FHWA-SA-96-078

U.S. Department
of Transportation
**Federal Highway
Administration**

Office of Engineering
Office of Technology Applications
400 7th Street, SW
Washington, DC

# URBAN DRAINAGE DESIGN MANUAL

## Hydraulic Engineering Circular No. 22



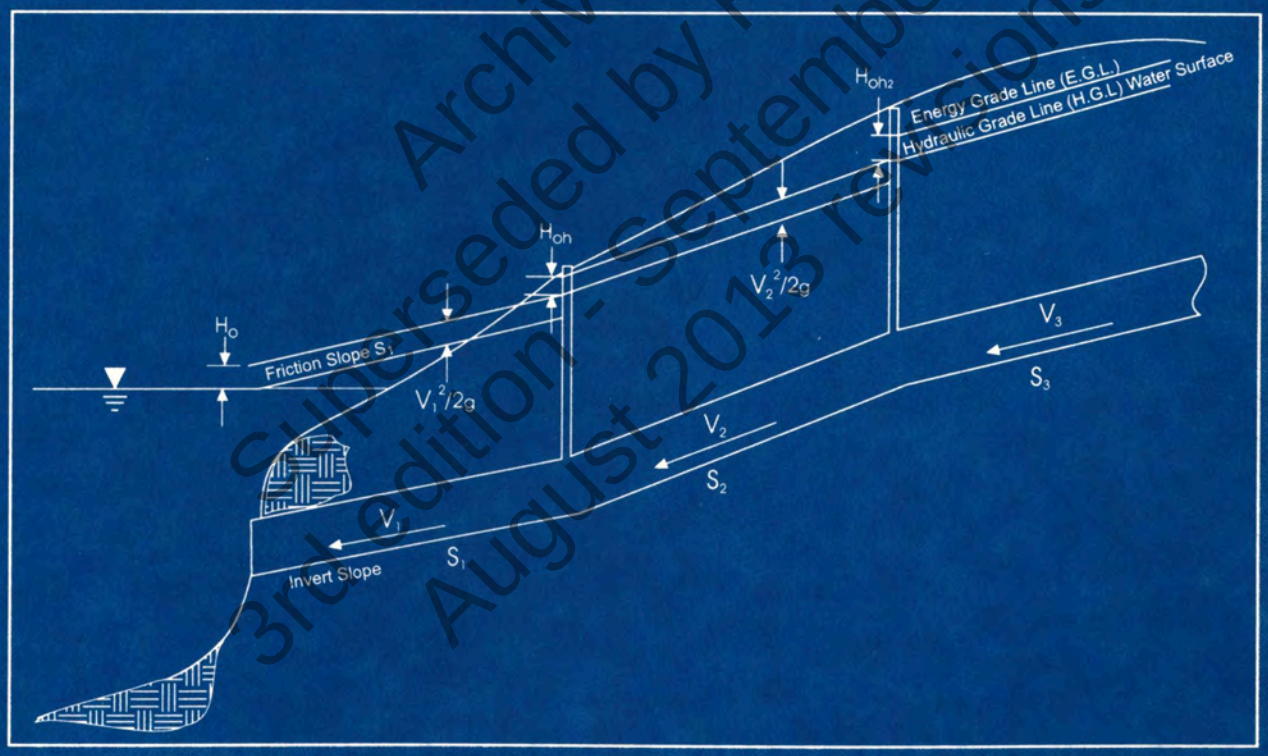


November 1996

Innovation Through Partnerships

Technical Report Documentation Page

| 1. Report No. | 2. Governmental Accession No. | 3. Recipient's Catalog No. |
|---|---|---|
| FHWA-SA-96-078 | | |

| 4. Title and Subtitle | 5. Report Date |
|---|---|
| Urban Drainage Design Manual<br>Hydraulic Engineering Circular 22 | November 1996 |
| | 6. Performing Organization Code |
| 7. Author(s)<br>S.A. Brown, S.M. Stein, J.C. Warner | 8. Performing Organization Report No. |
| 9. Performing Organization Name and Address<br>TVGA Engineering, Surveying, P.C.<br>State Route 2035<br>P.O. Box 197<br>Lanse, PA 16849-0197 | 10. Work Unit No. (TRAIS) |
| | 11. Contract or Grant No.<br>DTFH61-93-C-00096 |
| 12. Sponsoring Agency Name and Address<br>Federal Highway Administration<br>Office of Technology Applications, HTA-20<br>Office of Engineering, HNG-31<br>400 Seventh Street<br>Washington, D.C. 20590 | 13. Type of Report and Period Covered<br>Final Report<br>October 1994 - June 1996 |
| | 14. Sponsoring Agency Code |

15. Supplementary Notes

FHWA COTR: Christopher N. Dunn
Technical Assistance: Phil Thompson, Johnny Morris, Arlo Waddoups, Tom Krylowski

16. Abstract

This circular provides a comprehensive and practical guide for the design of storm drainage systems associated with transportation facilities. Design guidance is provided for the design of storm drainage systems which collect, convey, and discharge stormwater flowing within and along the highway right-of-way.
Methods and procedures are given for the hydraulic design of storm drainage systems. Design methods are presented for evaluating rainfall and runoff magnitude, pavement drainage, gutter flow, inlet design, median and roadside ditch flow, structure design, and storm drain piping. Procedures for the design of retention facilities and stormwater pump stations are also presented, along with a review of urban water quality practices. A summary of related public domain computer programs is also provided.



| 17. Key Words | 18. Distribution Statement |
|---|---|
| Storm Drain, Inlets, Storm Water Management, Water Quality, Best Management Practice Pumps, Drainage Design. | This document is available to the public from the National Technical Information Service, Springfield, Virginia 22151 |

| 19. Security Classif. (of this report) | 20. Security Classif. (of this page) | 21. No. of Pages | 22. Price |
|---|---|---|---|
| Unclassified | Unclassified | 478 | |

Form DOT F 1700.7 (8-72) Reproduction of completed page authorized

# SI* (MODERN METRIC) CONVERSION FACTORS

## APPROXIMATE CONVERSIONS TO SI UNITS

| Symbol | When You Know | Multiply By | To Find | Symbol |
|---|---|---|---|---|
| | **LENGTH** | | | |
| in | inches | 25.4 | millimeters | mm |
| ft | feet | 0.305 | meters | m |
| yd | yards | 0.914 | meters | m |
| mi | miles | 1.61 | kilometers | km |
| | **AREA** | | | |
| $in^2$ | square inches | 645.2 | square millimeters | $mm^2$ |
| $ft^2$ | square feet | 0.093 | square meters | $m^2$ |
| $yd^2$ | square yards | 0.836 | square meters | $m^2$ |
| ac | acres | 0.405 | hectares | ha |
| $mi^2$ | square miles | 2.59 | square kilometers | $km^2$ |
| | **VOLUME** | | | |
| fl oz | fluid ounces | 29.57 | milliliters | ml |
| gal | gallons | 3.785 | liters | l |
| $ft^3$ | cubic feet | 0.028 | cubic meters | $m^3$ |
| $yd^3$ | cubic yards | 0.765 | cubic meters | $m^3$ |

NOTE: Volumes greater than 1000 l shall be shown in $m^3$.

| Symbol | When You Know | Multiply By | To Find | Symbol |
|---|---|---|---|---|
| | **MASS** | | | |
| oz | ounces | 28.35 | grams | g |
| lb | pounds | 0.454 | kilograms | kg |
| T | short tons (2000 lb) | 0.907 | megagrams | Mg |
| | **TEMPERATURE (exact)** | | | |
| °F | Fahrenheit temperature | 5(F-32)/9 or (F-32)/1.8 | Celcius temperature | °C |
| | **ILLUMINATION** | | | |
| fc | foot-candles | 10.76 | lux | l |
| fl | foot-Lamberts | 3.426 | candela/$m^2$ | $cd/m^2$ |
| | **FORCE and PRESSURE or STRESS** | | | |
| lbf | poundforce | 4.45 | newtons | N |
| psi | poundforce per square inch | 6.89 | kilopascals | kPa |

## APPROXIMATE CONVERSIONS FROM SI UNITS

| Symbol | When You Know | Multiply By | To Find | Symbol |
|---|---|---|---|---|
| | **LENGTH** | | | |
| mm | millimeters | 0.039 | inches | in |
| m | meters | 3.28 | feet | ft |
| m | meters | 1.09 | yards | yd |
| km | kilometers | 0.621 | miles | mi |
| | **AREA** | | | |
| $mm^2$ | square millimeters | 0.0016 | square inches | $in^2$ |
| $m^2$ | square meters | 10.764 | square feet | $ft^2$ |
| $m^2$ | square meters | 1.195 | square yards | ac |
| ha | hectares | 2.47 | acres | $mi^2$ |
| $km^2$ | square kilometers | 0.386 | square miles | |
| | **VOLUME** | | | |
| ml | milliliters | 0.034 | fluid ounces | fl oz |
| l | liters | 0.264 | gallons | gal |
| $m^3$ | cubic meters | 35.71 | cubic feet | $ft^3$ |
| $m^3$ | cubic meters | 1.307 | cubic yards | $yd^3$ |

| Symbol | When You Know | Multiply By | To Find | Symbol |
|---|---|---|---|---|
| | **MASS** | | | |
| g | grams | 0.035 | ounces | oz |
| kg | kilograms | 2.202 | pounds | lb |
| Mg | megagrams | 1.103 | short tons (2000 lb) | T |
| | **TEMPERATURE (exact)** | | | |
| °C | Celcius temperature | 1.8C + 32 | Fahrenheit temperature | °F |
| | **ILLUMINATION** | | | |
| lx | lux | 0.0929 | foot-candles | fc |
| $cd/m^2$ | candela/$m^2$ | 0.2919 | foot-Lamberts | fl |
| | **FORCE and PRESSURE or STRESS** | | | |
| N | newtons | 0.225 | poundforce | lbf |
| kPa | kilopascals | 0.145 | poundforce per square inch | psi |

* SI is the symbol for the International System of Units. Appropriate rounding should be made to comply with Section 4 of ASTM E380.

(Revised August 1992)

## TABLE OF CONTENTS

TABLE OF CONTENTS (CONTINUED)

TABLE OF CONTENTS (CONTINUED)

TABLE OF CONTENTS (CONTINUED)

TABLE OF CONTENTS (CONTINUED)

TABLE OF CONTENTS (CONTINUED)

TABLE OF CONTENTS (CONTINUED)

**TABLE OF CONTENTS (CONTINUED)**

## LIST OF FIGURES

## LIST OF FIGURES (CONTINUED)

## LIST OF FIGURES (CONTINUED)

## LIST OF TABLES

## LIST OF CHARTS

## LIST OF SYMBOLS

| Symbol | Description | Units, S.I. (English) |
|---|---|---|
| a | Gutter depression | mm (in) |
| a | Regression constant | -- |
| A | Drainage area | ha (acres) |
| A | Cross sectional area of flow | $m^2$ ($ft^2$) |
| A | Minimum distance from back wall to trash rack | m (ft) |
| $A_c$ | Contributing drainage area | ha (acres) |
| $A_g$ | Clear opening area of the grate | $m^2$ ($ft^2$) |
| $A_k$ | Area | $km^2$ ($ft^2$) |
| $A_m$ | Area of watershed | ha ($mi^2$) |
| $A_o$, $A_i$ | Outlet and inlet storm drain cross-sectional areas | $m^2$ ($ft^2$) |
| $A_o$ | Orifice area | $m^2$ ($ft^2$) |
| b | Access hole or junction chamber diameter | m (ft) |
| b | Width of spillway | m (ft) |
| b,c,d | Regression coefficients | -- |
| B | Maximum distance between a pump and the back wall | m (ft) |
| B | Bottom width of channel | m (ft) |
| B | Cross-sectional area of flow of basin | $m^2$ ($ft^2$) |
| BDF | Basin development factor | -- |
| C | Average distance from floor to pump intake | m (ft) |
| C | Dimensionless runoff coefficient | -- |
| C | Flow-weighted mean concentration of the pollutant in urban runoff | mg/L |
| $C_B$ | Correction factor for benching of storm drainage structure | -- |
| $C_{BCW}$ | Broad-crested weir coefficient | 1.44 to 1.70 (2.61 to 3.08) |
| $C_d$ | Correction factor for flow depth in storm drainage structure | -- |
| $C_D$ | Correction factor for pipe diameter in storm drainage structure (pressure flow only) | -- |
| $C_o$ | Orifice coefficient | 0.4 - 0.6 |
| $C_{SP}$ | Discharge coefficient for spillway | 0.41 to 0.48 (2.45 to 2.83) |
| $C_p$ | Correction factor for plunging flow in a storm drainage structure | -- |
| $C_Q$ | Correction factor for relative flow in storm drainage structure | -- |
| $C_{SCW}$ | Sharp crested weir coefficient | 1.83 to 2.21 (3.32 to 4.01) |
| $C_w$ | Weir coefficient | |
| $C_0$, $C_1$, $C_2$ | Unit peak flow coefficients | -- |
| $C_1$, $C_2$, $C_3$ | Empirically derived coefficients that quantify portions of the energy loss based on the physical configuration of the access hole (power loss method) | |
| CN | Curve number | -- |
| d | Depth of flow | m (ft) |
| d | Trench depth | m (ft) |
| $d_c$ | Critical depth of flow in conduit | m (ft) |
| $d_i$ | Depth at lip of curb opening | m (ft) |
| $d_{ahi}$ | Water depth in access hole relative to the inlet pipe invert | m (ft) |
| $d_{aho}$ | Water depth in access hole above the outlet pipe invert | m (ft) |
| $d_o$ | Effective head on the center of the orifice throat | m (ft) |
| D | Pump, orifice, or storm drain diameter | m (ft) |
| D | Duration of excess rainfall (SCS UH method) | hr |
| D | Gutter depression | mm (in) |

## LIST OF SYMBOLS (CONTINUED)

| Symbol | Description | Units, S.I. (English) |
|---|---|---|
| D | Depth of ponding or basin | m (ft) |
| DHW | Design high water elevation | m (ft) |
| $D_i$ | Inflowing pipe diameter | m (ft) |
| $D_o$ | Outlet pipe diameter | m (ft) |
| $D_{50}$ | Mean riprap size | m (ft) |
| E | Efficiency of an inlet | percent |
| $E_o$ | Ratio of flow in a chosen width (usually the width of a grate) to total gutter flow = $(Q_w/Q)$ | -- |
| $E_t$ | Total energy | m (ft) |
| $\Delta E$ | Total energy lost | m (ft) |
| $\Delta E_p$ | Total power lost as power passes through the access hole | |
| f | Floor-configuration coefficient (power loss method) | |
| $f_c$ | Infiltration rate | mm/hr (in/hr) |
| $F_p$ | Adjustment factor for pond and swamp areas | -- |
| $F_r$ | Froude number | -- |
| g | Acceleration due to gravity | 9.81 m/s$^2$ (32.2 ft/s$^2$) |
| $G_i$ | Grade of roadway | percent |
| h | Height of curb-opening inlet | m (ft) |
| h | Vertical distance of plunging flow from the flow line of the higher elevation inlet pipe to the center of the outflow pipe. | m (ft) |
| $h_L$ | Head or energy loss | m (ft) |
| $h_o$, $h_i$ | Outlet and inlet velocity heads | m (ft) |
| H | Wetted pipe length | m (ft) |
| H | Head above weir crest excluding velocity head | m (ft) |
| $H_{ah}$ | Head loss at access holes or inlet structures | m (ft) |
| $H_c$ | Height of weir crest above channel bottom | m (ft) |
| $H_f$ | Friction loss | m (ft) |
| $H_j$ | Junction loss | m (ft) |
| $H_l$ | Losses through fittings, valves, etc. | m (ft) |
| $H_o$ | Head measured from centroid of orifice to the water surface elevation | m (ft) |
| $H_p$ | Loss due to friction in water passing through a pump, valves, fittings, etc. | m (ft) |
| $H_p$ | Effective head on the emergency spillway | m (ft) |
| $H_s$ | Maximum static head | m (ft) |
| $H_t$ | Storage depth | m (ft) |
| $H_v$ | Velocity head | m (ft) |
| $H_x$ | Depth for storage volume | m (ft) |
| $HGL_i$ | Hydraulic grade line elevation at the inflow pipe | m (ft) |
| $HGL_o$ | Hydraulic grade line elevation relative to the outlet pipe invert | m (ft) |
| I | Rainfall intensity | mm/hr (in/hr) |
| I | Degree of site imperviousness (equation 10-2) | percent |
| I | Inflow | m$^3$/s (ft$^3$/s) |
| $I_a$ | Initial abstraction (average = 0.2 $S_R$) | mm (in) |
| IA | Percentage of basin occupied by impervious surfaces | percent |
| INV | Inlet invert elevation | m (ft) |
| k | Intercept coefficient | -- |
| K | Vertical curve constant | m/percent (ft/percent) |

## LIST OF SYMBOLS (CONTINUED)

| Symbol | Description | Units, S.I. (English) |
|---|---|---|
| $K$ | Conveyance | $m^3/s$ ($ft^3/s$) |
| $K$ | Adjusted loss coefficient for storm drain inlet structure | -- |
| $K_{aho}$ | Approximate access-hole loss coefficient | -- |
| $K_b$ | Shear stress parameter (function of $R_c/B$) | -- |
| $K_c$ | Units conversion factor or coefficient | |
| $K_c$ | Storm drain contraction coefficient (0.5 $K_e$) | -- |
| $K_e$ | Expansion coefficient | -- |
| $K_o$ | Initial head loss coefficient based on relative access hole size | -- |
| $K_1$ | Ratio of side to bottom shear stress of a trapezoidal channel | -- |
| $K_2$ | Ratio of side to bottom tractive force of a trapezoidal channel | -- |
| $L$ | Horizontal length of curve, flow length, length of basin at base length of pipe, weir length, or length of wet well | m (ft) |
| $L$ | Pollutant load | kg |
| $L_M$ | Main channel length for USGS Nationwide Urban Hydrograph | km (mi) |
| $L_p$ | Length of increased shear stress due to the bend | m (ft) |
| $L_T$ | Curb opening length required to intercept 100 percent of the gutter flow | m (ft) |
| $M$ | Cross-sectional area of flow at midsection of basin | $m^2$ ($ft^2$) |
| $n$ | Manning's roughness coefficient | -- |
| $n$ | Porosity of the backfilled material (dimensionless: void volume/total volume) | -- |
| $n_b$ | Manning's roughness in the channel bend | -- |
| $O$ | Outflow | $m^3/s$ ($ft^3/s$) |
| $N$ | Number of equal size pumps | -- |
| $P$ | Depth of precipitation | mm (in) |
| $P$ | Perimeter of the grate disregarding the side against the curb | m (ft) |
| $P$ | Wetted perimeter | m (ft) |
| $P$ | Pasch | -- |
| $PWR_i$ | Inflow power supplied into the access hole by each inflow line | |
| $PWR_o$ | Outflow power leaving the access hole | |
| $P_j$ | Correction factor for storms that produce no flow (equation 10-1) | |
| $q_a$ | Adjusted peak flow | $m^3/s$ |
| $q_p$ | Peak flow | $m^3/s$ |
| $q_u$ | Unit peak flow | $m^3/s/km^2/mm$ |
| $Q$ | Flow | $m^3/s$ ($ft^3/s$) |
| $Q_b$ | Bypass flow | $m^3/s$ ($ft^3/s$) |
| $Q_D$ | Depth of direct runoff | mm (in) |
| $Q_i$ | Inflow, peak inflow rate, or inlet interception flow capacity | $m^3/s$ ($ft^3/s$) |
| $Q_i$ | Inlet interception flow capacity | $m^3/s$ ($ft^3/s$) |
| $Q_{ic}$ | Interception capacity of curb | $m^3/s$ ($ft^3/s$) |
| $Q_{ig}$ | Interception capacity of grate | $m^3/s$ ($ft^3/s$) |
| $Q_o$, $Q_i$, $Q_l$ | Outlet, inlet, and lateral flows respectively | $m^3/s$ ($ft^3/s$) |
| $Q_o$ | Peak flow rate out of the detention basin | $m^3/s$ ($ft^3/s$) |
| $Q_p$ | Peak discharge rate (total capacity of all pumps) | $m^3/s$ ($ft^3/s$) |
| $Q_s$ | Submerged flow | $m^3/s$ ($ft^3/s$) |
| $Q_r$ | Free flow | $m^3/s$ ($ft^3/s$) |
| $Q_s$ | Flow capacity of the gutter section above the depressed section | $m^3/s$ ($ft^3/s$) |
| $Q_w$ | Flow rate in the depressed section of the gutter | $m^3/s$ ($ft^3/s$) |

## LIST OF SYMBOLS (CONTINUED)

| Symbol | Description | Units, S.I. (English) |
|---|---|---|
| r | Ratio of width to length of basin at the base | -- |
| r | Pipe radius | m (ft) |
| R | Hydraulic radius (flow area divided by the wetted perimeter) | m (ft) |
| $R_c$ | Radius to centerline of open channel | m (ft) |
| $R_f$ | Ratio of frontal flow intercepted to total frontal flow | -- |
| RI2 | Rainfall intensity for 2-h, 2-yr recurrence | (in/hr) |
| $RQ_T$ | T-yr rural peak flow | ($ft^3/s$) |
| $R_s$ | Ratio of side flow intercepted to total side flow (side flow interception efficiency) | -- |
| $R_v$ | Runoff coefficient (equation 10-1) | |
| S | Minimum submergence at the intake of a pump | m (ft) |
| S | Surface slope | m/m (ft/ft) |
| $S_c$ | Critical slope | m/m (ft/ft) |
| $S_e$ | Equivalent cross slope | m/m (ft/ft) |
| $S_f$ | Friction slope | m/m (ft/ft) |
| $S_L$ | Longitudinal slope | m/m (ft/ft) |
| $S_o$ | Energy grade line slope | m/m (ft/ft) |
| $S_p$ | Slope | percent |
| $S_R$ | Retention | mm (in) |
| $S'_w$ | Cross slope of the gutter measured from the cross slope of the pavement | m/m (ft/ft) |
| $S_w$ | Cross slope of the depressed gutter | m/m (ft/ft) |
| $S_x$ | Cross slope | m/m (ft/ft) |
| SL | Main channel slope | m/km (ft/mi) |
| ST | Basin Storage (percentage of basin occupied by lakes, reservoirs, swamps, and wetlands) | percent |
| t | Travel time in the gutter | min |
| $t_b$ | Time duration of the Unit Hydrograph | hr |
| $t_c$ | Time of concentration | hr |
| $t_c$ | Minimum allowable cycle time of a pump | min |
| $t_i$ | Duration of basin inflow | min |
| $t_p$ | Time to peak of the hydrograph | hr or s |
| $t_r$ | Time of recession (SCS UH method) | hr |
| T | Width of flow (spread) | m (ft) |
| T | Surface width of open channel flow | m (ft) |
| T' | Hypothetical spread that is correct if it is contained within $S_{x1}$ and $S_{x2}$ | m (ft) |
| $T_L$ | Lag time from the centroid of the unit rainfall excess to the peak of the unit hydrograph | hr |
| $T_R$ | Duration of unit excess rainfall (Snyder UH Method) | hr |
| $T_s$ | Width of spread from the junction of the gutter and the road to the limit of the spread | m (ft) |
| TDH | Total dynamic head | m (ft) |
| $T_s$ | Detention basin storage time | hr |
| $T_w$ | Width of circular gutter section | m (ft) |
| $T_{ti}$ | Travel time | min |

## LIST OF SYMBOLS (CONTINUED)

| Symbol | Description | Units, S.I. (English) |
|---|---|---|
| $UQ_T$ | Urban peak discharge for T-yr recurrence interval | $ft^3/s$ |
| V | Velocity | m/s (ft/s) |
| V | Storage volume | $m^3$ ($ft^3$) |
| $V_c$ | Critical velocity | m/s (ft/s) |
| $V_d$ | Channel velocity downstream of outlet | m/s (ft/s) |
| $V_o$ | Gutter velocity where splash-over first occurs | m/s (ft/s) |
| $V_o$ | Average storm drain outlet velocity | m/s (ft/s) |
| $V_o$, $V_i$, $V_l$ | Outlet, inlet, and lateral velocities, respectively | m/s (ft/s) |
| $V_r$ | Voids ratio | -- |
| $V_r$ | Inflow volume of runoff | ha-mm (ac-ft) |
| $V_s$ | Storage volume estimate | $m^3$ ($ft^3$) |
| $V_t$ | Total cycling storage volume | $m^3$ ($ft^3$) |
| $V_x$ | Individual pump cycling volumes | $m^3$ ($ft^3$) |
| $V_1$ | Velocity upstream of transition | m/s (ft/s) |
| $V_2$ | Velocity downstream of transition | m/s (ft/s) |
| W | Minimum required distance between pumps | m (ft) |
| W | Width of gutter or width of basin at base | m (ft) |
| $W_{50}$, $W_{75}$ | Time width of Snyder Unit Hydrograph at discharge equal to 50 percent and 75 percent, respectively | hr |
| w | Trench width | m (ft) |
| y | Flow depth | m (ft) |
| Y | Minimum level floor distance upstream of pump | m (ft) |
| Z | Elevation above a given datum | m (ft) |
| z | Horizontal distance for side slope of trapezoidal channel | m (ft) |
| $\alpha$ | Angle | radians |
| $\alpha_1$ | Contraction-loss coefficient (power loss method) | |
| $\alpha_{2,i}$ | Expansion-loss coefficient for each submerged inflow pipe, i (power loss method) | |
| $\alpha_{3,j}$ | Potential-loss coefficient for plunging inflow pipe, j (power loss method) | |
| $\alpha_{4,j}$ | Expansion-loss coefficient for each plunging inflow pipe, j (power loss method) | |
| $\beta$ | Inflow-angle adjustment coefficient (power loss method) | |
| $\Delta$ | Angle of curvature in degrees | |
| $\Delta d$ | Water surface elevation difference in a channel bend | m (ft) |
| $\Delta S$ | Change in storage | $m^3$ ($ft^3$) |
| $\Delta t$ | Time interval | min |
| $\gamma$ | Unit weight of water (at 15.6 °C (60 °F)) | 9810 $N/m^3$ (62.4 $lb/ft^3$) |
| $\tau$ | Average shear stress | Pa ($lb/ft^2$) |
| $\tau_b$ | Bend shear stress | Pa ($lb/ft^2$) |
| $\tau_d$ | Maximum shear stress | Pa ($lb/ft^2$) |
| $\tau_p$ | Permissible shear stress | Pa ($lb/ft^2$) |
| $\Theta$ | Angle between the inflow and outflow pipes | degrees |
| $\theta$ | Angle of v-notch | degrees |

# 1. INTRODUCTION

This circular provides a comprehensive and practical guide for the design of storm drainage systems associated with transportation facilities. Design guidance is provided for the design of storm drainage systems which collect, convey, and discharge stormwater flowing within and along the highway right-of-way. As such, this circular covers the design of most types of highway drainage. Two exceptions to this are the design of cross-drainage facilities such as culverts and bridges, and subsurface drainage design. Guidance for the design of cross-drainage facilities is provided in *HDS-1, Hydraulics of Bridge Waterways* [1], *HDS-5, Hydraulic Design of Highway Culverts* [2], as well as the *AASHTO Highway Drainage Guidelines Volume IV* [3] and *Volume VII* [4]. Subsurface drainage design is covered in detail in *Highway Subdrainage Design* [5].

Methods and procedures are given for the hydraulic design of storm drainage systems. Design methods are presented for evaluating rainfall and runoff magnitude, pavement drainage, gutter flow, inlet design, median and roadside ditch flow, structure design, and storm drain piping. Procedures for the design of retention and detention facilities and stormwater pump stations are also presented, along with a review of urban water quality practices. A summary of related public domain computer programs is also provided.

The reader is assumed to have an understanding of basic hydrologic and hydraulic principles. Detailed coverage of these subjects is available in *HDS-2, Hydrology* [6], *HDS-4, Introduction to Highway Hydraulics* [7], *Design and Construction of Urban Stormwater Management Systems* [8], as well as basic hydrology and hydraulic text books.

This document consists of ten (10) additional chapters and six (6) appendices. The ten chapters cover System Planning, Urban Hydrologic Procedures, Pavement Drainage, Roadside and Median Channels, Structures, Storm Drains, Stormwater Quantity Control Facilities, Pump Stations, Urban Water Quality Practices, and a Summary of Related Computer Programs. Appendixes include: Appendix A, Design Charts; Appendix B, Computer Solutions to Design Examples; Appendix C, Gutter Flow Relationship Development; Appendix D, Power Loss Methodology for Storm Drainage Design; Appendix E, Glossary of Terms; and Appendix F, Literature Reference.

Several illustrative design examples are developed throughout the document. By following the design examples, the reader is led through the design of a complete stormwater management system. In the main body of the manual, all procedures are presented using hand computations. Computer solutions to the design examples are presented in Appendix B.

# 2. SYSTEM PLANNING

Storm drainage design is an integral component in the design of highway and transportation networks. Drainage design for highway facilities must strive to maintain compatibility and minimize interference with existing drainage patterns, control flooding of the roadway surface for design flood events, and minimize potential environmental impacts from highway related storm water runoff. To meet these goals, the planning and coordination of storm drainage systems must begin in the early planning phases of transportation projects.

System planning, prior to commencement of design, is essential to the successful development of a final storm drainage design. Successful system planning will result in a final system design that evolves smoothly through the preliminary and final design stages of the transportation project.

## 2.1 DESIGN OBJECTIVES

The objective of highway storm drainage design is to provide for safe passage of vehicles during the design storm event. The drainage system is designed to **collect** stormwater runoff from the roadway surface and right-of-way, **convey** it along and through the right-of-way, and **discharge** it to an adequate receiving body without causing adverse on- or off-site impacts.

Stormwater collection systems must be designed to provide adequate surface drainage. Traffic safety is intimately related to surface drainage. Rapid removal of stormwater from the pavement minimizes the conditions which can result in the hazards of hydroplaning. Surface drainage is a function of transverse and longitudinal pavement slope, pavement roughness, inlet spacing, and inlet capacity.

The objective of stormwater conveyance systems (storm drain piping, ditches and channels, pumps, etc.) is to provide an efficient mechanism for conveying design flows from inlet locations to the discharge point without surcharging inlets or otherwise causing surface flooding. Erosion potential must also be considered in the design of open channels or ditches used for stormwater conveyance.

The design of appropriate discharge facilities for stormwater collection and conveyance systems include consideration of stormwater quantity and quality. Local, State, and/or Federal regulations often control the allowable quantity and quality of stormwater discharges. To meet these regulatory requirements, storm drainage systems will usually require detention or retention basins, and/or other best management practices for the control of discharge quantity and quality.



## 2.2 DESIGN APPROACH

The design of storm drainage systems is a process which evolves as an overall highway design develops. The primary elements of the process include data collection, agency coordination, preliminary concept development, concept refinement and design, and final design documentation. Each of these elements is briefly described in the following:

**Step 1. Data Collection**

This step involves assembling and reviewing technical data and background information as necessary to perform the design. Data requirements are outlined in section 2.3.

**Step 2. Agency Coordination**

This step includes coordination with regulatory and other impacted or interested agencies or groups. Additional information on agency coordination is provided in section 2.4.

**Step 3. Preliminary Concept Development**

This step involves the development of a preliminary sketch plan and layout for the proposed storm drainage system. Section 2.6 provides additional information on the development of the preliminary concept plan.

**Step 4. Concept Refinement; Hydrologic and Hydraulic Design**

This step comprises the primary design phase which generally proceeds in the following sequence:

1. Computation of runoff parameters and quantities based on the preliminary concept layout (see chapter 3).

2. Refine inlet location and spacing (see chapter 4).

3. Refine the storm drain system layout including access holes, connecting mains, outfall control structures, and any other system components (see chapter 6).

4. Size pipes, channels, pump stations, discharge control structures, and other storm drain system components (see chapters 5, 7, 8, 9, and 10).

5. Compute and review the hydraulic grade line (see chapter 7).

6. Revise plan and recompute design parameters as necessary.

Through this step the design of the storm drainage system will evolve from the preliminary concept stage to final design as a continuing process. Several levels of system refinement are usually required in response to design changes in the overall transportation process, and input from regulatory and review agencies.

**Step 5. Final Design Documentation**

This step includes the preparation of final documentation for the design files and construction plans. Final design documentation requirements are typically defined by the sponsoring agency, and can vary depending on project scope. A detailed discussion of final design documentation is beyond the scope of this document. The interested reader is referred to Chapter 4, Documentation, of the AASHTO Model Drainage Manual [9], or the local Department of Transportation Drainage Design Manual for a detailed description of the design documentation. A listing of general documentation to be provided in the final design follows:

1. Hydrology

- Contributing watershed size and identification of source (map name, etc).
- Design frequency and decision for selection.
- Hydrologic discharge and hydrograph estimating method and findings.

- Flood frequency curves to include design, chosen peak discharge, discharge hydrograph, and any historical floods.
- Expected level of development in upstream watershed over the anticipated life of the facility (include sources of, and basis for these development projections).

2. Open Channels

- Stage discharge curves for the design, peak discharge, and any historical water surface elevations.
- Cross section(s) used in the design water surface determinations and their locations.
- Roughness coefficient assignments ("n" values).
- Methods used to obtain the design water surface elevations.
- Design or analysis of materials proposed for the channel bed and banks.

3. Storm Drains

- Computations for inlets and pipes (including hydraulic grade lines).
- Complete drainage area map.
- Design Frequency.
- Information concerning outfalls, existing storm drains, and other design considerations.
- A schematic indicating storm drain system layout.

4. Pump Stations

- Inflow design hydrograph from drainage area to pump.
- Maximum allowable headwater elevations and related probable damage.
- Starting sequence and elevations.
- Sump dimensions.
- Available storage amounts.
- Pump sizes and operations.
- Pump calculations and design report.
- Mass curve routing diagram.



## 2.3 DATA REQUIREMENTS

The design of storm drainage systems requires the accumulation of certain basic data including the following information :

**Watershed mapping** identifying topographic features, watershed boundaries, existing drainage patterns, and ground cover. Information sources include USGS quadrangle maps, field surveys, aerial photography, or mapping available from local river authorities, drainage districts, or other planning agencies.

**Land use mapping** identifying existing and expected future land uses. This information is typically available from local zoning or planning agencies.

**Soils maps** identifying soil types and hydrologic soil groups. This information is available in county soil surveys which can be obtained from the local U.S. Department of Agriculture, National Resources Conservation Service (NRCS) offices.

**Flood histories and highwater mark elevations.** Information of this type may be available from local offices of the U.S. Geological Survey, National Weather Service, Federal Emergency Management Agency, U.S. Army Corps of Engineers, and/or local planning agencies, river authorities or drainage districts. Local residents or DOT regional or district maintenance offices may also be able to provide this information.

**Descriptions of existing drainage facilities** including size, shape, material, invert information, age, condition, etc. As-built information for existing drainage facilities may be available from the local owner of the facility. If unavailable, field surveys will need to be performed to obtain this information.

**Design and performance data for existing drainage systems.** This information may be available from the local owner of the facility. If the information is not available for the existing system, it will be necessary for the designer to develop the needed information to define how the existing system will function under the new loading.

**Utility plans and descriptions.** Available from utility owner. If unavailable, field surveys may need to be performed to determine critical design information.

**Existing right-of-way information.** Available from appropriate highway agency right-of-way office, or local tax maps.

**Federal, state, and local regulatory requirements.** Information is available from local regulatory agencies. Typical regulatory authorities include the U.S. Army Corps of Engineers, U.S. Environmental Protection Agency, State Departments of Environmental Regulation, and local governments. Typical regulatory considerations are discussed in the section 2.5.



## 2.4 AGENCY COORDINATION

Prior to the design of a storm drainage system, it is essential to coordinate with regulatory agencies or others that have interests in drainage matters. Regulatory agency involvement may come from any level of government (federal, state, or local). The concerns of these agencies are generally related to potential impacts resulting from highway drainage, and center on stormwater quantity and quality issues. Regulatory concerns are discussed in section 2.5.

Others with interests in storm drainage systems include local municipalities, and developers. Local municipalities may desire to use portions of the highway storm drainage system to provide for new or better drainage, or to augment old municipal drainage systems. Local municipalities may be interested in developing cooperative projects where a mutual economic benefit may exist. Local municipalities may also be aware of proposed private development in the vicinity of the road project which may impact drainage design. These groups may wish to improve or change drainage patterns, redirect stormwater to the right-of-way, or propose joint projects which could require the highway storm drainage system to carry water for which it would not usually be designed. Early planning and coordination is required to identify and coordinate cooperative projects.

Also important are the concerns of citizens who fear that the drainage facility might impact their business or home. Citizen concerns typically include the highway's interruption and redirection of existing drainage patterns, the potential for flow concentration and increased flooding, and water quality

impacts to both surface and ground water. Communication and coordination with local citizens is usually accomplished through local government entities and the public hearing process.

## 2.5 REGULATORY CONSIDERATIONS

The regulatory environment related to drainage design is ever changing and continues to grow in complexity. Engineers responsible for the planning and design of drainage facilities must be familiar with federal, state, and local regulations, laws, and ordinances which may impact the design of storm drain systems. A detailed discussion of the legal aspects of highway drainage design including a thorough review of applicable laws and regulations is included in AASHTO's Highway Drainage Guidelines, Volume V [10] and AASHTO's Model Drainage Manual, Chapter 2 [11]. Some of the more significant federal, state, and local regulations affecting highway drainage design are summarized in the following:

### 2.5.1 Federal Regulations

The following federal laws may affect the design of highway storm drainage systems. The highway drainage engineer should be familiar with these laws and any associated regulatory procedures.

**The Fish and Wildlife Act of 1956 (16 U.S.C. 742a et seq.), the Migratory Game-Fish Act (16 U.S.C. 760c-760g) and the Fish and Wildlife Coordination Act (16 U.S.C. 661-666c)** express the concern of congress with the quality of the aquatic environment as it affects the conservation, improvement and enjoyment of fish and wildlife resources. The Fish and Wildlife Service's role in the permit review process is to review and comment on the effects of a proposal on fish and wildlife resources. Highway storm drainage design may impact streams or other channels which fall under the authority of these acts.

**The National Environmental Policy Act of 1969 (NEPA) (42 U.S.C. 4321-4347)** declares the national policy to promote efforts which will prevent or eliminate damage to the environment and biosphere, stimulate the health and welfare of man, and to enrich the understanding of the ecological systems and natural resources important to the Nation. NEPA, and its implementing guidelines from the Council on Environmental Quality and the Federal Highway Administration affect highway drainage design as it relates to impacts on water quality and ecological systems.

**Section 401 of the Federal Water Pollution Control Act Amendments of 1972 (FWPCA-401) (Section 401, PL 92-500, 86 Stat. 816, 33 U.S.C. 1344)** prohibits discharges from point sources unless covered by a National Pollutant Discharge Elimination System (NPDES) permit. These permits are issued under authority of section 402 of the Act, and must include the more stringent of either technology-based standards and water quality based standards. The NPDES program regulations are found at 40 CFR 122-125. These regulations govern how EPA and authorized States write NPDES permits by outlining procedures on how permits shall be issued, what conditions are to be included, and how the permits should be enforced.

**Section 402(p) of the Federal Water Pollution Control Act Amendments of 1972 (FWPCA-402p) (Section 402p, PL 92-500, 86 Stat. 816, 33 U.S.C. 1344)** requires the Environmental Protection Agency (EPA) to establish final regulations governing storm water discharge permit application requirements under the NPDES program. The permit application requirements include storm water discharges associated with industrial activities. Highway construction and maintenance are classified as industrial activities.

**Water Quality Act of 1987 : Amendment of Section 402(p) of the Federal Water Pollution Control Act Amendments of 1972 (FWPCA-402p) (Section 402p, PL 92-500, 86 Stat. 816, 33 U.S.C. 1344)** provides a comprehensive framework for EPA to develop a phased approach to regulating storm water discharges under the NPDES program for storm water discharges associated with industrial activity (including construction activities). The Act clarified that permits for discharges of storm water associated with industrial activity must meet all of the applicable provisions of section 402 and section 301, including technology and water quality-based standards. The classes of diffuse sources of pollution include urban runoff, construction activities, separate storm drains, waste disposal activities, and resource extraction operations which all correlate well with categories of discharges covered by the NPDES storm water program.

**Section 404 of the Federal Water Pollution Control Act Amendments of 1972 (FWPCA-404) (Section 404, PL 92-500, 86 Stat. 816, 33 U.S.C. 1344)** prohibits the unauthorized discharge of dredged or fill material in navigable waters. The instrument of authorization is termed a permit, and the Secretary of the Army, acting through the Chief of Engineers, U.S. Army Corps of Engineers, has responsibility for the administration of the regulatory program. The definition of navigable waters includes all coastal waters, navigable waters of the United States to their headwaters, streams tributary to navigable waters of the United States to their headwaters, inland lakes used for recreation or other purposes which may be interstate in nature, and wetlands contiguous or adjacent to the above waters. A water quality certification is also required for these activities.

**Coastal Zone Management Act of 1972 (PL 92-583, amended by PL94-310; 86 Stat. 1280, 16 U.S.C. 145, et seq.)** declares a national policy to preserve, protect, develop, and restore or enhance the resources of the nation's coastal zone, and to assist states in establishing management programs to achieve wise use of land and water resources, giving full consideration to ecological, cultural, historic, and aesthetic values as well as to the needs of economic development. The development of highway storm drainage systems in coastal areas must comply with this act in accordance with state coastal zone management programs.

**The Coastal Zone Act Reauthorization Amendments of 1990 (CZARA)** specifically charged state coastal programs (administered under federal authority by NOAA), and state nonpoint source programs (administered under federal authority by EPA), to address nonpoint source pollution issues affecting coastal water quality. The guidance specifies economically achievable management measures to control the addition of pollutants to coastal waters for sources of nonpoint pollution through the application of the best available nonpoint pollution control practices, technologies, processes, siting criteria, operating methods, or other alternatives.

**The Safe Water Drinking Act of 1974**, as amended, includes provisions for requiring protection of surface water discharges in areas designated as sole or principal source aquifers. Mitigation of activities that may contaminate the aquifer (including highway runoff) are typically required to assure federal funding of the project, which may be withheld if harm to the aquifer occurs.

### 2.5.2 State Regulations

In addition to the above mentioned federal laws, the design of storm drainage systems must also comply with state laws and regulations. State drainage law is derived from both common and statutory law. A summary of applicable state drainage laws originating from common law, or court-made law, and statutory law follow. It is noted that this is a generalized summary of common state drainage law. Drainage engineers should become familiar with the application of these legal principles in their states.

**The Civil Law Rule of Natural Drainage** is based upon the perpetuation of natural drainage. A frequently quoted statement of this law is:

> "... every landowner must bear the burden of receiving upon his land the surface water naturally falling upon land above it and naturally flowing to it therefrom, and he has the corresponding right to have the surface water naturally falling upon his land or naturally coming upon it, flow freely therefrom upon the lower land adjoining, as it would flow under natural conditions. From these rights and burdens, the principle follows that he has a lawful right to complain of others, who, by interfering with natural conditions, cause such surface water to be discharged in greater quantity or in a different manner upon his land, than would occur under natural conditions....." *(Heier v. Krull. 160 Cal 441 (1911))*

This rule is inherently strict, and as a result has been modified to some degree in many states.

**The Reasonable Use Rule** states that the possessor of land incurs liability only when his harmful interference with the flow of surface waters is unreasonable. Under this rule, a possessor of land is legally privileged to make a reasonable use of his land even though the flow of surface waters is altered thereby and causes some harm to others. The possessor of land incurs liability, however, when his harmful interference with the flow of surface waters is unreasonable.

**Stream Water Rules** are founded on a common law maxim which states "water runs and ought to run as it is by natural law accustomed to run." Thus, as a general rule, any interference with the flow of a natural watercourse to the damage of another will result in liability. Surface waters from highways are often discharged into the most convenient watercourse. The right is unquestioned if those waters were naturally tributary to the watercourse and unchallenged if the watercourse has adequate capacity. However, if all or part of the surface waters have been diverted from another watershed to a small watercourse, any lower owner may complain and recover for ensuing damage.

**Eminent Domain** is a statutory law giving public agencies the right to take private property for public use. This right can be exercised as a means to acquire the right to discharge highway drainage across adjoining lands when this right may otherwise be restricted. Whenever the right of eminent domain is exercised, a requirement of just compensation for property taken or damaged must be met.

**Agricultural Drainage Laws** have been adopted in some states. These laws provide for the establishment, improvement, and maintenance of ditch systems. Drainage engineers may have to take into consideration agricultural laws that may or may not permit irrigation waste water to drain into the highway right-of-way. If the drainage of irrigated agricultural lands into roadside ditches is permitted, excess irrigation water may have to be provided for in the design of the highway drainage system.

**Environmental Quality Acts** have been enacted by many states promoting the enhancement and maintenance of the quality of life. Hydraulic engineers should be familiar with these statutes.

### 2.5.3 Local Laws

Many governmental subdivisions have adopted ordinances and codes which impact drainage design. These include regulations for erosion control, best management practices, and stormwater detention.

**Erosion Control Regulations** set forth practices, procedures, and objectives for controlling erosion from construction sites. Cities, counties, or other government subdivisions commonly have erosion

control manuals that provide guidance for meeting local requirements. Erosion control measures are typically installed to control erosion during construction periods, and are often designed to function as a part of the highway drainage system. Additionally, erosion control practices may be required by the regulations governing storm water discharge requirements under the NPDES program. These erosion and sediment control ordinances set forth enforceable practices, procedures, and objectives for developers and contractors to control sedimentation and erosion by setting specific requirements which may include adherence to limits of clearing and grading, time limit or seasonal requirements for construction activities to take place, stabilization of the soil, and structural measures around the perimeter of the construction site.

**Best Management Practice (BMP) Regulations** set forth practices, procedures, and objectives for controlling stormwater quality in urbanizing areas. Many urban city or county government bodies have implemented BMP design procedures and standards as a part of their land development regulations. The design and implementation of appropriate BMP's for controlling stormwater runoff quality in these areas must be a part of the overall design of highway storm drainage systems. Additionally, the NPDES permit program for storm water management addresses construction site runoff by the use of self-designed Storm Water Pollution Prevention Plans. These plans are based upon three main types of BMPs: those that prevent erosion, others which prevent the mixing of pollutants from the construction site with storm water, and those which trap pollutants before they can be discharged. All three of these BMPs are designed to prevent, or at least control, the pollution of storm water before it has a chance to affect receiving streams.

**Stormwater Detention Regulations** set forth practices, procedures, and objectives for controlling stormwater quantity through the use of detention basins or other controlling facilities. The purpose of these facilities is to limit increases in the amount of runoff resulting from land development activities. In some areas, detention facilities may be required as a part of the highway storm drainage system. Detention and retention basins must generally meet design criteria to control the more frequent storms and to safely pass larger storm events. Stormwater management may also include other measures to reduce the rate of runoff from a developed site, such as maximizing the amount of runoff that infiltrates back into the ground.



## 2.6 PRELIMINARY CONCEPT DEVELOPMENT

Layout and design of a storm drainage system begins with the development of sketches or schematics identifying the basic components of the intended design. This section provides an overview of the concepts involved in the development of a preliminary concept plan.

### 2.6.1 Base Map

The first step in the development of a concept storm drainage plan is preparation of a project base map. The base map should identify the watershed areas and subareas, land use and cover types, soil types, existing drainage patterns, and other topographic features. This base information is then supplemented with underground utility locations (and elevations if available), a preliminary roadway plan and profile, and locations of existing and proposed structures.

### 2.6.2 Major vs. Minor Systems

A complete storm drainage system design includes consideration of both major and minor drainage systems. The minor system, sometimes referred to as the "Convenience" system, consists of the components that have been historically considered as part of the "storm drainage system". These components include curbs, gutters, ditches, inlets, access holes, pipes and other conduits, open channels, pumps, detention basins, water quality control facilities, etc. The minor system is normally designed to carry runoff from 10 year frequency storm events.

The major system provides overland relief for stormwater flows exceeding the capacity of the minor system. This usually occurs during more infrequent storm events, such as the 25-, 50-, and 100-year storms. The major system is composed of pathways that are provided - knowingly or unknowingly -for the runoff to flow to natural or manmade receiving channels such as streams, creeks, or rivers [12]. The designer should determine (at least in a general sense) the flow pathways and related depths and velocities of the major system under less frequent or check storm conditions (typically a 100 year event is used as the check storm).

Historically, storm drainage design efforts have focused on components of the minor system with little attention being paid to the major system. Although the more significant design effort is still focused on the minor system, lack of attention to the supplementary functioning of the major storm drainage system is no longer acceptable.



### 2.6.3 Concept Plan

With the preliminary base map completed and the difference between the major and minor system components determined, a conceptual storm drainage plan can be prepared. The development of this plan includes consideration of both major and minor drainage systems and should consist of the following preliminary activities:

1. Locate and space inlets.
2. Locate main outfall.
3. Locate storm mains and other conveyance elements.
4. Define detention strategy and storage locations.
5. Define water quality control strategy and facility locations.
6. Define elements of major drainage system.

With this sketch, or schematic, the designer will be able to proceed with the detailed process of storm drainage design calculations, adjustments, and refinements as defined in Step 4 of the design approach.

### 2.6.4 System Components

The components of minor storm drainage systems can be categorized by function as those which **collect** stormwater runoff from the roadway surface and right-of-way, **convey** it along and through the right-of-way, and **discharge** it to an adequate receiving body without causing adverse on- or off-site environmental impacts. In addition, major storm drainage systems provide a **flood water relief** function.

2.6.4.1 Stormwater Collection

Stormwater collection is a function of the minor storm drainage system which is accommodated through the use of roadside and median ditches, gutters, and drainage inlets.

**Roadside and Median Ditches** are used to intercept runoff and carry it to an adequate storm drain. These ditches should have adequate capacity for the design runoff and should be located and shaped in a manner that does not present a traffic hazard. If necessary, channel linings should be provided to control erosion in ditches. Where design velocities will permit, vegetative linings should be used.

**Gutters** are used to intercept pavement runoff and carry it along the roadway shoulder to an adequate storm drain inlet. Curbs are typically installed in combination with gutters where runoff from the pavement surface would erode fill slopes and/or where right-of-way requirements or topographic conditions will not permit the development of roadside ditches. Pavement sections are typically curbed in urban settings. Parabolic gutters without curbs are used in some areas.

**Drainage Inlets** are the receptors for surface water collected in ditches and gutters, and serve as the mechanism whereby surface water enters storm drains. When located along the shoulder of the roadway, storm drain inlets are sized and located to limit the spread of surface water onto travel lanes. The term "inlets", as used here, refers to all types of inlets such as grate inlets, curb inlets, slotted inlets, etc.

Drainage inlet locations are often established by the roadway geometries as well as by the intent to reduce the spread of water onto the roadway surface. Generally, inlets are placed at low points in the gutter grade, intersections, crosswalks, cross-slope reversals, and on side streets to prevent the water from flowing onto the main road. Additionally, inlets are placed upgrade of bridges to prevent drainage onto bridge decks and downgrade of bridges to prevent the flow of water from the bridge onto the roadway surface.



2.6.4.2 Stormwater Conveyance

Upon reaching the main storm drainage system, stormwater is conveyed along and through the right-of-way to its discharge point via storm drains connected by access holes or other access structures. In some situations, stormwater pump stations may also be required as a part of the conveyance system.

**Storm drains** are defined as that portion of the storm drainage system that receives runoff from inlets and conveys the runoff to some point where it is discharged into a channel, waterbody, or other piped system. Storm drains can be closed conduit or open channel; they consist of one or more pipes or conveyance channels connecting two or more inlets.

**Access holes, junction boxes, and inlets** serve as access structures and alignment control points in storm drainage systems. Critical design parameters related to these structures include access structure spacing and storm drain deflection. Spacing limits are often dictated by maintenance activities. In addition, these structures should be located at the intersections of two or more storm drains, when there is a change in the pipe size, and at changes in alignment (horizontal or vertical). These criteria are discussed in chapter 6.

**Stormwater pump stations** are required as a part of storm drainage systems in areas where gravity drainage is impossible or not economically justifiable. Stormwater pump stations are often required to drain depressed sections of roadways.

2.6.4.3 Stormwater Discharge Controls

Stormwater discharge controls are often required to off-set potential runoff quantity and/or quality impacts. Water quantity controls include detention/retention facilities. Water quality controls include extended detention facilities as well as other water quality management practices.

**Detention/retention** facilities are used to control the quantity of runoff discharged to receiving waters. A reduction in runoff quantity can be achieved by the storage of runoff in detention/retention basins, storm drainage pipes, swales and channels, or other storage facilities. Outlet controls on these facilities are used to reduce the rate of stormwater discharge. This concept should be considered for use in highway drainage design where existing downstream receiving channels are inadequate to handle peak flow rates from the highway project, where highway development would contribute to increased peak flow rates and aggravate downstream flooding problems, or as a technique to reduce the size and associated cost of outfalls from highway storm drainage facilities.

**Water quality controls** are used to control the quality of storm water discharges from highway storm drainage systems. Water quality controls include extended detention ponds, wet ponds, infiltration trenches, infiltration basins, porous pavements, sand filters, water quality inlets, vegetative practices, erosion control practices, and wetlands. Classes of pollutants typically associated with highway runoff include suspended solids, heavy metals, nutrients, and organics. Water quality controls should be considered for use as mitigation measures where predictions indicate that highway runoff may significantly impact the water quality of receiving waters.

2.6.4.4 Flood Water Relief

Flood water relief is a function provided by the major drainage system. This function is typically provided by streets, surface swales, ditches, streams, and/or other flow conduits which provide a relief mechanism and flow path for flood waters.

**2.6.5 Special Considerations**

As a part of the development of the conceptual storm drainage plan, several additional considerations should be made. First, deep cuts and utilities should be avoided whenever possible. Consideration should also be given to maintenance of traffic and construction related impacts. In some cases, temporary drainage must be provided for temporary bypasses and other traffic control related activities. Construction sequencing must also be considered as it relates to the constructability of laterals and storm mains. Some instances may dictate a trunk line on both sides of the roadway with very few laterals, while other instances may call for a single trunk line.

# 3. URBAN HYDROLOGIC PROCEDURES

This section provides an overview of hydrologic methods and procedures commonly used in urban highway drainage design. Much of the information contained in this section was condensed from Hydraulic Design Series 2, (HDS-2) *Hydrology*.[6] The presentation here is intended to provide the reader with an introduction to the methods and procedures, their data requirements, and their limitations. Most of these procedures can be applied using commonly available computer programs. Chapter 11 has information on such software. HDS-2 contains additional information and detail on the methods described.

## 3.1 RAINFALL (PRECIPITATION)

Rainfall, along with watershed characteristics, determines the flood flows upon which storm drainage design is based. The following sections describe three representations of rainfall which can be used to derive flood flows: constant rainfall intensity, dynamic rainfall, and synthetic rainfall events.



### 3.1.1 Constant Rainfall Intensity

Although rainfall intensity varies during precipitation events, many of the procedures used to derive peak flow are based on an assumed constant rainfall intensity. Intensity is defined as the rate of rainfall and is typically given in units of millimeters per hour (inches per hour).

Intensity-Duration-Frequency curves (IDF curves) have been developed for many jurisdictions throughout the United States through frequency analysis of rainfall events for thousands of rainfall gages. The IDF curve provides a summary of a site's rainfall characteristics by relating storm duration and exceedence probability (frequency) to rainfall intensity (assumed constant over the duration). Figure 3-1 illustrates an example IDF curve. To interpret an IDF curve, find the rainfall duration along the X-axis, go vertically up the graph until reaching the proper return period, then go horizontally to the left and read the intensity off of the Y-axis. For example, a 2-hr rainfall with a 10-yr return period would have an intensity of 38 mm/hr using figure 3-1. Regional IDF curves are available in most highway agency drainage manuals. If the IDF curves are not available, the designer needs to develop them on a project by project basis.

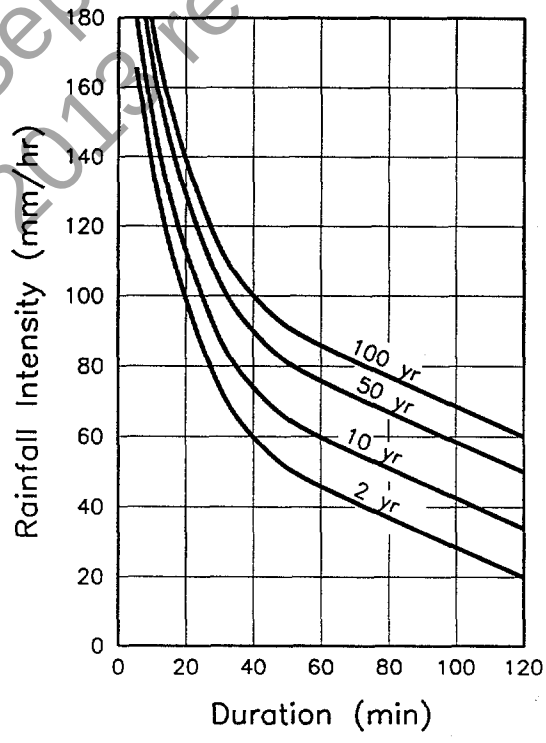


**Figure 3-1. Example IDF curve.**

### 3.1.2 Dynamic Rainfall (Hyetograph)

In any given storm, the instantaneous intensity is the slope of the mass rainfall curve at a

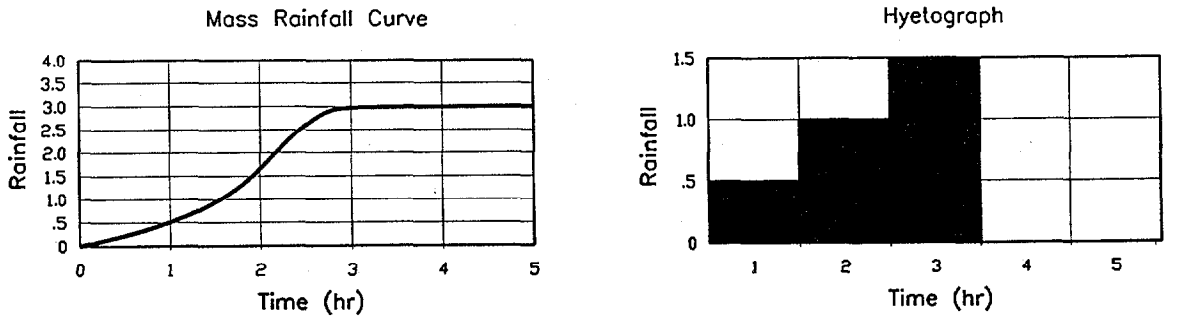


**Figure 3-2. Example mass rainfall curve and corresponding hyetography.**

particular time. The mass rainfall curve is simply the cumulative precipitation which has fallen up to a specific time. For hydrologic analysis, it is desirable to divide the storm into convenient time increments and to determine the average intensity over each of the selected periods. These results are then plotted as rainfall hyetographs, an example of which is presented in figure 3-2. Hyetographs provide greater precision than a constant rainfall intensity by specifying the precipitation variability over time, and are used in conjunction with hydrographic (rather than peak flow) methods. Hyetographs allow for simulation of actual rainfall events which can provide valuable information on the relative flood risks of different events and, perhaps, calibration of hydrographic models. Hyetographs of actual storms are often available from the National Climatic Data Center, which is part of the National Oceanic and Atmospheric Administration (NOAA).



### 3.1.3 Synthetic Rainfall Events

Drainage design is usually based on synthetic rather than actual rainfall events. The SCS 24-hr rainfall distributions are the most widely used synthetic hyetographs. These rainfall distributions were developed by the U.S. Department of Agriculture, Soil Conservation Service (SCS) [13] which is now known as the National Resources Conservation Service (NRCS). The SCS 24-hr distributions incorporate the intensity-duration relationship for the design return period. This approach is based on the assumption that the maximum rainfall for any duration within the 24-hr duration should have the same return period. For example, a 10-yr, 24-hr design storm would contain the 10-yr rainfall depths for all durations up to 24 hr as derived from IDF curves. SCS developed four synthetic 24-hr rainfall distributions as shown in figure 3-3; approximate geographic boundaries for each storm distribution are shown in figure 3-4.

HDS-2 provides a tabular listing of the SCS distributions, which are shown in figure 3-3. Although these distributions do not agree exactly with IDF curves for all locations in the region for which they are intended, the differences are within the accuracy limits of the rainfall depths read from the Weather Bureau's Rainfall Frequency Atlases. [6]

## 3.2 DETERMINATION OF PEAK FLOW RATES

Peak flows are generally adequate for design and analysis of conveyance systems such as storm drains or open channels. However, if the design or analysis must include flood routing (e.g., storage basins or

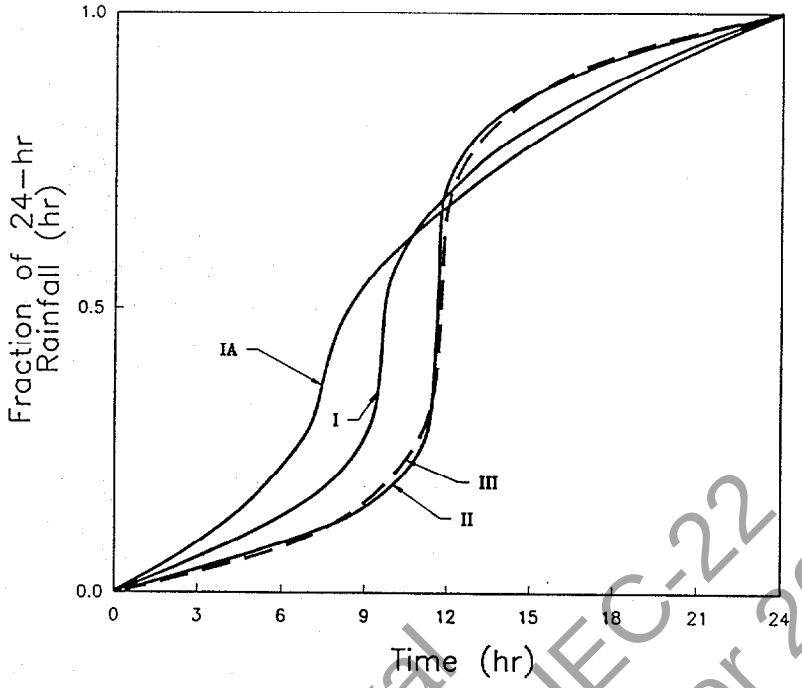


**Figure 3-3. SCS 24-hr rainfall distributions.**

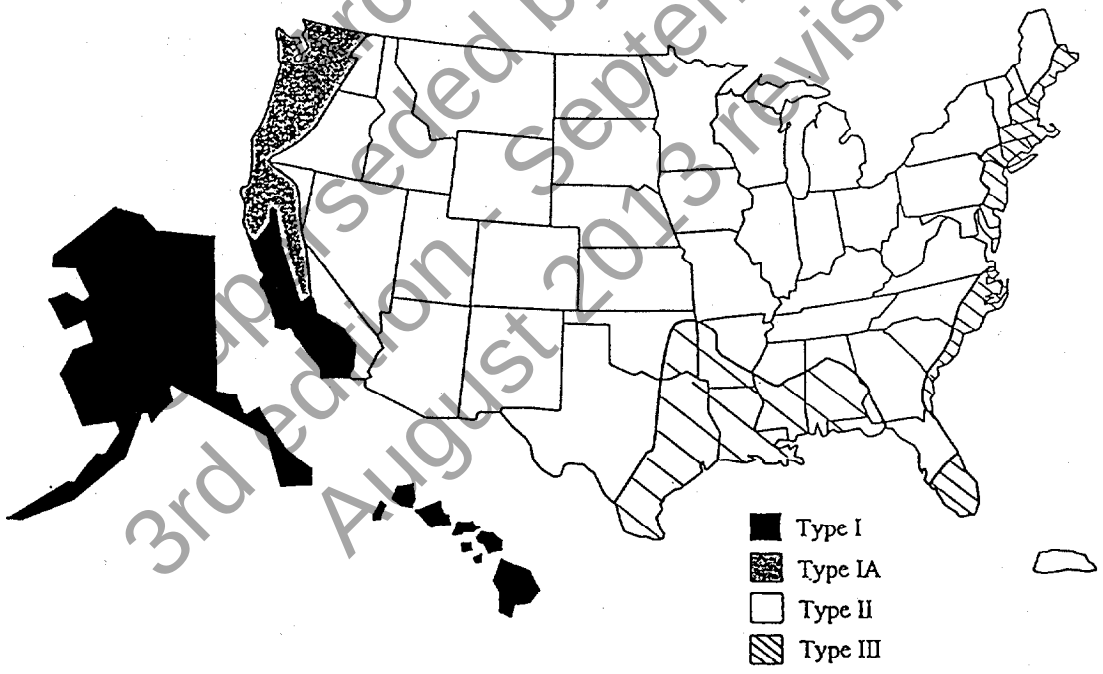


**Figure 3-4. Approximate geographic areas for SCS rainfall distributions.**

complex conveyance networks), a flood hydrograph is required. This section discusses methods used to derive peak flows for both gaged and ungaged sites.

### 3.2.1 Stochastic Methods

Stochastic methods, or frequency analysis, can be used to evaluate peak flows where adequate gaged streamflow data exist. Frequency distributions are used in the analysis of hydrologic data and include the normal distribution, the log-normal distribution, the Gumbel extreme value distribution, and the log-Pearson Type III distribution. The log-Pearson Type III distribution is a three-parameter gamma distribution with a logarithmic transform of the independent variable. It is widely used for flood analyses because the data quite frequently fit the assumed population. It is this flexibility that led the U.S. Water Resources Council to recommend its use as the standard distribution for flood frequency studies by all U.S. Government agencies. Figure 3-5 presents an example of a log-Pearson Type III distribution frequency curve. [6] Stochastic methods are not commonly used in urban drainage design due to the lack of adequate streamflow data. Consult HDS-2 [6] for additional information on stochastic methods.



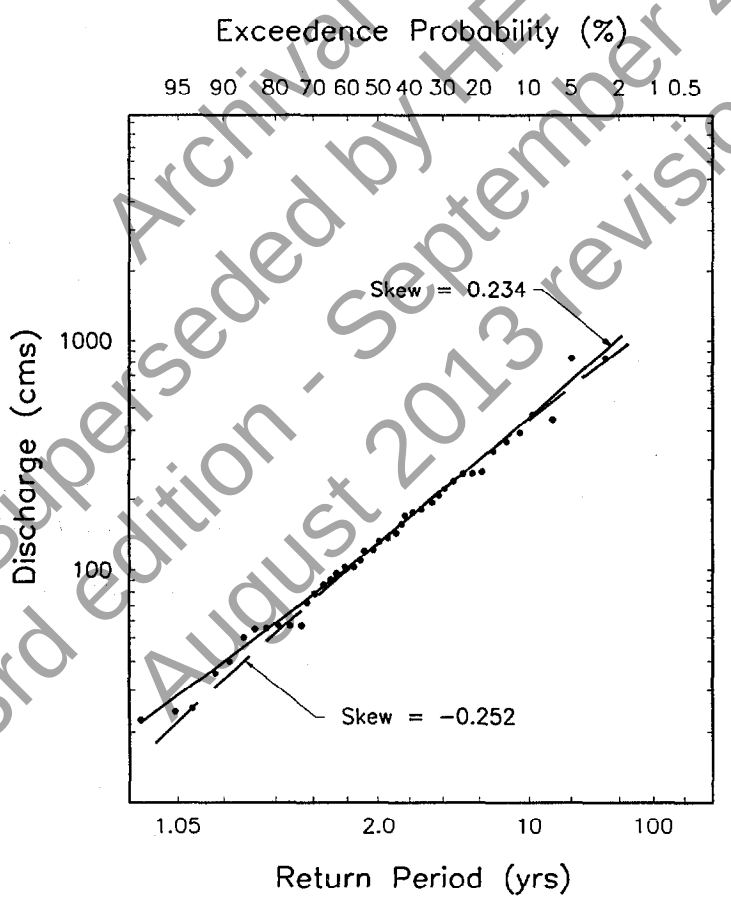


**Figure 3-5 Log Pearson Type III distribution analysis, Medina River, Texas**

### 3.2.2 Rational Method

One of the most commonly used equations for the calculation of peak flow from small areas is the Rational formula, given as:

$$Q = \frac{CIA}{K_c} \tag{3-1}$$

where:
- $Q$ = flow, $m^3/s$ ($ft^3/s$)
- $C$ = dimensionless runoff coefficient
- $I$ = rainfall intensity, mm/hr (in/hr)
- $A$ = drainage area, hectares, ha (acres)
- $K_c$ = units conversion factor equal to 360 (1.0 in English Units)

Assumptions inherent in the Rational formula are as follows: [6]

- The peak flow occurs when the entire watershed is contributing to the flow.
- The rainfall intensity is the same over the entire drainage area.
- The rainfall intensity is uniform over a time duration equal to the time of concentration, $t_c$. The time of concentration is the time required for water to travel from the hydraulically most remote point of the basin to the point of interest.
- The frequency of the computed peak flow is the same as that of the rainfall intensity, i.e., the 10-yr rainfall intensity is assumed to produce the 10-yr peak flow.
- The coefficient of runoff is the same for all storms of all recurrence probabilities.

Because of these inherent assumptions, the Rational formula should only be applied to drainage areas smaller than 80 ha (200 ac). [8]

#### 3.2.2.1 Runoff Coefficient

The runoff coefficient, C, in equation 3-1 is a function of the ground cover and a host of other hydrologic abstractions. It relates the estimated peak discharge to a theoretical maximum of 100 percent runoff. Typical values for C are given in table 3-1. If the basin contains varying amounts of different land cover or other abstractions, a composite coefficient can be calculated through areal weighing as follows: [6]

$$\text{Weighted } C = \frac{\sum (C_x A_x)}{A_{total}} \tag{3-2}$$

where: $x$ = subscript designating values for incremental areas with consistent land cover.

**Table 3-1. Runoff coefficients for Rational formula.** [14]

| Type of Drainage Area | Runoff Coefficient, C* |
|---|---|
| Business: | |
| Downtown areas | 0.70 - 0.95 |
| Neighborhood areas | 0.50 - 0.70 |
| Residential: | |
| Single-family areas | 0.30 - 0.50 |
| Multi-units, detached | 0.40 - 0.60 |
| Multi-units, attached | 0.60 - 0.75 |
| Suburban | 0.25 - 0.40 |
| Apartment dwelling areas | 0.50 - 0.70 |
| Industrial: | |
| Light areas | 0.50 - 0.80 |
| Heavy areas | 0.60 - 0.90 |
| Parks, cemeteries | 0.10 - 0.25 |
| Playgrounds | 0.20 - 0.40 |
| Railroad yard areas | 0.20 - 0.40 |
| Unimproved areas | 0.10 - 0.30 |
| Lawns: | |
| Sandy soil, flat, 2% | 0.05 - 0.10 |
| Sandy soil, average, 2 - 7% | 0.10 - 0.15 |
| Sandy soil, steep, 7% | 0.15 - 0.20 |
| Heavy soil, flat, 2% | 0.13 - 0.17 |
| Heavy soil, average 2 - 7% | 0.18 - 0.22 |
| Heavy soil, steep, 7% | 0.25 - 0.35 |
| Streets: | |
| Asphaltic | 0.70 - 0.95 |
| Concrete | 0.80 - 0.95 |
| Brick | 0.70 - 0.85 |
| Drives and walks | 0.75 - 0.85 |
| Roofs | 0.75 - 0.95 |

* Higher values are usually appropriate for steeply sloped areas and longer return periods because infiltration and other losses have a proportionally smaller effect on runoff in these cases.

The following example illustrates the calculation of the runoff coefficient, C, using area weighing.

*Example 3-1*

***Given :*** *The following existing and proposed land uses:*

*Existing conditions (unimproved):*

| *Land Use* | *Area, ha (ac)* | *Runoff Coefficient, C* |
|---|---|---|
| *Unimproved Grass* | 8.95 (22.1) | 0.25 |
| *Grass* | 8.60 (21.2) | 0.22 |
| Total = | 17.55 (43.3) | |

*Proposed conditions (improved):*

| *Land Use* | *Area, ha (ac)* | *Runoff Coefficient, C* |
|---|---|---|
| *Paved* | *2.20 (5.4)* | *0.90* |
| *Lawn* | *0.66 (1.6)* | *0.15* |
| *Unimproved Grass* | *7.52 (18.6)* | *0.25* |
| *Grass* | *7.17 (17.7)* | *0.22* |
| *Total =* | *17.55 (43.3)* | |

***Find:*** *Weighted runoff coefficient, C, for existing and proposed conditions.*

***Solution:***

*Step 1: Determine Weighted C for existing (unimproved) conditions using equation 3-2.*

$$\text{Weighted } C = \sum (C_x A_x)/A = [(8.95)(0.25) + (8.60)(0.22)] / (17.55)$$
$$\text{Weighted } C = 0.235$$

*Step 2: Determine Weighted C for proposed (improved) conditions using equation 3-2.*

$$\text{Weighted } C = [(2.2)(0.90) + (0.66)(0.15) + (7.52)(0.25) + (7.17)(0.22)] / (17.55)$$
$$\text{Weighted } C = 0.315$$

*A computer solution to this example is presented in Appendix B in the solution for example 3-3.*



3.2.2.2 Rainfall Intensity

Rainfall intensity, duration, and frequency curves are necessary to use the Rational method. Regional IDF curves are available in most state highway agency manuals and are also available from the National Oceanic and Atmospheric Administration (NOAA). Again, if the IDF curves are not available, they need to be developed.

### 3.2.2.3 Time of Concentration

There are a number of methods that can be used to estimate time of concentration ($t_c$), some of which are intended to calculate the flow velocity within individual segments of the flow path (e.g., shallow concentrated flow, open channel flow, etc.). The time of concentration can be calculated as the sum of the travel times within the various consecutive flow segments.

*Sheet Flow Travel Time.* Sheet flow is the shallow mass of runoff on a planar surface with a uniform depth across the sloping surface. This usually occurs at the headwater of streams over relatively short distances, rarely more than about 90 m (300 ft), and possibly less than 25 m (80 ft). Sheet flow is commonly estimated with a version of the kinematic wave equation, a derivative of Manning's equation, as follows : [6]

$$T_{ti} = \frac{K_c}{I^{0.4}} \left( \frac{n\ L}{\sqrt{S}} \right)^{0.6} \tag{3-3}$$

where:
- $T_{ti}$ = sheet flow travel time, min
- $n$ = roughness coefficient. (see table 3-2)
- $L$ = flow length, m (ft)
- $I$ = rainfall intensity, mm/hr (in/hr)
- $S$ = surface slope, m/m (ft/ft)
- $K_c$ = empirical coefficient equal to 6.943 (0.933 in English units)

Since I depends on $t_c$ and $t_c$ is not initially known, the computation of $t_c$ is an iterative process. An initial estimate of $t_c$ is assumed and used to obtain I from the IDF curve for the locality. The $t_c$ is then computed from equation 3-3 and used to check the initial value of I. If they are not the same, the process is repeated until two successive $t_c$ estimates are the same. [6]

*Shallow Concentrated Flow Velocity.* After short distances of at most 90 m (300 ft), sheet flow tends to concentrate in rills and then gullies of increasing proportions. Such flow is usually referred to as shallow concentrated flow. The velocity of such flow can be estimated using a relationship between velocity and slope as follows: [6]

$$V = k\ S_p^{0.5} \tag{3-4}$$

where:
- $V$ = velocity, m/s (ft/s)
- $k$ = intercept coefficient (see table 3-3)
- $S_p$ = slope, percent

*Open Channel and Pipe Flow Velocity.* Flow in gullies empties into channels or pipes. Open channels are assumed to begin where either the blue stream line shows on USGS quadrangle sheets or the channel is visible on aerial photographs. Cross-section geometry and roughness should be obtained for all channel reaches in the watershed. Manning's equation can be used to estimate average flow velocities in pipes and open channels as follows:

$$V = \frac{K_c}{n} R^{2/3}\ S^{1/2} \tag{3-5}$$

**Table 3-2. Manning's roughness coefficient (n) for overland sheet flow.** [6]

| Surface Description | n |
|---|---|
| Smooth asphalt | 0.011 |
| Smooth concrete | 0.012 |
| Ordinary concrete lining | 0.013 |
| Good wood | 0.014 |
| Brick with cement mortar | 0.014 |
| Vitrified clay | 0.015 |
| Cast iron | 0.015 |
| Corrugated metal pipe | 0.024 |
| Cement rubble surface | 0.024 |
| Fallow (no residue) | 0.05 |
| Cultivated soils | |
| Residue cover ≤ 20% | 0.06 |
| Residue cover > 20% | 0.17 |
| Range (natural) | 0.13 |
| Grass | |
| Short grass prairie | 0.15 |
| Dense grasses | 0.24 |
| Bermuda grass | 0.41 |
| Woods* | |
| Light underbrush | 0.40 |
| Dense underbrush | 0.80 |

* When selecting n, consider cover to a height of about 30 mm. This is the only part of the plant cover that will obstruct sheet flow



where: $n$ = roughness coefficient (see table 3-4)
$V$ = velocity, m/s (ft/s)
$R$ = hydraulic radius (defined as the flow area divided by the wetted perimeter), m (ft)
$S$ = slope, m/m (ft/ft)
$K_c$ = units conversion factor equal to 1 (1.49 in English units)

For a circular pipe flowing full, the hydraulic radius is one-fourth of the diameter. For a wide rectangular channel (w > 10 d), the hydraulic radius is approximately equal to the depth. The travel time is then calculated as follows:

$$T_{ti} = \frac{L}{60V} \tag{3-6}$$

where: $T_{ti}$ = travel time for segment i, min
$L$ = flow length for segment i, m (ft)
$V$ = velocity for segment i, m/s (ft/s)

**Table 3-3. Intercept coefficients for velocity vs. slope relationship of equation 3-4.** [6]

| Land cover/flow regime | k |
|---|---|
| Forest with heavy ground litter; hay meadow (overland flow). | 0.076 |
| Trash fallow or minimum tillage cultivation; contour or strip cropped; woodland (overland flow). | 0.152 |
| Short grass pasture (overland flow). | 0.213 |
| Cultivated straight row (overland flow). | 0.274 |
| Nearly bare and untilled (overland flow); alluvial fans in western mountain regions. | 0.305 |
| Grassed waterway (shallow concentrated flow). | 0.457 |
| Unpaved (shallow concentrated flow). | 0.491 |
| Paved area (shallow concentrated flow); small upland gullies. | 0.619 |



***Example 3-2***

*Given: The following flow path characteristics:*

| *Flow Segment* | *Length (m)* | *Slope (m/m)* | *Segment Description* |
|---|---|---|---|
| *1* | *25* | *0.005* | *Short grass pasture* |
| *2* | *43* | *0.005* | *Short grass pasture* |
| *3* | *79* | *0.006* | *Grassed waterway* |
| *4* | *146* | *0.008* | *380 mm concrete pipe* |

***Find:*** *Railfall intensity, I, = 60 mm/hr. The time of concentration, $t_c$, for the area.*

***Solution:***

*Step 1. Calculate time of concentration for each segment.*

*Segment 1*

*Obtain Manning's n roughness coefficient from Table 3-2:*

$n = 0.15$

*Determine the sheet flow travel time using equation 3-3:*

$T_{tt} = (6.943/I^{0.4})\ (nL/S^{0.5})^{0.6} = [6.943/(60)^{0.4}]\ [(0.15)(25)/(0.005)^{0.5}]^{0.6} = 14.6$ *min.*

**Table 3-4. Values of Manning coefficient (n) for channels and pipes.** [15]

| Conduit Material | Manning n* |
|---|---|
| Closed conduits | |
| Asbestos-cement pipe | 0.011 - 0.015 |
| Brick | 0.013 - 0.017 |
| Cast iron pipe | |
| Cement-lined & seal coated | 0.011 - 0.015 |
| Concrete (monolithic) | 0.012 - 0.014 |
| Concrete pipe | 0.011 - 0.015 |
| Corrugated-metal pipe (1/2-in x 2 1/2-in corrugations) | |
| Plain | 0.022 - 0.026 |
| Paved invert | 0.018 - 0.022 |
| Spun asphalt lined | 0.011 - 0.015 |
| Plastic pipe (smooth) | 0.011 - 0.015 |
| Vitrified clay | |
| Pipes | 0.011 - 0.015 |
| Liner plates | 0.013 - 0.017 |
| Open channels | |
| Lined channels | |
| a. Asphalt | 0.013 - 0.017 |
| b. Brick | 0.012 - 0.018 |
| c. Concrete | 0.011 - 0.020 |
| d. Rubble or riprap | 0.020 - 0.035 |
| e. Vegetal | 0.030 - 0.40 |
| Excavated or dredged | |
| Earth, straight and uniform | 0.020 - 0.030 |
| Earth, winding, fairly uniform | 0.025 - 0.040 |
| Rock | 0.030 - 0.045 |
| Unmaintained | 0.050 - 0.14 |
| Natural channels (minor streams, top width at flood stage < 100 ft) | |
| Fairly regular section | 0.03 - 0.07 |
| Irregular section with pools | 0.04 - 0.10 |

* Lower values are usually for well-constructed and maintained (smoother) pipes and channels.

*Segment 2*

*Obtain intercept coefficient, k, from table 3-3:*

$k = 0.213$

*Determine the concentrated flow velocity from equation 3-4:*

$V = k\,S_p^{0.5} = (0.213)(0.5)^{0.5} = 0.15$ m/s

*Determine the travel time from equation 3-6:*

$T_{t2} = L/(60\,V) = 43/[(60)(0.15)] = 4.8$ min

*Segment 3*

*Obtain intercept coefficient, k, from table 3-3:*

$k = 0.457$

*Determine the concentrated flow velocity from equation 3-4:*

$V = k\,S_p^{0.5} = (0.457)(0.6)^{0.5} = 0.35$ m/s

*Determine the travel time from equation 3-6:*

$T_{t3} = L/(60\,V) = 79/[(60)(0.35)] = 3.7$ min

*Segment 4*

*Obtain Manning's n roughness coefficient from table 3-4:*

$n = 0.011$

*Determine the pipe flow velocity from equation 3-5:*

$V = (1.0/0.011)(0.38/4)^{0.67}\,(0.008)^{0.5} = 1.7$ m/s

*Determine the travel time from equation 3-6:*

$T_{t4} = L/(60\,V) = 146/[(60)(1.7)] = 1.4$ min

*Step 2.*

*Determine the total travel time by summing the individual travel times:*

$t_c = T_{t1} + T_{t2} + T_{t3} + T_{t4} = 14.6 + 4.8 + 3.7 + 1.4 = 24.5$ min; use 25 minutes

***Example 3-3***

**Given:** *Land use conditions from example 3-1 and the following times of concentration:*

| | *Time of concentration, $t_c$ (min)* | *Weighted C (from example 3-1)* |
|---|---|---|
| *Existing condition (unimproved)* | *88* | *0.235* |
| *Proposed condition (improved)* | *66* | *0.315* |

**Find:** *The 10 - year peak flow using the Rational Formula and the IDF Curve shown in figure 3-1.*

**Solution:**

*Step 1. Determine rainfall intensity, I, from the 10-year IDF curve for each time of concentration.*

| | *Rainfall intensity, I* |
|---|---|
| *Existing condition (unimproved)* | *48 mm/hr (1.9 in/hr)* |
| *Proposed condition (improved)* | *58 mm/hr (2.3 in/hr)* |

*Step 2. Determine peak flow rate, Q.*

*Existing condition (unimproved):* $Q = CIA / K_c$
$= (0.235)(48)(17.55)/360 = 0.55\ m^3/s\ (19.4\ ft^3/s)$

*Proposed condition (improved):* $Q = CIA / K_c$
$= (0.315)(58)(17.55)/360 = 0.88\ m^3/s\ (31.2\ ft^3/s)$

*A computer solution for this example for both the existing and improved conditions is presented in Appendix B.*

Reference 6 contains additional information on the Rational method.

### 3.2.3 USGS Regression Equations

Regression equations are commonly used for estimating peak flows at ungaged sites or sites with limited data. The United States Geological Survey (USGS) has developed and compiled regional regression equations which are included in a computer program called the National Flood Frequency program (NFF). NFF allows quick and easy estimation of peak flows throughout the United States. [15] All the USGS regression equations were developed using dependent variables in English units. Local equations may be available which provide better correspondence to local hydrology than the regional equations found in NFF.

#### 3.2.3.1 Rural Equations

The rural equations are based on watershed and climatic characteristics within specific regions of each state that can be obtained from topographic maps, rainfall reports, and atlases. These regression equations are generally of the following form:

$$RQ_T = a\ A^b\ B^c\ C^d \tag{3-7}$$

where:
- $RQ_T$ = T-yr rural peak flow
- a = regression constant
- b,c,d = regression coefficients
- A,B,C = basin characteristics

Through a series of studies conducted by the USGS, State Highway, and other agencies, rural equations have been developed for all states. These equations are presented in reference 15, which has a companion software package to implement these equations. These equations should not be used where dams and other hydrologic modifications have a significant effect on peak flows. Many other limitations are presented in reference 15.

#### 3.2.3.2 Urban Equations

Rural peak flow can be converted to urban peak flows with the seven-parameter Nationwide Urban regression equations developed by USGS. These equations are shown in table 3-5. [16] A three-parameter equation has also been developed, but the seven-parameter equation is implemented in NFF. The urban equations are based on urban runoff data from 269 basins in 56 cities and 31 states. These equations have been thoroughly tested and proven to give reasonable estimates of peak flows having recurrence

**Table 3-5. Nationwide urban equations developed by USGS.** [17]

| | |
|---|---|
| $UQ2 = 2.35A_s^{.41}SL^{.17}(RI2 + 3)^{2.04}(ST + 8)^{-.65}(13 - BDF)^{-.32}IA_s^{.15}RQ2^{.47}$ | (3-8) |
| $UQ5 = 2.70A_s^{.35}SL^{.16}(RI2 + 3)^{1.86}(ST + 8)^{-.59}(13 - BDF)^{-.31}IA_s^{.11}RQ5^{.54}$ | (3-9) |
| $UQ10 = 2.99A_s^{.32}SL^{.15}(RI2 + 3)^{1.75}(ST + 8)^{-.57}(13 - BDF)^{-.30}IA_s^{.09}RQ10^{.58}$ | (3-10) |
| $UQ25 = 2.78A_s^{.31}SL^{.15}(RI2 + 3)^{1.76}(ST + 8)^{-.55}(13 - BDF)^{-.29}IA_s^{.07}RQ25^{.60}$ | (3-11) |
| $UQ50 = 2.67A_s^{.29}SL^{.15}(RI2 + 3)^{1.74}(ST + 8)^{-.53}(13 - BDF)^{-.28}IA_s^{.06}RQ50^{.62}$ | (3-12) |
| $UQ100 = 2.50A_s^{.29}SL^{.15}(RI2 + 3)^{1.76}(ST + 8)^{-.52}(13 - BDF)^{-.28}IA_s^{.06}RQ100^{.63}$ | (3-13) |
| $UQ500 = 2.27A_s^{.29}SL^{.16}(RI2 + 3)^{1.86}(ST + 8)^{-.54}(13 - BDF)^{-.27}IA_s^{.05}RQ500^{.63}$ | (3-14) |

where:

$UQ_T$ = Urban peak discharge for T-yr recurrence interval, $ft^3/s$
$A_s$ = Contributing drainage area, sq mi
SL = Main channel slope (measured between points which are 10 percent and 85 percent of main channel length upstream of site), ft/mi
RI2 = Rainfall intensity for 2-h, 2-yr recurrence, in/hr
ST = Basin Storage (percentage of basin occupied by lakes, reservoirs, swamps, and wetlands), percent
BDF = Basin development factor (provides a measure of the hydraulic efficiency of the basin–see description below
IA = Percentage of basin occupied by impervious surfaces
$RQ_T$ = T-yr rural peak flow



intervals between 2 and 500 yrs. Subsequent testing at 78 additional sites in the southeastern United States verified the adequacy of the equations. [16] While these regression equations have been verified, errors may still be on the order of 35 to 50 percent when compared to field measurements.

The basin development factor (BDF) is a highly significant parameter in the urban equations and provides a measure of the efficiency of the drainage basin and the extent of urbanization. It can be determined from drainage maps and field inspection of the basin. The basin is first divided into upper, middle, and lower thirds. Within each third of the basin, four characteristics must be evaluated and assigned a code of 0 or 1. The four characteristics are: channel improvements; channel lining (prevalence of impervious surface lining); storm drains or storm sewers; and curb and gutter streets. With the curb and gutter characteristic, at least 50 percent of the partial basin must be urbanized or improved with respect to an individual characteristic to be assigned a code of 1. With four characteristics being evaluated for each third of the basin, complete development would yield a BDF of 12. References 6 and 16 contain detail on calculating the BDF.

***Example 3-4***

***Given:*** *The following site characteristics:*

- *Site is located in Tulsa, Oklahoma.*
- *Drainage area is 3 sq mi.*
- *Mean annual precipitation is 38 in.*

- *Urban parameters as follows (see table 3-5 for parameter definition):*
  *SL = 53 ft/mi*

*RI2* = *2.2 in/hr (see U.S. Weather Technical Paper 40 [1961])*
*ST* = *5*
*BDF* = *7*
*IA* = *35*

***Find:*** *The 2-yr urban peak flow.*

***Solution:***

*Step 1: Calculate the rural peak flow from appropriate regional equation.* [6]

*From reference 15, the rural regression equation for Tulsa, Oklahoma is*

$$RQ2 = 0.368A^{.59}P^{1.84} = 0.368(3)^{.59}(38)^{1.84} = 568\ ft^3/s$$

*Step 2: Calculate the urban peak flow using equation 3-8.*

$$UQ2 = 2.35A_s^{.41}SL^{.17}(RI2 + 3)^{2.04}(ST + 8)^{-.65}(13 - BDF)^{-.32}IA_s^{.15}RQ2^{.47}$$

$$UQ2 = 2.35(3)^{.41}(53)^{.17}(2.2+3)^{2.04}(5+8)^{-.65}(13-7)^{-.32}(35)^{.15}(568)^{.47} = 747\ ft^3/s$$

### 3.2.4 SCS (NRCS) Peak Flow Method

The SCS (now known as NRCS) peak flow method calculates peak flow as a function of drainage basin area, potential watershed storage, and the time of concentration. The graphical approach to this method can be found in TR-55. This rainfall-runoff relationship separates total rainfall into direct runoff, retention, and initial abstraction to yield the following equation for rainfall runoff:

$$Q_D = \frac{(P - 0.2S_R)^2}{P + 0.8S_R} \tag{3-15}$$

where: $Q_D$ = depth of direct runoff, mm (in)
$P$ = depth of 24 hour precipitation, mm (in). This information is available in most highway agency drainage manuals by multiplying the 24 hour rainfall intensity by 24 hours.
$S_R$ = retention, mm (in)

Empirical studies found that $S_R$ is related to soil type, land cover, and the antecedent moisture condition of the basin. These are represented by the runoff curve number, CN, which is used to estimate $S_R$ with the following equation:

$$S_R = 25.4\left[\frac{1000}{CN} - 10\right] \tag{3-16}$$

where: CN = curve number, listed in table 3-6 for different land uses and hydrologic soil types. This table assumes average antecedent moisture conditions. For multiple land use/soil type combinations within a basin, use areal weighing (see example 3-1). Soil maps are generally available through the local jurisdiction or the NRCS.

**Table 3-6. Runoff curve numbers for urban areas (average watershed condition, $I_a = 0.2\ S_R$).**[6]

| Land Use Description | | Curve Numbers for Hydrologic Soil Group A | B | C | D |
|---|---|---|---|---|---|
| Fully developed urban areas (vegetation established) | | | | | |
| Lawns, open spaces, parks, golf courses, cemeteries, etc. | | | | | |
| Good condition; grass cover on 75% or more of the area | | 39 | 61 | 74 | 80 |
| Fair condition; grass cover on 50 to 75% of the area | | 49 | 69 | 79 | 84 |
| Poor condition; grass cover on 50% or less of the area | | 68 | 79 | 86 | 89 |
| Paved parking lots, roofs, driveways, etc. (excl. right-of-way) | | 98 | 98 | 98 | 98 |
| Streets and roads | | | | | |
| Paved with curbs and storm sewers (excl. right-of-way) | | 98 | 98 | 98 | 98 |
| Gravel (incl. right-of-way) | | 76 | 85 | 89 | 91 |
| Dirt (incl. right-of-way) | | 72 | 82 | 87 | 89 |
| Paved with open ditches (incl. right-of-way) | | 83 | 89 | 92 | 93 |
| | Average % impervious | | | | |
| Commercial and business areas | 85 | 89 | 92 | 94 | 95 |
| Industrial districts | 72 | 81 | 88 | 91 | 93 |
| Row houses, town houses, and residential with lots sizes 1/8 acre or less | 65 | 77 | 85 | 90 | 92 |
| Residential: average lot size | | | | | |
| 1/4 acre | 38 | 61 | 75 | 83 | 87 |
| 1/3 acre | 30 | 57 | 72 | 81 | 86 |
| 1/2 acre | 25 | 54 | 70 | 80 | 85 |
| 1 acre | 20 | 51 | 68 | 79 | 84 |
| 2 acre | 12 | 46 | 65 | 77 | 82 |
| Developing urban areas (no vegetation established) | | | | | |
| Newly graded area | | 77 | 86 | 91 | 94 |
| Western desert urban areas: | | | | | |
| Natural desert landscaping (pervious areas only) | | 63 | 77 | 85 | 88 |
| Artificial desert landscaping (impervious weed barrier, desert shrub with 1- to 2-in sand or gravel mulch and basin borders). | | 96 | 96 | 96 | 96 |
| Cultivated agricultural land | | | | | |
| Fallow | | | | | |
| Straight row or bare soil | | 77 | 86 | 91 | 94 |
| Conservation tillage Poor | | 76 | 85 | 90 | 93 |
| Conservation tillage Good | | 74 | 83 | 88 | 90 |

Peak flow is then estimated with the following equation:

$$q_p = q_u A_k Q_D \tag{3-17}$$

where: $q_p$ = peak flow, $m^3/s$ ($ft^3/s$)
$q_u$ = unit peak flow, $m^3/s/km^2/mm$ ($ft^3/s/mi^2/in$)
$A_k$ = basin area, $km^2$ ($mi^2$)
$Q_D$ = runoff depth, mm (in)

The unit peak flow is calculated with the following equation (graphical depictions are presented in TR-55):

$$q_u = 0.000431 \times 10^{C_0 + C_1 \log t_c + C_2 [\log(t_c)]^2} \tag{3-18}$$

where: $C_0$, $C_1$, $C_2$ = coefficients, listed in table 3-7. These are a function of the 24 hour rainfall distribution type and $I_a/P$. $I_a/P$ ratios are listed in table 3-8.
$t_c$ = time of concentration, hr
$I_a$ = initial abstraction, mm (in)

When ponding or swampy areas occur in a basin, considerable runoff may be retained in temporary storage. The peak flow should be reduced to reflect the storage with the following equation:

$$q_a = q_p F_p \tag{3-19}$$

where: $q_a$ = adjusted peak flow, $m^3/s$ ($ft^3/s$)
$F_p$ = adjustment factor, listed in table 3-9

This method has a number of limitations which can have an impact on the accuracy of estimated peak flows:

- Basin should have fairly homogeneous CN values.
- CN should be 40 or greater.
- $t_c$ should be between 0.1 and 10 hr.
- $I_a/P$ should be between 0.1 and 0.5.
- Basin should have one main channel or branches with nearly equal times of concentration.
- Neither channel nor reservoir routing can be incorporated.
- $F_p$ factor is applied only for ponds and swamps that are not in the $t_c$ flow path.



***Example 3-5***

***Given:*** *The following physical and hydrologic conditions.*

- *3.3 sq km of fair condition open space and 2.8 sq km of large lot residential.*
- *Negligible pond and swamp land.*
- *Hydrologic soil type C.*
- *Average antecedent moisture conditions.*
- *Time of concentration is 0.8 hr.*
- *24-hr, type II rainfall distribution, 10-yr rainfall of 150 mm.*

**Table 3-7. Coefficients for SCS Peak Discharge Method (equation 3-18).** [6]

| Rainfall type | $I_a/P$ | $C_0$ | $C_1$ | $C_2$ |
|---|---|---|---|---|
| I | 0.10 | 2.30550 | -0.51429 | -0.11750 |
| | 0.20 | 2.23537 | -0.50387 | -0.08929 |
| | 0.25 | 2.18219 | -0.48488 | -0.06589 |
| | 0.30 | 2.10624 | -0.45695 | -0.02835 |
| | 0.35 | 2.00303 | -0.40769 | -0.01983 |
| | 0.40 | 1.87733 | -0.32274 | 0.05754 |
| | 0.45 | 1.76312 | -0.15644 | 0.00453 |
| | 0.50 | 1.67889 | -0.06930 | 0.0 |
| IA | 0.10 | 2.03250 | -0.31583 | -0.13748 |
| | 0.20 | 1.91978 | -0.28215 | -0.07020 |
| | 0.25 | 1.83842 | -0.25543 | -0.02597 |
| | 0.30 | 1.72657 | -0.19826 | 0.02633 |
| | 0.50 | 1.63417 | -0.09100 | 0.0 |
| II | 0.10 | 2.55323 | -0.61512 | -0.16403 |
| | 0.30 | 2.46532 | -0.62257 | -0.11657 |
| | 0.35 | 2.41896 | -0.61594 | -0.08820 |
| | 0.40 | 2.36409 | -0.59857 | -0.05621 |
| | 0.45 | 2.29238 | -0.57005 | -0.02281 |
| | 0.50 | 2.20282 | -0.51599 | -0.01259 |
| III | 0.10 | 2.47317 | -0.51848 | -0.17083 |
| | 0.30 | 2.39628 | -0.51202 | -0.13245 |
| | 0.35 | 2.35477 | -0.49735 | -0.11985 |
| | 0.40 | 2.30726 | -0.46541 | -0.11094 |
| | 0.45 | 2.24876 | -0.41314 | -0.11508 |
| | 0.50 | 2.17772 | -0.36803 | -0.09525 |



***Find:*** *The 10-yr peak flow using the SCS peak flow method.*

***Solution:***

*Step 1: Calculate the composite curve number using table 3-6 and equation 3-2.*

$$CN = \Sigma (CN_x A_x)/A = [3.3(79) + 2.8(77)]/(3.3 + 2.8) = 78$$

*Step 2: Calculate the retention, $S_R$, using equation 3-16.*

$$S_R = 25.4(1000/CN - 10) = 25.4 [(1000/78) - 10] = 72 \text{ mm}$$

*Step 3: Calculate the depth of direct runoff using equation 3-15.*

$$Q_D = (P-0.2S_R)^2 / (P+0.8S_R) = [150 - 0.2(72)]^2/[[150 + 0.8(72)] = 89 \text{ mm}$$

**Table 3-8. $I_a/P$ for selected rainfall depths and curve numbers.** [6]

| Rainfall | Runoff Curve Number (CN) | | | | | | | | | | | |
|---|---|---|---|---|---|---|---|---|---|---|---|---|
| (mm) | 40 | 45 | 50 | 55 | 60 | 65 | 70 | 75 | 80 | 85 | 90 | 95 |
| 10 | * | * | * | * | * | * | * | * | * | * | * | 0.27 |
| 20 | * | * | * | * | * | * | * | * | * | 0.45 | 0.28 | 0.13 |
| 30 | * | * | * | * | * | * | * | * | 0.42 | 0.30 | 0.19 | + |
| 40 | * | * | * | * | * | * | * | 0.42 | 0.32 | 0.22 | 0.14 | + |
| 50 | * | * | * | * | * | * | 0.44 | 0.34 | 0.25 | 0.18 | 0.11 | + |
| 60 | * | * | * | * | * | 0.46 | 0.36 | 0.28 | 0.21 | 0.15 | + | + |
| 70 | * | * | * | * | 0.48 | 0.39 | 0.31 | 0.24 | 0.18 | 0.13 | + | + |
| 80 | * | * | * | * | 0.42 | 0.34 | 0.27 | 0.21 | 0.16 | 0.11 | + | + |
| 90 | * | * | * | 0.46 | 0.38 | 0.30 | 0.24 | 0.19 | 0.14 | 0.10 | + | + |
| 100 | * | * | * | 0.42 | 0.34 | 0.27 | 0.22 | 0.17 | 0.13 | + | + | + |
| 110 | * | * | 0.46 | 0.38 | 0.31 | 0.25 | 0.20 | 0.15 | 0.12 | + | + | + |
| 120 | * | * | 0.42 | 0.35 | 0.28 | 0.23 | 0.18 | 0.14 | 0.11 | + | + | + |
| 130 | * | 0.48 | 0.39 | 0.32 | 0.26 | 0.21 | 0.17 | 0.13 | 0.10 | + | + | + |
| 140 | * | 0.44 | 0.36 | 0.30 | 0.24 | 0.20 | 0.16 | 0.12 | + | + | + | + |
| 150 | * | 0.41 | 0.34 | 0.28 | 0.23 | 0.18 | 0.15 | 0.11 | + | + | + | + |
| 160 | 0.48 | 0.39 | 0.32 | 0.26 | 0.21 | 0.17 | 0.14 | 0.11 | + | + | + | + |
| 170 | 0.45 | 0.37 | 0.30 | 0.24 | 0.20 | 0.16 | 0.13 | 0.10 | + | + | + | + |
| 180 | 0.42 | 0.34 | 0.28 | 0.23 | 0.19 | 0.15 | 0.12 | + | + | + | + | + |
| 190 | 0.40 | 0.33 | 0.27 | 0.22 | 0.18 | 0.14 | 0.11 | + | + | + | + | + |
| 200 | 0.38 | 0.31 | 0.25 | 0.21 | 0.17 | 0.14 | 0.11 | + | + | + | + | + |
| 210 | 0.36 | 0.30 | 0.24 | 0.20 | 0.16 | 0.13 | 0.10 | + | + | + | + | + |
| 220 | 0.35 | 0.28 | 0.23 | 0.19 | 0.15 | 0.12 | 0.10 | + | + | + | + | + |
| 230 | 0.33 | 0.27 | 0.22 | 0.18 | 0.15 | 0.12 | + | + | + | + | + | + |
| 240 | 0.32 | 0.26 | 0.21 | 0.17 | 0.14 | 0.11 | + | + | + | + | + | + |
| 250 | 0.30 | 0.25 | 0.20 | 0.17 | 0.14 | 0.11 | + | + | + | + | + | + |
| 260 | 0.29 | 0.24 | 0.20 | 0.16 | 0.13 | 0.11 | + | + | + | + | + | + |
| 270 | 0.28 | 0.23 | 0.19 | 0.15 | 0.13 | 0.10 | + | + | + | + | + | + |
| 280 | 0.27 | 0.22 | 0.18 | 0.15 | 0.12 | 0.10 | + | + | + | + | + | + |
| 290 | 0.26 | 0.21 | 0.18 | 0.14 | 0.12 | + | + | + | + | + | + | + |
| 300 | 0.25 | 0.21 | 0.17 | 0.14 | 0.11 | + | + | + | + | + | + | + |
| 310 | 0.25 | 0.20 | 0.16 | 0.13 | 0.11 | + | + | + | + | + | + | + |
| 320 | 0.24 | 0.19 | 0.16 | 0.13 | 0.11 | + | + | + | + | + | + | + |
| 330 | 0.23 | 0.19 | 0.15 | 0.13 | 0.10 | + | + | + | + | + | + | + |
| 340 | 0.22 | 0.18 | 0.15 | 0.12 | 0.10 | + | + | + | + | + | + | + |
| 350 | 0.22 | 0.18 | 0.15 | 0.12 | 0.10 | + | + | + | + | + | + | + |
| 360 | 0.21 | 0.17 | 0.14 | 0.12 | + | + | + | + | + | + | + | + |
| 370 | 0.21 | 0.17 | 0.14 | 0.11 | + | + | + | + | + | + | + | + |
| 380 | 0.20 | 0.16 | 0.13 | 0.11 | + | + | + | + | + | + | + | + |
| 390 | 0.20 | 0.16 | 0.13 | 0.11 | + | + | + | + | + | + | + | + |
| 400 | 0.19 | 0.16 | 0.13 | 0.10 | + | + | + | + | + | + | + | + |

* signifies that $I_a/P$ = 0.50 should be used.
\+ signifies that $I_a/P$ = 0.10 should be used.

**Table 3-9. Adjustment factor ($F_p$) for pond and swamp areas that are spread throughout the watershed.** [6]

| Area of pond or swamp (%) | $F_p$ |
|---|---|
| 0.0 | 1.00 |
| 0.2 | 0.97 |
| 1.0 | 0.87 |
| 3.0 | 0.75 |
| 5.0 | 0.72 |

*Step 4: Determine $I_a/P$ from table 3-8.*

$I_a/P = 0.10$

*Step 5: Determine coefficients from table 3-7.*

$C_0 = 2.55323$
$C_1 = -0.61512$
$C_2 = -0.16403$

*Step 6: Calculate unit peak flow using equation 3-18.*

$$q_u = (0.000431)\ (10^{C_0 + C_1 \log t_c + C_2 (\log t_c)^2})$$

$$q_u = (0.000431)\ (10^{[2.55323 + (-0.61512) \log (0.8) + (-0.16403) [\log (0.8)]^2]})$$

$$q_u = 0.176\ m^3/s/km^2/mm$$

*Step 7: Calculate peak flow using equation 3-17.*

$$q_p = q_u A_k Q_D = (0.176)(3.3 + 2.8)(89) = 96\ m^3/s$$

*A computer solution for this example is presented in Appendix B.*



## 3.3 DEVELOPMENT OF DESIGN HYDROGRAPHS

This section discusses methods used to develop a design hydrograph. Hydrograph methods can be computationally involved so computer programs such as HEC-1, TR-20, TR-55, and HYDRAIN are almost exclusively used to generate runoff hydrographs (see chapter 11). Hydrographic analysis is performed when flow routing is important such as in the design of stormwater detention, other water quality facilities, and pump stations. They can also be used to evaluate flow routing through large storm drainage systems to more precisely reflect flow peaking conditions in each segment of complex systems. Reference 6 contains additional information on hydrographic methods.

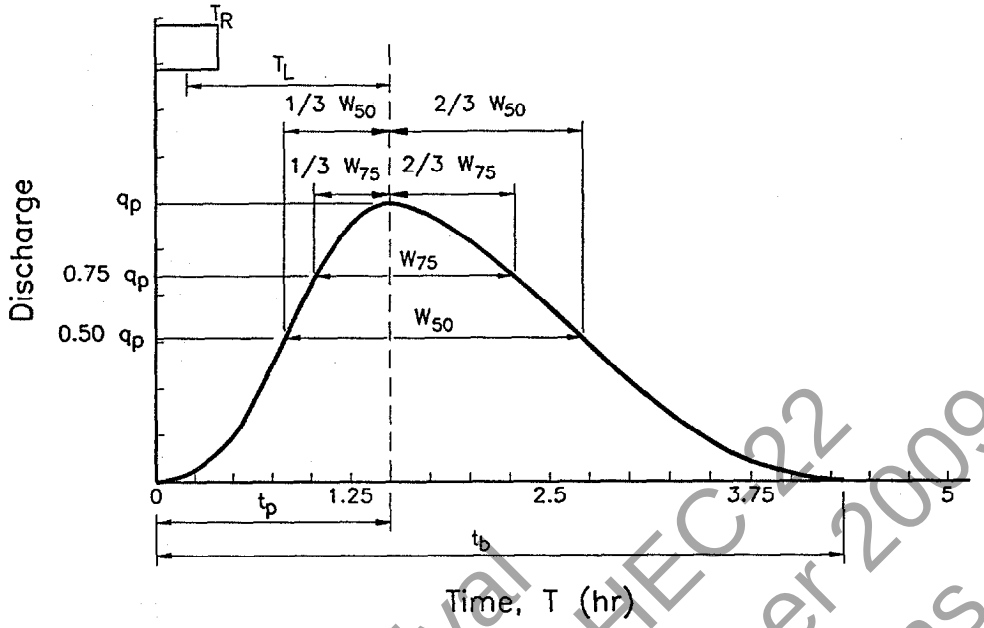


**Figure 3-6. Snyder synthetic hydrograph definition**



### 3.3.1 Unit Hydrograph Methods

A unit hydrograph is defined as the direct runoff hydrograph resulting from a rainfall event that has a specific temporal and spatial distribution and that lasts for a unit duration of time. The ordinates of the unit hydrograph are such that the volume of direct runoff represented by the area under the hydrograph is equal to one cm of runoff from the drainage area. [6] In the development of a unit hydrograph, there are several underlying assumptions made such as uniform rainfall intensity and duration over the entire watershed. To minimize the effects of non-uniform intensity, a large storm that encompasses the majority of the watershed should be employed. Additionally, storm movement can effect the runoff characteristics of the watershed. Storms moving down a long and narrow watersheds will produce a higher peak runoff rate and a longer time to peak. In order to overcome these limitations, unit hydrographs should be limited to drainage areas less than 2590 $km^2$ (1000 $mi^2$) [6]. Two synthetic unit hydrograph methods, Snyder's and SCS's, are discussed in this chapter.

#### 3.3.1.1 Snyder Synthetic Unit Hydrograph

This method, developed in 1938, has been used extensively by the Corps of Engineers and provides a means of generating a synthetic unit hydrograph. In the Snyder method, empirically defined terms and the physiographic characteristics of the drainage basin are used to determine a unit hydrograph. The key parameters which are explicitly calculated are the lag time, the unit hydrograph duration, the peak discharge, and the hydrograph time widths of 50 percent and 75 percent of the peak discharge. With these points, a characteristic unit hydrograph is sketched. The volume of this hydrograph is then checked to ensure it equals one centimeter of runoff. If it does not, it is adjusted accordingly. A typical Snyder hydrograph is shown in figure 3-6. In the figure:

| | | |
|---|---|---|
| $T_R$ | = | duration of unit excess rainfall, hr |
| $T_L$ | = | lag time from the centroid of the unit rainfall excess to the peak of the unit hydrograph, hr |
| $t_p$ | = | time to peak flow of hydrograph, hr |
| $W_{50}$, $W_{75}$ | = | time width of unit hydrograph at discharge equal to 50 percent and 75 percent, respectively, hr |
| $t_b$ | = | time duration of the unit hydrograph, hr |

The Snyder Unit Hydrograph was developed for watersheds in the Appalachian highlands; however, the general method has been successfully applied throughout the country by appropriate modification of empirical constants employed in the method [6]. Additional information and an example problem that describes the procedures for computing the Snyder Synthetic Unit Hydrograph can be found in HDS 2 [6].

### 3.3.1.2 SCS (NRCS) Tabular Hydrograph

The Soil Conservation Service (now known as the National Resources Conservation Service) has developed a tabular method which is used to estimate partial composite flood hydrographs at any point in a watershed. This method is generally applicable to small, nonhomogeneous areas which may be beyond the limitations of the Rational Method. It is applicable for estimating the effects of land use change in a portion of the watershed as well as estimating the effects of proposed structures [13].

The SCS Tabular Hydrograph method is based on a series of unit discharge hydrographs expressed in cubic meters of discharge per second per square kilometer (cubic feet of discharge per second per square mile) of watershed per millimeter (in) of runoff. A series of these unit discharge hydrographs are provided in reference 13 for a range of subarea times of concentration ($T_c$) from 0.1 hr to 2 hours, and reach travel times ($T_t$) from 0 to 3 hours. Table 3-10 provides one such tabulation.

Chapter 5 of reference 13 provides a detailed description of the tabular hydrograph method. In developing the tabular hydrograph, the watershed is divided into homogeneous subareas. Input parameters required for the procedure include, (1) the 24-hour rainfall amount, mm (in), (2) an appropriate rainfall distribution (I, IA, II, or III), (3) the runoff curve number, CN, (4) the time of concentration, $T_c$, (5) the travel time, $T_t$, and (6) the drainage area, km$^2$, (mi$^2$) for each subarea. The 24 hour rainfall amount, rainfall distribution, and the runoff curve number are used in equations 3-15 and 3-16 to determine the runoff depth in each subarea. The product of the runoff depth times drainage is multiplied times each tabular hydrograph value to determine the final hydrograph ordinate for a particular subarea. Subarea hydrographs are then added to determine the final hydrograph at a particular point in the watershed. Example 3-6 provides an illustration of the use of the tabular hydrograph method.

Assumptions and limitations inherent in the tabular method are as follows:

- Total area should be less than 800 hectares (2000 acres). Typically, subareas are far smaller than this because the subareas should have fairly homogeneous land use.
- Travel time is less than or equal to 3 hours.
- Time of concentration is less than or equal to 2 hours.
- Drainage areas of individual subareas differ by less than a factor of five.

**Table 3-10. Tabular hydrograph unit discharges in $m^3/s/km^2/mm$ for type II sto**
**(time of concentration - 0.5 hr; IA/P = 0.10)**

| Hydrograph Time (hr) | Travel Time (hrs.) | | | | | | | | |
|---|---|---|---|---|---|---|---|---|---|
| | 0.00 | 0.10 | 0.20 | 0.30 | 0.40 | 0.50 | 0.75 | 1.00 | 1.50 |
| 11.0 | 0.007 | 0.007 | 0.006 | 0.006 | 0.005 | 0.005 | 0.004 | 0.003 | 0.002 |
| 11.3 | 0.010 | 0.009 | 0.008 | 0.008 | 0.006 | 0.006 | 0.005 | 0.004 | 0.003 |
| 11.6 | 0.014 | 0.013 | 0.011 | 0.010 | 0.009 | 0.009 | 0.006 | 0.005 | 0.003 |
| 11.9 | 0.025 | 0.022 | 0.016 | 0.015 | 0.012 | 0.012 | 0.008 | 0.007 | 0.005 |
| 12.0 | 0.041 | 0.034 | 0.020 | 0.019 | 0.014 | 0.013 | 0.009 | 0.007 | 0.005 |
| 12.1 | 0.073 | 0.060 | 0.030 | 0.026 | 0.017 | 0.016 | 0.010 | 0.008 | 0.006 |
| 12.2 | 0.133 | 0.109 | 0.050 | 0.042 | 0.023 | 0.021 | 0.012 | 0.009 | 0.006 |
| 12.3 | 0.201 | 0.170 | 0.089 | 0.073 | 0.036 | 0.031 | 0.013 | 0.010 | 0.006 |
| 12.4 | 0.228 | 0.209 | 0.143 | 0.120 | 0.061 | 0.051 | 0.016 | 0.012 | 0.007 |
| 12.5 | 0.219 | 0.215 | 0.187 | 0.165 | 0.100 | 0.084 | 0.021 | 0.014 | 0.008 |
| 12.6 | 0.173 | 0.187 | 0.206 | 0.192 | 0.143 | 0.123 | 0.032 | 0.017 | 0.009 |
| 12.7 | 0.128 | 0.148 | 0.193 | 0.193 | 0.176 | 0.158 | 0.051 | 0.024 | 0.010 |
| 12.8 | 0.097 | 0.114 | 0.163 | 0.173 | 0.187 | 0.178 | 0.078 | 0.036 | 0.012 |
| 13.0 | 0.060 | 0.070 | 0.103 | 0.116 | 0.156 | 0.163 | 0.137 | 0.081 | 0.019 |
| 13.2 | 0.041 | 0.047 | 0.064 | 0.074 | 0.105 | 0.117 | 0.161 | 0.133 | 0.038 |
| 13.4 | 0.032 | 0.034 | 0.044 | 0.049 | 0.068 | 0.077 | 0.141 | 0.155 | 0.075 |
| 13.6 | 0.026 | 0.028 | 0.033 | 0.036 | 0.046 | 0.037 | 0.105 | 0.139 | 0.116 |
| 13.8 | 0.023 | 0.024 | 0.027 | 0.028 | 0.034 | 0.029 | 0.073 | 0.106 | 0.139 |
| 14.0 | 0.020 | 0.021 | 0.023 | 0.024 | 0.028 | 0.023 | 0.050 | 0.074 | 0.133 |
| 14.3 | 0.018 | 0.018 | 0.019 | 0.020 | 0.022 | 0.019 | 0.033 | 0.044 | 0.097 |
| 14.6 | 0.016 | 0.016 | 0.017 | 0.017 | 0.019 | 0.016 | 0.024 | 0.029 | 0.060 |
| 15.0 | 0.014 | 0.014 | 0.015 | 0.015 | 0.016 | 0.014 | 0.019 | 0.021 | 0.033 |
| 15.5 | 0.012 | 0.012 | 0.013 | 0.013 | 0.014 | 0.012 | 0.015 | 0.016 | 0.021 |
| 16.0 | 0.011 | 0.011 | 0.012 | 0.012 | 0.012 | 0.011 | 0.013 | 0.014 | 0.016 |
| 16.5 | 0.010 | 0.010 | 0.010 | 0.010 | 0.011 | 0.010 | 0.012 | 0.012 | 0.014 |
| 17.0 | 0.009 | 0.009 | 0.009 | 0.009 | 0.009 | 0.009 | 0.011 | 0.010 | 0.012 |
| 17.5 | 0.009 | 0.009 | 0.009 | 0.009 | 0.009 | 0.009 | 0.009 | 0.009 | 0.011 |
| 18.0 | 0.008 | 0.008 | 0.008 | 0.008 | 0.009 | 0.007 | 0.009 | 0.008 | 0.010 |
| 19.0 | 0.007 | 0.007 | 0.007 | 0.007 | 0.007 | 0.006 | 0.008 | 0.007 | 0.009 |
| 20.0 | 0.006 | 0.006 | 0.006 | 0.006 | 0.006 | 0.006 | 0.007 | 0.005 | 0.007 |
| 22.0 | 0.005 | 0.005 | 0.005 | 0.005 | 0.005 | 0.005 | 0.005 | 0.005 | 0.006 |
| 26.0 | 0.000 | 0.000 | 0.000 | 0.000 | 0.000 | 0.000 | 0.000 | 0.000 | 0.002 |

Modified from TR-55 [13]

***Example 3-6***

***Given:*** ***A watershed with three subareas. Subareas 1 and 2 both drain into subarea 3. Basin data for the three subareas are as follows:***

| | *Area ($km^2$)* | *$t_c$ (hr)* | *$T_t$ (hr)* | *CN* |
|---|---|---|---|---|
| *Subarea 1* | *1.0* | *0.5* | *---* | *75* |
| *Subarea 2* | *0.5* | *0.5* | *---* | *65* |
| *Subarea 3* | *2.8* | *0.5* | *0.20* | *70* |

*A time of concentration, $t_c$, of 0.5 hr, an IA/P value of 0.10, and a type II storm distribution are assumed for convenience in all three subareas. The travel time applies to the reach for the corresponding area; therefore, the travel time in subarea 3 will apply to the tabular hydrographs routed from subareas 1 and 2.*

***Find:*** *The outlet hydrograph for a 150-mm storm.*

***Solution:***

*Step 1:* *Calculate the retention for each of the subareas using equation (3-16).*

$$S_R = 25.4\ (1000/CN - 10)$$

*Subarea 1.* $S_R = 25.4\ (1000/75 - 10) = 85$ *mm*
*Subarea 2.* $S_R = 25.4\ (1000/65 - 10) = 137$ *mm*
*Subarea 3.* $S_R = 25.4\ (1000/70 - 10) = 109$ *mm*

*Step 2:* *Calculate the depth of runoff for each of the subareas using equation (3-15).*

$$Q_D = [P - 0.2\ (S_R)]^2 / [P + 0.8\ (S_R)]$$

*Subarea 1.* $Q_D = [150 - 0.2\ (85)]^2/[150 + 0.8\ (85)] = 81$ *mm*
*Subarea 2.* $Q_D = [150 - 0.2\ (137)]^2/[150 + 0.8\ (137)] = 58$ *mm*
*Subarea 3.* $Q_D = [150 - 0.2\ (109)]^2/[150 + 0.8\ (109)] = 69$ *mm*

*Step 3:* *Multiply the appropriate tabular hydrograph values from table 3-10 by the subarea areas and runoff depths and sum the values for each time to give the composite hydrograph at the end of subarea 3. For example, the hydrograph flow contributed from subarea 1 ($t_c$ = 0.5 h, $T_t$ = 0.20 h) at 12.0 h is calculated as the product of the tabular value, the area, and the runoff depth, or 0.020 (1.0)(81) = 1.6 $m^3/s$.*

*The following table lists the subarea and composite hydrographs. Please note that this example does not use every hydrograph time ordinate.*

*Flow at specified time ($m^3/s$)*

| | 11 (hr) | 12 (hr) | 12.2 (hr) | 12.4 (hr) | 12.5 (hr) | 12.6 (hr) | 12.8 (hr) | 13 (hr) | 14 (hr) | 16 (hr) | 20 (hr) |
|---|---|---|---|---|---|---|---|---|---|---|---|
| *Subarea 1* | 0.5 | 1.6 | 4.1 | 11.6 | 15.1 | 16.7 | 13.2 | 8.3 | 1.9 | 1.0 | 0.5 |
| *Subarea 2* | 0.2 | 0.6 | 1.5 | 4.1 | 5.4 | 6.0 | 4.7 | 3.0 | 0.7 | 0.3 | 0.2 |
| *Subarea 3* | 1.4 | 7.9 | 25.7 | 44.0 | 42.3 | 33.4 | 18.7 | 11.6 | 3.9 | 2.1 | 1.2 |
| *Total* | 2.1 | 10.1 | 31.3 | 59.7 | 62.8 | 56.1 | 36.6 | 22.9 | 6.5 | 3.4 | 1.9 |

3.3.1.3 SCS (NRCS) Synthetic Unit Hydrograph

The Soil Conservation Service (now known as the National Resources Conservation Service) has developed a synthetic unit hydrograph procedure that has been widely used in their conservation and flood control work. The unit hydrograph used by this method is based upon an analysis of a large number of natural unit hydrographs from a broad cross section of geographic locations and hydrologic regions. This method is easy to apply. The only parameters that need to be determined are the peak discharge and the time to peak. A standard unit hydrograph is constructed using these two parameters.

For the development of the SCS Unit Hydrograph, the curvilinear unit hydrograph is approximated by a triangular unit hydrograph (UH) that has similar characteristics. Figure 3-7 shows a comparison of the two dimensionless unit hydrographs. Even though the time base of the triangular UH is 8/3 of the time to peak and the time base of the curvilinear UH is five times the time to peak, the area under the two UH types is the same.

The area under a hydrograph equals the volume of direct runoff $Q_D$ which is one centimeter for a unit hydrograph. The peak flow is calculated as follows:

$$q_p = \frac{K_c A_k Q_D}{t_p} \tag{3-20}$$

where:
- $q_p$ = peak flow, $m^3/s$ ($ft^3/s$)
- $A_k$ = drainage area, $km^2$ ($mi^2$)
- $Q_D$ = volume of direct runoff ( = 1 for unit hydrograph), cm (in)
- $t_p$ = time to peak, hr
- $K_c$ = 2.083 (483.5 in English units)

The constant 2.083 reflects a unit hydrograph that has 3/8 of its area under the rising limb. For mountainous watersheds, the fraction could be expected to be greater than 3/8, and therefore the constant may be near 2.6. For flat, swampy areas, the constant may be on the order of 1.3.

Time to peak, $t_p$, can be expressed in terms of time of concentration, $t_c$, as follows:

$$t_p = \frac{2}{3} t_c \tag{3-21}$$

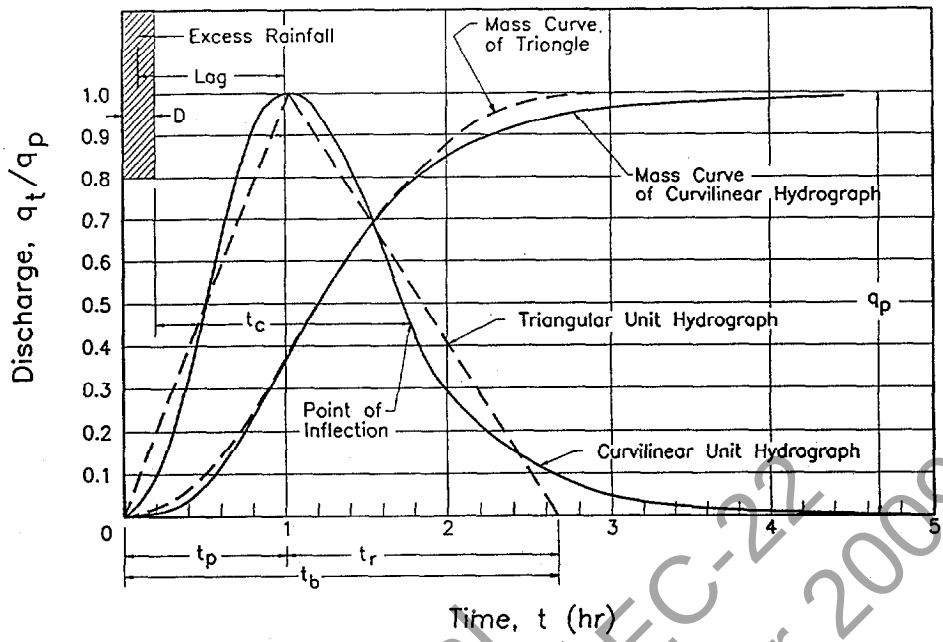


**Figure 3-7. Dimensionless Curvilinear SCS synthetic unit hydrograph and equivalent triangular hydrograph**



Expressing $q_p$ in terms of $t_c$ rather than $t_p$ yields:

$$q_p = \frac{3.125\ A_k\ Q_D}{t_c} \tag{3-22}$$

*Example 3-7*

***Given:*** *The following watershed conditions:*

- *Watershed is commercially developed.*
- *Watershed area = 1.2 km².*
- *Time of concentration = 1.34 hr.*

***Find:*** *The triangular SCS unit hydrograph.*

***Solution:***

*Step 1: Calculate peak flow using equation 3-22.*

$$q_p = \frac{3.125\ A_k\ Q_D}{t_c} = \frac{3.125\ (1.2)\ (1)}{1.34} = 2.8\ m^3/s$$

*Step 2:* *Calculate time to peak using equation 3-21.*

$$t_p = \frac{2}{3} t_c = \frac{2}{3} (1.34) = 0.893 \ hr$$

*Step 3:* *Calculate time base of UH.*

$$t_b = \frac{8}{3} (0.893) = 2.38 \ hr$$

*Step 4:* *Draw resulting triangular UH. (see figure 3-8)*

*Note: The curvilinear SCS UH is more commonly used and is incorporated into many computer programs (see chapter 11).*

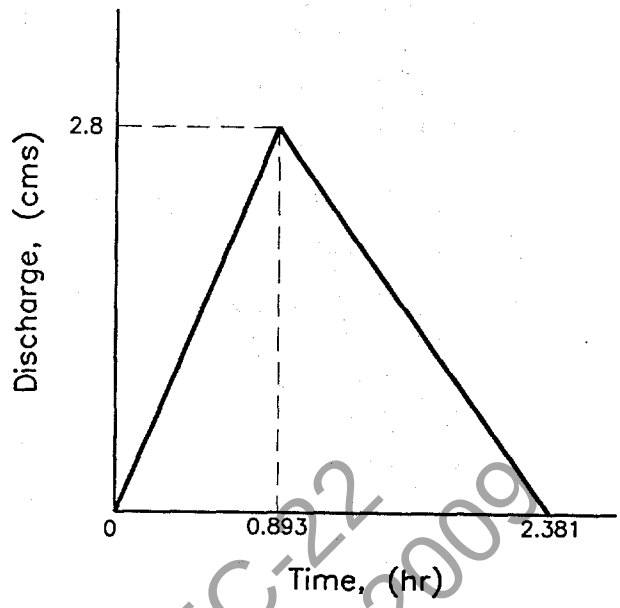


**Figure 3-8. Example: The triangular unit hydrograph**



3.3.1.4 Direct Runoff Hydrograph

With a given rainfall hyetograph and with the development of the unit hydrograph, a design direct runoff outflow hydrograph of the watershed can be generated. The unit hydrograph represents the response of the watershed due to one unit (one centimeter) of excess rainfall, whereas the direct runoff outflow hydrograph represents the response of the watershed due to the excess rainfall from a particular storm event. The excess rainfall from the storm event is represented by a hyetograph (section 3.1.2).

In applying unit hydrograph methods, the ordinates of a unit hydrograph are multiplied by the depth of rainfall over a unit duration of time. For complex storms, convolution is needed to combine runoff hydrographs resulting from precipitation over different time periods within a storm.

Convolution is the process by which the design storm is combined with the unit hydrograph to produce the direct runoff hydrograph. Conceptually, it is a process of multiplication, translation with time, and addition. That is, the first burst of rainfall excess of duration D is multiplied by the ordinates of the unit hydrograph (UH), the UH is then translated a time length of D, and the next burst of rainfall excess is multiplied by the UH. After the UH has been translated for all bursts of rainfall excess of duration D, the results of the multiplications are summed for each time interval. This process of multiplication, translation, and addition is the means of deriving a design runoff hydrograph from the rainfall excess and the UH. [6] Reference 6 contains additional information on convolution. Additionally, the following example demonstrates the convolution process of combining a unit hydrograph with a rainfall hyetograph to form a resulting outflow hydrograph.

**Example 3-8**

*Given:*
- *Excess rainfall hyetograph shown in figure 3.2*
- *The following unit hydrograph:*

| Time, t (hr) | Discharge, Q ($m^3/s$) |
|---|---|
| 0 | 0 |
| 1 | 30 |
| 2 | 10 |
| 3 | 0 |

***Find:*** *The resulting convoluted direct runoff outflow hydrograph.*

***Solution:***

*Step 1:* *The unit hydrograph and excess rainfall are displayed in figure 3-9 (a).*

*Step 2:* *Using the following table, the total direct runoff outflow hydrograph will be developed. Column one lists the time increments. Column two lists the ordinates of the unit hydrograph. Column three calculates the direct runoff for the first hour of excess precipitation. The values are the ordinates of the UH multiplied by the amount of excess precipitation for the first hour. Column four is produced as was column three except the amount of precipitation is for the second hour of excess rainfall and the time is lagged by one hour. Column five is lagged by two hours and contains the values for the third hour of precipitation. Finally, the total direct runoff outflow hydrograph is determined by summing the values across each row for columns three through five.*

| Time, t (hr) | Unit Hydrograph Discharge, Q ($m^3/s$) | Direct runoff for first hour, DR ($m^3/s$) | Direct runoff for second hour, DR ($m^3/s$) | Direct runoff for third hour, DR ($m^3/s$) | Total Direct Runoff Outflow Hydrograph ($m^3/s$) | |
|---|---|---|---|---|---|---|
| (1) | (2) | (3) | (4) | (5) | (6) | (7) |
| 0 | 0 | (0.5)(0) = 0 | -- | -- | 0 | = 0 |
| 1 | 30 | (0.5)(30) = 15 | (1.0)(0) = 0 | -- | 15+0 | = 15 |
| 2 | 10 | (0.5)(10) = 5 | (1.0)(30) = 30 | (1.5)(0) = 0 | 5+30+0 | = 35 |
| 3 | 0 | (0.5)(0) = 0 | (1.0)(10) = 10 | (1.5)(30) = 45 | 0+10+45 | = 55 |
| 4 | | | (1.0)(0) = 0 | (1.5)(10) = 15 | 0+15 | = 15 |
| 5 | | | | (1.5)(0) = 0 | 0 | = 0 |

*The final total direct runoff outflow hydrograph is shown in figure 3-9. (b).*

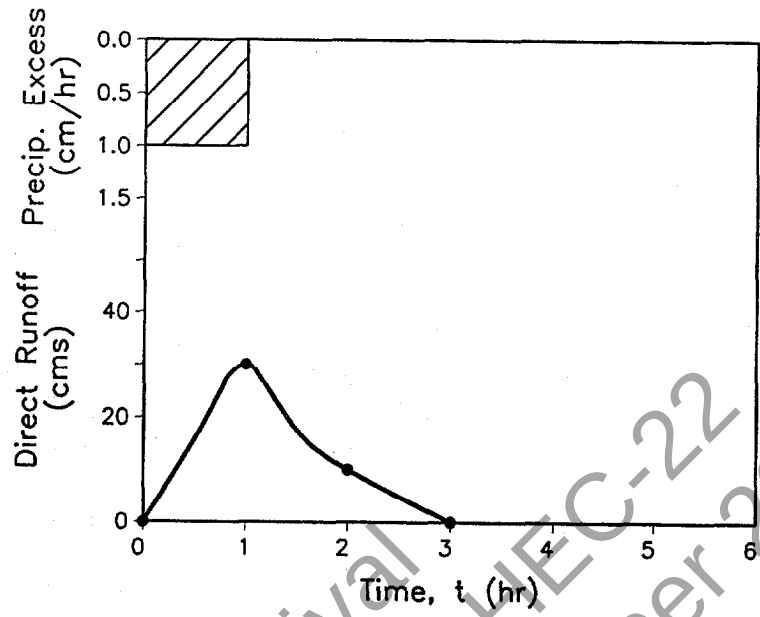


a. Incremental Runoff

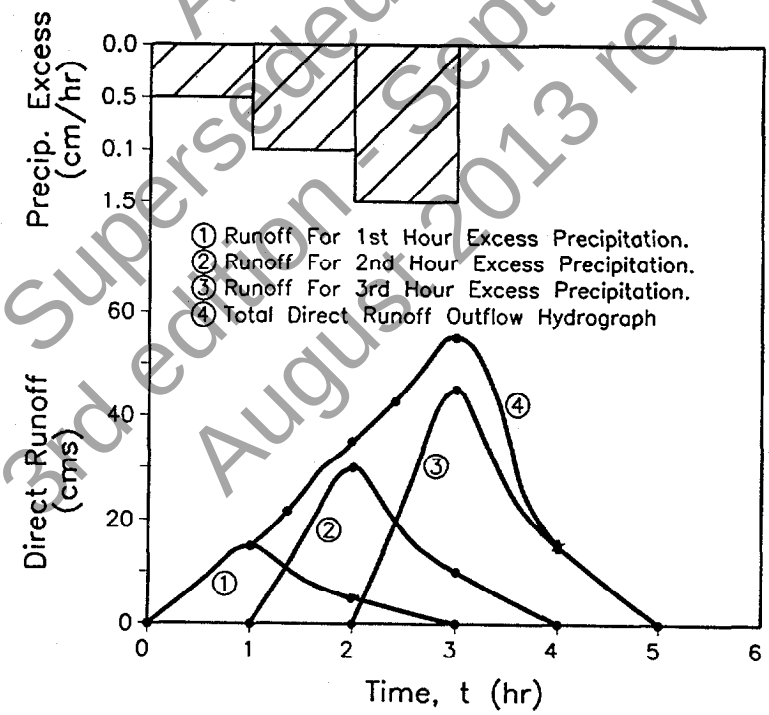


b. Total Runoff

**Figure 3-9. Example: Convolution of unit hydrograph.**

**Table 3-11. USGS dimensionless hydrograph coordinates.**

| Abscissa | Ordinate | Abscissa | Ordinate |
|---|---|---|---|
| 0.0 | 0.00 | 1.3 | 0.65 |
| 0.1 | 0.04 | 1.4 | 0.54 |
| 0.2 | 0.08 | 1.5 | 0.44 |
| 0.3 | 0.14 | 1.6 | 0.36 |
| 0.4 | 0.21 | 1.7 | 0.30 |
| 0.5 | 0.37 | 1.8 | 0.25 |
| 0.6 | 0.56 | 1.9 | 0.21 |
| 0.7 | 0.76 | 2.0 | 0.17 |
| 0.8 | 0.92 | 2.1 | 0.13 |
| 0.9 | 1.00 | 2.2 | 0.10 |
| 1.0 | 0.98 | 2.3 | 0.06 |
| 1.1 | 0.90 | 2.4 | 0.03 |
| 1.2 | 0.78 | 2.5 | 0.00 |



### 3.3.2 USGS Nationwide Urban Hydrograph

The USGS nationwide urban hydrograph method uses information developed by the USGS that approximates the shape and characteristics of hydrographs. Information required for using this method are: (1) dimensionless hydrograph ordinates; (2) time lag; and (3) peak flow. Table 3-11 lists default values for the dimensionless hydrograph ordinates derived from the nationwide urban hydrograph study. These values provide the shape of the dimensionless hydrograph. [17]

Time lag is computed using the following relationship:

$$T_L = K_L \, L_M^{0.62} \, SL^{-0.31} \, (13 - BDF)^{0.47} \qquad (3\text{-}23)$$

where:
- $T_L$ = time lag, hr
- $K_L$ = 0.38 (0.85 in English units)
- $L_M$ = main channel length, km (mi)
- $SL$ = main channel slope, m/km (ft/mi)
- $BDF$ = basin development factor (see discussion in section 3.2.3)

The peak flow can be computed using one of the methods described in section 3-2. Application of this method proceeds by first multiplying the abscissae in table 3-10 by the time lag between the centroid of the rainfall and the centroid of the runoff computed using equation 3-23. Then the ordinates in table 3-10 are multiplied by the peak flow computed using an appropriate method. The resultant is the design hydrograph. The following example illustrates the design of a hydrograph using the USGS nationwide urban hydrograph method.

*Example 3-9*

***Given:*** ***Site data from example 3-3 and supplementary data as follows:***

*Existing conditions (unimproved)*

- *10 - year peak flow = 0.55 $m^3/s$ (19.4 $ft^3/s$)*
- $L_M$ = *1.1 km (0.68 mi)*
- *SL = 3.6 m/km (19 ft/mi)*
- *BDF = 0*

*Proposed conditions (improved)*

- *10 - year peak flow = 0.88 $m^3/s$ (31.2 $ft^3/s$)*
- $L_M$ = *0.9 km (0.56 mi)*
- *SL = 4.2 m/km (22 ft/mi)*
- *BDF = 6*

***Find:*** *The ordinates of the USGS nationwide urban hydrograph as applied to the site.*

***Solution:***

*Step 1: Calculate time lag with equation 3-23.*

*Existing conditions (unimproved):*

$$T_L = K_L L_M^{0.62} SL^{-0.31} (13 - BDF)^{0.47}$$
$$= 0.38 (1.1)^{0.62} (3.6)^{-0.31} (13 - 0)^{0.47}$$
$$= 0.89\,hr$$

*Proposed conditions (improved)*

$$T_L = K_L L_M^{0.62} SL^{-0.31} (13 - BDF)^{0.47}$$
$$= 0.38 (0.9)^{0.62} (4.2)^{-0.31} (13 - 6)^{0.47}$$
$$= 0.57\,hr$$

*Step 2: Multiply lag time by abscissa and peak flow by ordinate in table 3-10 to form hydrograph coordinates as illustrated in the following tables:*

*USGS Nationwide Urban Hydrograph for existing conditions (unimproved):*

| Time (hr) | Flow ($m^3/s$) | Time (hr) | Flow ($m^3/s$) |
|---|---|---|---|
| (0.0)(0.89) = 0.00 | (0.00)(0.55) = 0.00 | (1.3)(0.89) = 1.16 | (0.65)(0.55) = 0.36 |
| (0.1)(0.89) = 0.09 | (0.04)(0.55) = 0.02 | (1.4)(0.89) = 1.25 | (0.54)(0.55) = 0.30 |
| (0.2)(0.89) = 0.18 | (0.08)(0.55) = 0.04 | (1.5)(0.89) = 1.34 | (0.44)(0.55) = 0.24 |
| (0.3)(0.89) = 0.27 | (0.14)(0.55) = 0.08 | (1.6)(0.89) = 1.42 | (0.36)(0.55) = 0.20 |
| (0.4)(0.89) = 0.36 | (0.21)(0.55) = 0.12 | (1.7)(0.89) = 1.51 | (0.30)(0.55) = 0.17 |
| (0.5)(0.89) = 0.45 | (0.37)(0.55) = 0.20 | (1.8)(0.89) = 1.60 | (0.25)(0.55) = 0.14 |
| (0.6)(0.89) = 0.53 | (0.56)(0.55) = 0.31 | (1.9)(0.89) = 1.69 | (0.21)(0.55) = 0.12 |
| (0.7)(0.89) = 0.62 | (0.76)(0.55) = 0.42 | (2.0)(0.89) = 1.78 | (0.17)(0.55) = 0.09 |
| (0.8)(0.89) = 0.71 | (0.92)(0.55) = 0.51 | (2.1)(0.89) = 1.87 | (0.13)(0.55) = 0.07 |
| (0.9)(0.89) = 0.80 | (1.00)(0.55) = 0.55 | (2.2)(0.89) = 1.96 | (0.10)(0.55) = 0.06 |
| (1.0)(0.89) = 0.89 | (0.98)(0.55) = 0.54 | (2.3)(0.89) = 2.05 | (0.06)(0.55) = 0.03 |
| (1.1)(0.89) = 0.98 | (0.90)(0.55) = 0.50 | (2.4)(0.89) = 2.14 | (0.03)(0.55) = 0.02 |
| (1.2)(0.89) = 1.07 | (0.78)(0.55) = 0.43 | (2.5)(0.89) = 2.23 | (0.00)(0.55) = 0.00 |

*USGS Nationwide Urban Hydrograph for proposed conditions (improved):*

| Time (hr) | Flow ($m^3/s$) | Time (hr) | Flow ($m^3/s$) |
|---|---|---|---|
| (0.0)(0.57) = 0.00 | (0.00)(0.88) = 0.00 | (1.3)(0.57) = 0.74 | (0.65)(0.88) = 0.57 |
| (0.1)(0.57) = 0.06 | (0.04)(0.88) = 0.04 | (1.4)(0.57) = 0.80 | (0.54)(0.88) = 0.48 |
| (0.2)(0.57) = 0.11 | (0.08)(0.88) = 0.07 | (1.5)(0.57) = 0.86 | (0.44)(0.88) = 0.39 |
| (0.3)(0.57) = 0.17 | (0.14)(0.88) = 0.12 | (1.6)(0.57) = 0.91 | (0.36)(0.88) = 0.32 |
| (0.4)(0.57) = 0.23 | (0.21)(0.88) = 0.18 | (1.7)(0.57) = 0.97 | (0.30)(0.88) = 0.26 |
| (0.5)(0.57) = 0.29 | (0.37)(0.88) = 0.33 | (1.8)(0.57) = 1.03 | (0.25)(0.88) = 0.22 |
| (0.6)(0.57) = 0.34 | (0.56)(0.88) = 0.49 | (1.9)(0.57) = 1.08 | (0.21)(0.88) = 0.18 |
| (0.7)(0.57) = 0.40 | (0.76)(0.88) = 0.67 | (2.0)(0.57) = 1.14 | (0.17)(0.88) = 0.15 |
| (0.8)(0.57) = 0.46 | (0.92)(0.88) = 0.81 | (2.1)(0.57) = 1.20 | (0.13)(0.88) = 0.11 |
| (0.9)(0.57) = 0.51 | (1.00)(0.88) = 0.88 | (2.2)(0.57) = 1.25 | (0.10)(0.88) = 0.09 |
| (1.0)(0.57) = 0.57 | (0.98)(0.88) = 0.86 | (2.3)(0.57) = 1.31 | (0.06)(0.88) = 0.05 |
| (1.1)(0.57) = 0.63 | (0.90)(0.88) = 0.79 | (2.4)(0.57) = 1.37 | (0.03)(0.88) = 0.03 |
| (1.2)(0.57) = 0.68 | (0.78)(0.88) = 0.69 | (2.5)(0.57) = 1.43 | (0.00)(0.88) = 0.00 |

*The final hydrographs are shown in figure 3-10. A computer solution for the existing conditions is presented in Appendix B.*

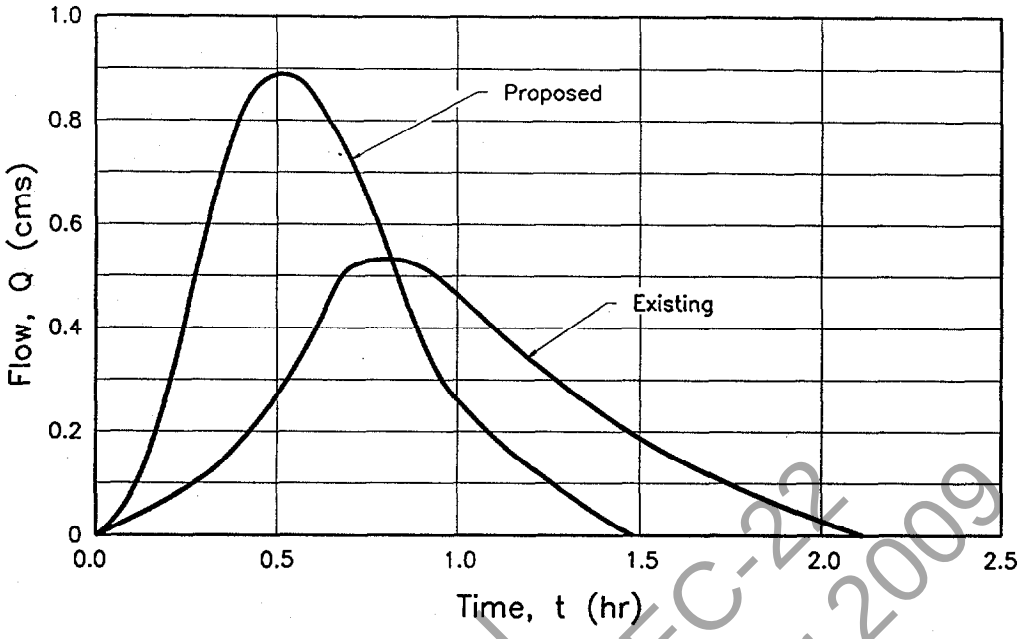


**Figure 3-10. USGS Nationwide Urban Hydrograph for existing (unimproved) and proposed (improved) conditions.**

# 4. PAVEMENT DRAINAGE

Effective drainage of highway pavements is essential to the maintenance of highway service level and to traffic safety. Water on the pavement can interrupt traffic, reduce skid resistance, increase potential for hydroplaning, limit visibility due to splash and spray, and cause difficulty in steering a vehicle when the front wheels encounter puddles [18].

Pavement drainage requires consideration of surface drainage, gutter flow, and inlet capacity. The design of these elements is dependent on storm frequency and the allowable spread of storm water on the pavement surface. This chapter presents design guidance for the design of these elements. Most of the information presented here was originally published in HEC-12, Drainage of Highway Pavements [19], and AASHTO's Model Drainage Manual [18].

## 4.1 DESIGN FREQUENCY AND SPREAD

Two of the more significant variables considered in the design of highway pavement drainage are the frequency of the design runoff event and the allowable spread of water on the pavement. A related consideration is the use of an event of lesser frequency to check the drainage design.

Spread and design frequency are not independent. The implications of the use of a criteria for spread of one-half of a traffic lane is considerably different for one design frequency than for a lesser frequency. It also has different implications for a low-traffic, low-speed highway than for a higher classification highway. These subjects are central to the issue of highway pavement drainage and important to highway safety.



### 4.1.1 Selection of Design Frequency and Design Spread

The objective of highway storm drainage design is to provide for safe passage of vehicles during the design storm event. The design of a drainage system for a curbed highway pavement section is to collect runoff in the gutter and convey it to pavement inlets in a manner that provides reasonable safety for traffic and pedestrians at a reasonable cost. As spread from the curb increases, the risks of traffic accidents and delays, and the nuisance and possible hazard to pedestrian traffic increase.

The process of selecting the recurrence interval and spread for design involves decisions regarding acceptable risks of accidents and traffic delays and acceptable costs for the drainage system. Risks associated with water on traffic lanes are greater with high traffic volumes, high speeds, and higher highway classifications than with lower volumes, speeds, and highway classifications.

A summary of the major considerations that enter into the selection of design frequency and design spread follows:

1. The classification of the highway is a good starting point in the selection process since it defines the public's expectations regarding water on the pavement surface. Ponding on traffic lanes of high-speed, high-volume highways is contrary to the public's expectations and thus the risks of accidents and the costs of traffic delays are high.

2. Design speed is important to the selection of design criteria. At speeds greater than 70 km/hr (44 mi/hr), it has been shown that water on the pavement can cause hydroplaning.

3. Projected traffic volumes are an indicator of the economic importance of keeping the highway open to traffic. The costs of traffic delays and accidents increase with increasing traffic volumes.

4. The intensity of rainfall events may significantly affect the selection of design frequency and spread. Risks associated with the spread of water on pavements may be less in arid areas subject to high intensity thunderstorm events than in areas accustomed to frequent but less intense events.

5. Capital costs are neither the least nor last consideration. Cost considerations make it necessary to formulate a rational approach to the selection of design criteria. "Tradeoffs" between desirable and practicable criteria are sometimes necessary because of costs. In particular, the costs and feasibility of providing for a given design frequency and spread may vary significantly between projects. In some cases, it may be practicable to significantly upgrade the drainage design and reduce risks at moderate costs. In other instances, such as where extensive outfalls or pumping stations are required, costs may be very sensitive to the criteria selected for use in design.

Other considerations include inconvenience, hazards, and nuisances to pedestrian traffic. These considerations should not be minimized and, in some locations such as in commercial areas, may assume major importance. Local design practice may also be a major consideration since it can affect the feasibility of designing to higher standards, and it influences the public's perception of acceptable practice.

The relative elevation of the highway and surrounding terrain is an additional consideration where water can be drained only through a storm drainage system, as in underpasses and depressed sections. The potential for ponding to hazardous depths should be considered in selecting the frequency and spread criteria and in checking the design against storm runoff events of lesser frequency than the design event.

Spread on traffic lanes can be tolerated to greater widths where traffic volumes and speeds are low. Spreads of one-half of a traffic lane or more are usually considered a minimum type design for low-volume local roads.

The selection of design criteria for intermediate types of facilities may be the most difficult. For example, some arterials with relatively high traffic volumes and speeds may not have shoulders which will convey the design runoff without encroaching on the traffic lanes. In these instances, an assessment of the relative risks and costs of various design spreads may be helpful in selecting appropriate design criteria. Table 4-1 provides suggested minimum design frequencies and spread based on the type of highway and traffic speed.

The recommended design frequency for depressed sections and underpasses where ponded water can be removed only through the storm drainage system is a 50-year frequency event. The use of a lesser frequency event, such as a 100-year storm, to assess hazards at critical locations where water can pond to appreciable depths is commonly referred to as a check storm or check event.

### 4.1.2 Selection of Check Storm and Spread

A check storm should be used any time runoff could cause unacceptable flooding during less frequent events. Also, inlets should always be evaluated for a check storm when a series of inlets terminates at

**Table 4-1. Suggested minimum design frequency and spread.**

| ROAD CLASSIFICATION | | DESIGN FREQUENCY | DESIGN SPREAD |
|---|---|---|---|
| High Volume or | < 70 km/hr (45 mph) | 10-year | Shoulder + 1 m (3 ft) |
| Divided or Bi- | > 70 km/hr (45 mph) | 10-year | Shoulder |
| Directional | Sag Point | 50-year | Shoulder + 1 m (3 ft) |
| | < 70 km/hr (45 mph) | 10-year | 1/2 Driving Lane |
| Collector | > 70 km/hr (45 mph) | 10-year | Shoulder |
| | Sag Point | 10-year | 1/2 Driving Lane |
| | Low ADT | 5-year | 1/2 Driving Lane |
| Local Streets | High ADT | 10-year | 1/2 Driving Lane |
| | Sag Point | 10-year | 1/2 Driving Lane |

a sag vertical curve where ponding to hazardous depths could occur.

The frequency selected for the check storm should be based on the same considerations used to select the design storm, i.e., the consequences of spread exceeding that chosen for design and the potential for ponding. Where no significant ponding can occur, check storms are normally unnecessary.

Criteria for spread during the check event are: 1) one lane open to traffic during the check storm event, and 2) one lane free of water during the check storm event. These criteria differ substantively, but each sets a standard by which the design can be evaluated.



## 4.2 SURFACE DRAINAGE

When rain falls on a sloped pavement surface, it forms a thin film of water that increases in thickness as it flows to the edge of the pavement. Factors which influence the depth of water on the pavement are the length of flow path, surface texture, surface slope, and rainfall intensity. As the depth of water on the pavement increases, the potential for vehicular hydroplaning increases. For the purposes of highway drainage, a discussion of hydroplaning is presented and design guidance for the following drainage elements is presented:

- longitudinal pavement slope
- cross or transverse pavement slope
- curb and gutter design
- roadside and median ditches
- bridge decks
- median barriers
- impact attenuators

Additional technical information on the mechanics of surface drainage can be found in reference 20.

### 4.2.1 Hydroplaning

As the depth of water flowing over a roadway surface increases, the potential for hydroplaning increases. When a rolling tire encounters a film of water on the roadway, the water is channeled through the tire tread pattern and through the surface roughness of the pavement. Hydroplaning occurs when the drainage capacity of the tire tread pattern and the pavement surface is exceeded and the water begins to build up in front of the tire. As the water builds up, a water wedge is created and this wedge produces a hydrodynamic force which can lift the tire off the pavement surface. This is considered as full dynamic hydroplaning and, since water offers little shear resistance, the tire loses its tractive ability and the driver has a loss of control of the vehicle.

Hydroplaning is a function of the water depth, roadway geometrics, vehicle speed, tread depth, tire inflation pressure, and conditions of the pavement surface. It has been shown that hydroplaning can occur at speeds of 89 km/hr (55 mph) with a water depth of 2 mm (0.08 in). [20] The hydroplaning potential of a roadway surface can be reduced by the following:

1) Design the highway geometries to reduce the drainage path lengths of the water flowing over the pavement. This will prevent flow build-up.

2) Increase the pavement surface texture depth by such methods as grooving of portland cement concrete. An increase of pavement surface texture will increase the drainage capacity at the tire pavement interface.

3) The use of open graded asphaltic pavements has been shown to greatly reduce the hydroplaning potential of the roadway surface. This reduction is due to the ability of the water to be forced through the pavement under the tire. This releases any hydrodynamic pressures that are created and reduces the potential for the tire to hydroplane.

4) The use of drainage structures along the roadway to capture the flow of water over the pavement will reduce the thickness of the film of water and reduce the hydroplaning potential of the roadway surface.

### 4.2.2 Longitudinal Slope

Experience has shown that the recommended minimum values of roadway longitudinal slope given in the AASHTO Policy on Geometric Design [21] will provide safe, acceptable pavement drainage. In addition, the following general guidelines are presented:

1. A minimum longitudinal gradient is more important for a curbed pavement than for an uncurbed pavement since the water is constrained by the curb. However, flat gradients on uncurbed pavements can lead to a spread problem if vegetation is allowed to build up along the pavement edge.

2. Desirable gutter grades should not be less than 0.5 percent for curbed pavements with an absolute minimum of 0.3 percent. Minimum grades can be maintained in very flat terrain by use of a rolling profile, or by warping the cross slope to achieve rolling gutter profiles.

3. To provide adequate drainage in sag vertical curves, a minimum slope of 0.3 percent should be maintained within 15 meters (50 ft) of the low point of the curve. This is accomplished where the

length of the curve in meters divided by the algebraic difference in grades in percent (K) is equal to or greater than 50 (167 in English units). This is represented as:

$$K = \frac{L}{G_2 - G_1} \tag{4-1}$$

where: K = vertical curve constant m/percent (ft/percent)
L = horizontal length of curve, m (ft)
$G_i$ = grade of roadway, percent

### 4.2.3 Cross (Transverse) Slope

Table 4-2 indicates an acceptable range of cross slopes as specified in AASHTO's policy on geometric design of highways and streets.[21] These cross slopes are a compromise between the need for reasonably steep cross slopes for drainage and relatively flat cross slopes for driver comfort and safety. These cross slopes represent standard practice. Reference 21 should be consulted before deviating from these values.

As reported in *Pavement and Geometric Design Criteria for Minimizing Hydroplaning*[22], cross slopes of 2 percent have little effect on driver effort in steering or on friction demand for vehicle stability. Use of a cross slope steeper than 2 percent on pavements with a central crown line is not desirable. In areas of intense rainfall, a somewhat steeper cross slope (2.5 percent) may be used to facilitate drainage.

On multi-lane highways where three (3) lanes or more are sloped in the same direction, it is desirable to counter the resulting increase in flow depth by increasing the cross slope of the outermost lanes. The two (2) lanes adjacent to the crown line should be pitched at the normal slope, and successive lane pairs, or portions thereof outward, should be increased by about 0.5 to 1 percent. The maximum pavement cross slope should be limited to 4 percent (refer to table 4-2).

Additional guidelines related to cross slope are:

1. Although not widely encouraged, inside lanes can be sloped toward the median if conditions warrant.

2. Median areas should not be drained across travel lanes.

3. The number and length of flat pavement sections in cross slope transition areas should be minimized. Consideration should be given to increasing cross slopes in sag vertical curves, crest vertical curves, and in sections of flat longitudinal grades.

4. Shoulders should be sloped to drain away from the pavement, except with raised, narrow medians and superelevations.

### 4.2.4 Curb and Gutter

Curbs are normally used at the outside edge of pavements for low-speed, highway facilities, and in some instances adjacent to shoulders on moderate to high-speed facilities. They serve the following purposes:

- contain the surface runoff within the roadway and away from adjacent properties,
- prevent erosion on fill slopes,
- provide pavement delineation, and

**Table 4-2. Normal Pavement Cross Slopes.**

| SURFACE TYPE | RANGE IN RATE OF SURFACE SLOPE |
|---|---|
| High-Type Surface | |
| 2-lanes | 0.015 - 0.020 |
| 3 or more lanes, each direction | 0.015 minimum; increase 0.005 to 0.010 per lane; 0.040 maximum |
| Intermediate Surface | 0.015 - 0.030 |
| Low-Type Surface | 0.020 - 0.060 |
| Shoulders | |
| Bituminous or Concrete | 0.020 - 0.060 |
| With Curbs | ≥ 0.040 |

- enable the orderly development of property adjacent to the roadway.

Gutters formed in combination with curbs are available in 0.3 through 1.0 meter (12 through 39 inch) widths. Gutter cross slopes may be the same as that of the pavement or may be designed with a steeper cross slope, usually 80 mm per meter (1 inch per foot) steeper than the shoulder or parking lane (if used). AASHTO geometric guidelines state that an 8% slope is a common maximum cross slope.

A curb and gutter combination forms a triangular channel that can convey runoff equal to or less than the design flow without interruption of the traffic. When a design flow occurs, there is a **spread** or widening of the conveyed water surface. The water spreads to include not only the gutter width, but also parking lanes or shoulders, and portions of the travelled surface. **Spread** is what concerns the hydraulic engineer in curb and gutter flow. The distance of the spread, T, is measured perpendicular to the curb face to the extent of the water on the roadway and is shown in figure 4-1. Limiting this width becomes a very important design criterion and will be discussed in detail in section 4.3.

Where practical, runoff from cut slopes and other areas draining toward the roadway should be intercepted before it reaches the highway. By doing so, the deposition of sediment and other debris on the roadway as well as the amount of water which must be carried in the gutter section will be minimized. Where curbs are not needed for traffic control, shallow ditch sections at the edge of the roadway pavement or shoulder offer advantages over curbed sections by providing less of a hazard to traffic than a near-vertical curb and by providing hydraulic capacity that is not dependent on spread on the pavement. These ditch sections are particularly appropriate where curbs have historically been used to prevent water from eroding fill slopes.

### 4.2.5 Roadside and Median Channels

Roadside channels are commonly used with uncurbed roadway sections to convey runoff from the highway pavement and from areas which drain toward the highway. Due to right-of-way limitations, roadside channels cannot be used on most urban arterials. They can be used in cut sections, depressed sections, and other locations where sufficient right-of-way is available and driveways or intersections are infrequent.

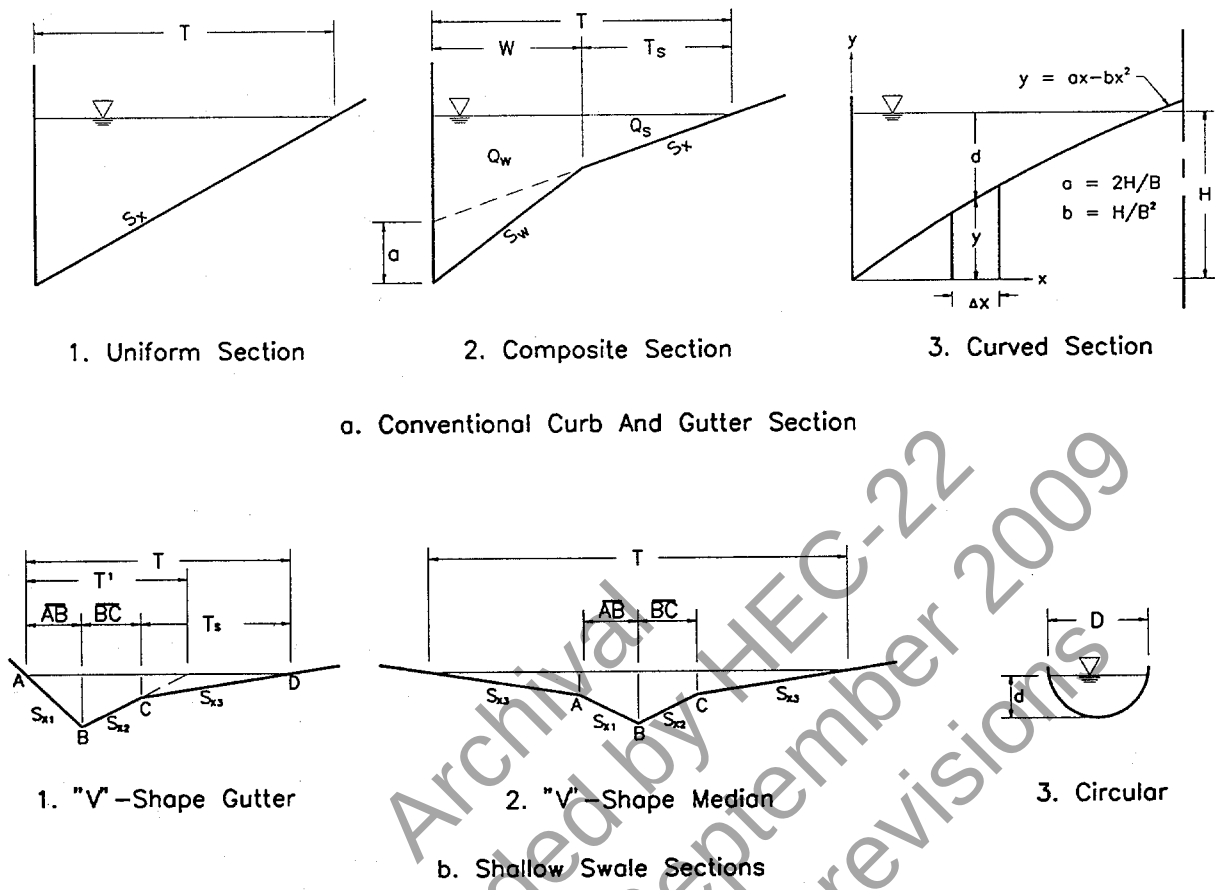


**Figure 4-1. Typical gutter sections.**

To prevent drainage from the median areas from running across the travel lanes, slope median areas and inside shoulders to a center swale. This design is particularly important for high speed facilities and for facilities with more than two lanes of traffic in each direction.

### 4.2.6 Bridge Decks

Bridge deck drainage is similar to that of curbed roadway sections. Effective bridge deck drainage is important for the following reasons:

- deck structural and reinforcing steel is susceptible to corrosion from deicing salts,
- moisture on bridge decks freezes before surface roadways, and
- hydroplaning often occurs at shallower depths on bridges due to the reduced surface texture of concrete bridge decks.

Bridge deck drainage is often less efficient than roadway sections because cross slopes are flatter, parapets collect large amounts of debris, and drainage inlets or typical bridge scuppers are less hydraulically efficient and more easily clogged by debris. Because of the difficulties in providing for and maintaining adequate deck drainage systems, gutter flow from roadways should be intercepted before it reaches a bridge. For similar reasons, zero gradients and sag vertical curves should be avoided on

bridges. Additionally, runoff from bridge decks should be collected immediately after it flows onto the subsequent roadway section where larger grates and inlet structures can be used.

A detailed coverage of bridge deck drainage systems is included in reference 23.

### 4.2.7 Median Barriers

Slope the shoulder areas adjacent to median barriers to the center to prevent drainage from running across the traveled pavement. Where median barriers are used, and particularly on horizontal curves with associated superelevations, it is necessary to provide inlets or slotted drains to collect the water accumulated against the barrier. Additionally, some highway department agencies use a piping system to convey water through the barrier.

### 4.2.8 Impact Attenuators

The location of impact attenuator systems should be reviewed to determine the need for drainage structures in these areas. With some impact attenuator systems it is necessary to have a clear or unobstructed opening as traffic approaches the point of impact to allow a vehicle to impact the system head on. If the impact attenuator is placed in an area where superelevation or other grade separation occurs, grate inlets and/or slotted drains may be needed to prevent water from running through the clear opening and crossing the highway lanes or ramp lanes. Curb, curb-type structures or swales cannot be used to direct water across this clear opening as vehicle vaulting could occur.



## 4.3 FLOW IN GUTTERS

A pavement gutter is defined, for purposes of this circular, as a section of pavement adjacent to the roadway which conveys water during a storm runoff event. It may include a portion or all of a travel lane. Gutter sections can be categorized as conventional or shallow swale type as illustrated in figure 4-1. Conventional curb and gutter sections usually have a triangular shape with the curb forming the near-vertical leg of the triangle. Conventional gutters may have a straight cross slope (figure 4-1, a.1.), a composite cross slope where the gutter slope varies from the pavement cross slope (figure 4-1, a.2.), or a parabolic section (figure 4-1, a.3.). Shallow swale gutters typically have V-shaped or circular sections as illustrated in figure 4-1, b.1., b.2., and b.3., respectively, and are often used in paved median areas on roadways with inverted crowns.

### 4.3.1 Capacity Relationship

Gutter flow calculations are necessary to establish the spread of water on the shoulder, parking lane, or pavement section. A modification of the Manning equation can be used for computing flow in triangular channels. The modification is necessary because the hydraulic radius in the equation does not adequately describe the gutter cross section, particularly where the top width of the water surface may be more than 40 times the depth at the curb. To compute gutter flow, the Manning equation is integrated for an increment of width across the section [24]. The resulting equation is:

**Table 4-3. Manning's n for street and pavement gutters.**

| TYPE OF GUTTER OR PAVEMENT | MANNING'S n |
|---|---|
| Concrete gutter, troweled finish | 0.012 |
| Asphalt Pavement: | |
| Smooth texture | 0.013 |
| Rough texture | 0.016 |
| Concrete gutter-asphalt pavement: | |
| Smooth | 0.013 |
| Rough | 0.015 |
| Concrete pavement: | |
| Float finish | 0.014 |
| Broom finish | 0.016 |
| For gutters with small slope, where sediment may accumulate, increase above values of "n" by | 0.02 |
| Reference: USDOT, FHWA, HDS-3 [36] | |



$$Q = \frac{K_c}{n} S_x^{1.67} S_L^{0.5} T^{2.67} \tag{4-2}$$

where: $K_c$ = 0.376 (0.56 in English units)
$n$ = Manning's coefficient (see table 4-3)
$Q$ = flow rate, $m^3/sec$ ($ft^3/sec$)
$T$ = width of flow (spread), m (ft)
$S_x$ = cross slope, m/m (ft/ft)
$S_L$ = longitudinal slope, m/m (ft/ft)

Equation 4-2 neglects the resistance of the curb face since this resistance is negligible.

Spread on the pavement and flow depth at the curb are often used as criteria for spacing pavement drainage inlets. Design chart 1 in appendix A is a nomograph for solving equation 4-2. The chart can be used for either criterion with the relationship:

$$d = T\ S_x \tag{4-3}$$

where: $d$ = depth of flow , m (ft)

Chart 1 can be used for direct solution of gutter flow where the Manning n value is 0.016. For other values of n, divide the value of Qn by n. Instructions for use and an example problem solution are provided on the chart.

### 4.3.2 Conventional Curb and Gutter Sections

Conventional gutters begin at the inside base of the curb and usually extend from the curb face toward the roadway centerline a distance of 0.3 to 1 meter. As illustrated in figure 4-1, gutters can have uniform, composite, or curved sections. Uniform gutter sections have a cross-slope which is equal to the cross-slope of the shoulder or travel lane adjacent to the gutter. Gutters having composite sections are depressed in relation to the adjacent pavement slope. That is, the paved gutter has a cross-slope which is steeper than that of the adjacent pavement. This concept is illustrated in example 4-1. Curved gutter sections are sometimes found along older city streets or highways with curved pavement sections. Procedures for computing the capacity of curb and gutter sections follows.

#### 4.3.2.1 Conventional Gutters of Uniform Cross Slope

The nomograph in chart 1 solves equation 4-2 for gutters having triangular cross sections. Example 4-1 illustrates its use for the analysis of conventional gutters with uniform cross slope.

***Example 4-1***

***Given:*** *Gutter section illustrated in figure 4-1 a.1.*

$S_L = 0.010$ m/m
$S_x = 0.020$ m/m
$n = 0.016$

***Find:*** *(1) Spread at a flow of 0.05 $m^3/s$ (1.8 $ft^3/s$)*
*(2) Gutter flow at a spread of 2.5 m (8.2 ft)*

***Solution (1):***

*Step 1. Compute spread, T, using equation 4-2 or from chart 1.*

$$T = [(Q\,n)/(K_m\,S_x^{1.67}\,S_L^{0.5})]^{0.375}$$
$$T = [(0.0008)/\{(0.376)(0.020)^{1.67}(0.010)^{0.5}\}]^{0.375}$$
$$T = 2.7 \text{ m } (8.9 \text{ ft})$$

***Solution (2):***

*Step 1. Using equation 4-2 or chart 1 with T = 2.5 m (8.2 ft) and the information given above, determine Qn.*

$$Qn = K_m\,S_x^{1.67}\,S_L^{0.5}\,T^{2.67}$$
$$Qn = (0.376)\,(0.020)^{1.67}\,(0.010)^{0.5}\,(2.5)^{2.67}$$
$$Qn = 0.00064 \text{ m}^3/\text{s } (0.023 \text{ ft}^3/\text{s})$$

*Step 2. Compute Q from Qn determined in Step 1.*

$$Q = Qn / n$$
$$Q = 0.00064 / .016$$
$$Q = 0.040 \text{ m}^3/\text{s } (1.4 \text{ ft}^3/\text{s})$$

*A computer solution is presented in appendix B for both part 1 and 2 of this example.*

### 4.3.2.2 Composite Gutter Sections

The design of composite gutter sections requires consideration of flow in the depressed segment of the gutter, $Q_w$. Equation 4-4, displayed graphically as chart 2, is provided for use with equations 4-5 and 4-6 below and chart 1 to determine the flow in a width of gutter in a composite cross section, W, less than the total spread, T. The procedure for analyzing composite gutter sections is demonstrated in example 4-2.

$$E_o = 1 \Big/ \left\{ 1 + \frac{S_w / S_x}{\left[ 1 + \dfrac{S_w / S_x}{\dfrac{T}{W} - 1} \right]^{2.67} - 1} \right\} \tag{4-4}$$

$$Q_w = Q - Q_s \tag{4-5}$$

$$Q = \frac{Q_s}{(1 - E_o)} \tag{4-6}$$

where:
- $Q_w$ = flow rate in the depressed section of the gutter, $m^3/s$ ($ft^3/s$)
- $Q$ = gutter flow rate, $m^3/s$ ($ft^3/s$)
- $Q_s$ = flow capacity of the gutter section above the depressed section, $m^3/s$ ($ft^3/s$)
- $E_o$ = ratio of flow in a chosen width (usually the width of a grate) to total gutter flow ($Q_w/Q$)
- $S_w$ = $S_x + a/W$ (see figure 4-1 a.2)

Figure 4-2 illustrates a design chart for a composite gutter with a 0.60 m (2 foot) wide gutter section with a 50 mm depression at the curb that begins at the projection of the uniform cross slope at the curb face. A series of charts similar to figure 4-2 for "typical" gutter configurations could be developed. The procedure for developing charts for depressed gutter sections is included as appendix C.

***Example 4-2***

***Given:*** *Gutter section illustrated in figure 4-1 a.2 with*

*$W$ = 0.6 m (2 ft)*
*$S_L$ = 0.01*
*$S_x$ = 0.020*
*$n$ = 0.016*
*Gutter depression, $a$ = 50 mm (2 in)*

***Find:*** *(1) Gutter flow at a spread, T, of 2.5 m (8.2 ft)*
*(2) Spread at a flow of 0.12 $m^3/s$ (4.2 $ft^3/s$)*

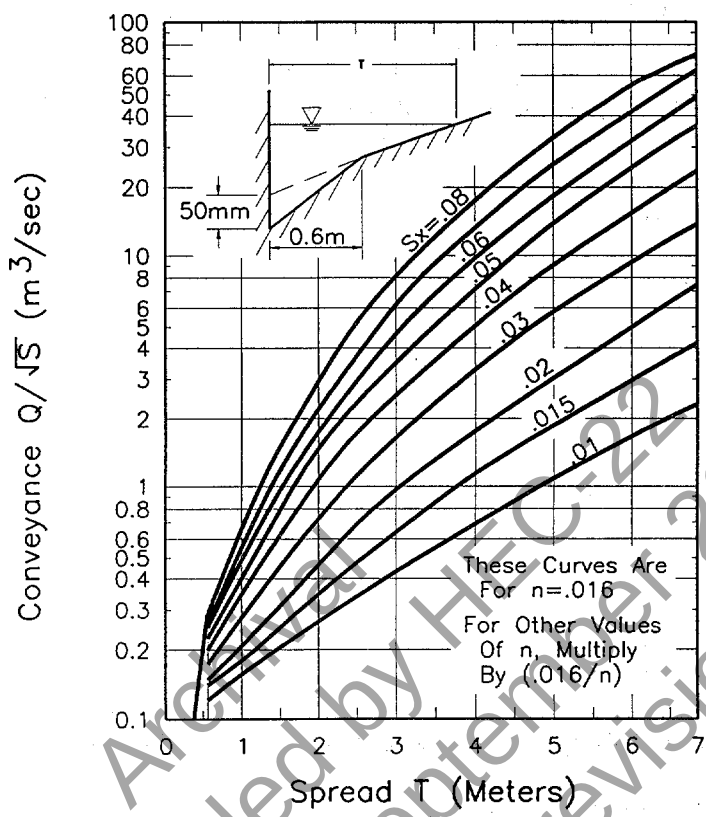


**Figure 4-2. Conveyance - Spread curves for a composite gutter section.**



***Solution (1):***

*Step 1. Compute the cross slope of the depressed gutter, $S_w$, and the width of spread from the junction of the gutter and the road to the limit of the spread, $T_s$.*

$S_w = a / W + S_x$

$S_w = [(50)/(1000)]/(0.6) + (0.020) = 0.103\ m/m$

$T_s = T - W = 2.5\ m - 0.6\ m$

$T_s = 1.9\ m\ (6.2\ ft)$

*Step 2. From equation 4-2 or from chart 1 (using $T_s$)*

$Q_s n = K_m S_x^{1.67} S_L^{0.5} T^{2.67}$

$Q_s n = (0.376)\ (0.02)^{1.67}\ (0.01)^{0.5}\ (1.9)^{2.67}$

$Q_s n = 0.00031\ m^3/s\ (0.011\ ft^3/s)$, and

$Q_s = Q_s / n = 0.00031 / 0.016$

$Q_s = 0.019\ m^3/sec\ (0.75\ ft^3/s)$

*Step 3. Determine the gutter flow, Q, using equation 4-4 or chart 2*

$T / W = 2.5 / 0.6 = 4.17$
$S_w / S_x = 0.103 / 0.020 = 5.15$
$E_o = 1/ \{1 + [(S_w/S_x)/(1+ (S_w/S_x)/(T/W-1))^{2.67}-1]\}$
$E_o = 1/ \{1 + [5.15/(1 + (5.15)/(4.17-1))^{2.67}-1]\}$
$E_o = 0.70$

*Or from chart 2,* $E_o = Q_w / Q = 0.70$

$Q = Q_w / E_o = Q_s / (1 - E_o)$
$Q = 0.019 / (1 - 0.70)$
$Q = 0.06\ m^3/sec\ (2.3\ ft^3/s)$

***Solution (2):***

*Step 1. Try* $Q_s = 0.04\ m^3/sec\ (1.4\ ft^3/s)$

*Step 2. Compute* $Q_w$

$Q_w = Q - Q_s = 0.12 - 0.04$
$Q_w = 0.08\ m^3/sec\ (2.8\ ft^3/s)$

*Step 3. Using equation 4-4 or from chart 2, determine W/T ratio*

$E_o = Q_w / Q = 0.08 / 0.12 = 0.67$
$S_w/S_x = 0.103 / 0.020 = 5.15$

$W/T = 0.23$ *from chart 2*

*Step 4. Compute spread based on the assumed* $Q_s$

$T = W / (W/T) = 0.6 / 0.23$
$T = 2.6\ m\ (8.6\ ft)$

*Step 5. Compute* $T_s$ *based on assumed* $Q_s$

$T_s = T - W = 2.6 - 0.6 = 2.0\ m\ (6.6\ ft)$

*Step 6. Use equation 4-2 or chart 1 to determine* $Q_s$ *for computed* $T_s$

$Q_s n = K\, S_x^{1.67}\, S_L^{0.5}\, T^{2.67}$
$Q_s n = (0.376)\ (0.02)^{1.67}\ (0.01)^{0.5}\ (2.0)^{2.67}$
$Q_s n = 0.00035\ m^3/s\ (0.0123\ ft^3/s)$
$Q_s = Q_s n / n = 0.00035 / 0.016$
$Q_s = 0.022\ m^3/s\ (0.77\ ft^3/s)$

*Step 7. Compare computed* $Q_s$ *with assumed* $Q_s$

$Q_s$ *assumed* $= 0.04 > 0.022 =$ $Q_s$ *computed*

*Step 8. Try a new assumed $Q_s$ and repeat Steps 2 through 7.*

*Assume $Q_s$ = 0.058 $m^3/s$ (2.0 $ft^3/s$)*
*$Q_w$ = 0.12 - 0.058 = 0.062 $m^3/s$ (2.2 $ft^3/s$)*
*$E_o = Q_w / Q$ = 0.062 / 0.12 = 0.52*
*$S_w / S_x$ = 5.15*
*W / T = 0.17*
*T = 0.60 / 0.17 = 3.5 m (11.5 ft)*
*$T_s$ = 3.5 - 0.6 = 2.9 m (9.5 ft)*
*$Q_s n$ = 0.00094 $m^3/s$ (.032 $ft^3/s$)*
*$Q_s$ = .00094 / 0.016 = 0.059 $m^3/s$ (2.1 $ft^3/s$)*

*$Q_s$ assumed = 0.058 $m^3/s$ equal to 0.059 $m^3/s$ = $Q_s$ computed*

*A computer solution is presented in appendix B for both parts 1 and 2 of this example.*

4.3.2.3 Conventional Gutters with Curved Sections

Where the pavement cross section is curved, gutter capacity varies with the configuration of the pavement. For this reason, discharge-spread or discharge-depth-at-the-curb relationships developed for one pavement configuration are not applicable to another section with a different crown height or half-width.

Procedures for developing conveyance curves for parabolic pavement sections are included in appendix C.

### 4.3.3 Shallow Swale Sections

Where curbs are not needed for traffic control, a small swale section of circular or V-shape may be used to convey runoff from the pavement. As an example, the control of pavement runoff on fills may be needed to protect the embankment from erosion. Small swale sections may have sufficient capacity to convey the flow to a location suitable for interception.

4.3.3.1 V-Sections

Chart 1 can be used to compute the flow in a shallow V-shaped section. When using chart 1 for V-shaped channels, the cross slope, $S_x$ is determined by the following equation:

$$S_x = \frac{S_{x1}\, S_{x2}}{(S_{x1} + S_{x2})} \tag{4-7}$$

Example 4-3 demonstrates the use of chart 1 to analyze a V-shaped shoulder gutter. Analysis of a V-shaped gutter resulting from a roadway with an inverted crown section is illustrated in example 4-4.

***Example 4-3***

***Given:*** *V-shaped roadside gutter (figure 4-1 b.1.) with*

$S_L = 0.01$
$n = 0.016$
$S_{x1} = 0.25$
$S_{x2} = 0.04$
$S_{x3} = 0.02$
Distance $\overline{BC} = 0.6$ m (2.0 ft)

***Find:*** *Spread at a flow of 0.05 $m^3/s$ (1.8 $ft^3/s$)*

***Solution:***

*Step 1. Calculate $S_x$*

$$S_x = S_{x1} S_{x2} / (S_{x1} + S_{x2}) = (0.25)(0.04) / (0.25 + 0.04)$$
$$S_x = 0.0345$$

*Step 2. Using equation 4-2 or chart 1*

$$T' = [(Q\ n)/(K\ S_x^{1.67}\ S_L^{0.5})]^{0.375}$$
$$T' = [(0.05)(0.016)/\{(0.376)(0.0345)^{1.67}(0.01)^{0.5}\}]^{0.375}$$
$$T' = 1.94 \text{ m } (6.4 \text{ ft})$$

*(T' is the hypothetical spread that is correct if it is contained within $S_{x1}$ and $S_{x2}$)*

*Step 3. To determine if T' is within $S_{x1}$ and $S_{x2}$, compute the depth at point B of just the deeper triangle knowing $\overline{BC}$ and $S_{x2}$. Then knowing the depth at B, the distance $\overline{AB}$ can be computed.*

$$d_B = \overline{BC}\ S_{x2}$$
$$= (0.6)(0.04)$$
$$= 0.024 \text{ m } (0.08 \text{ ft})$$

$$\overline{AB} = d_B / S_{x1}$$
$$= (0.024) / (0.25) = 0.096 \text{ m } (0.31 \text{ ft})$$

$$\overline{AC} = \overline{AB} + \overline{BC}$$
$$= 0.096 + 0.60$$
$$= 0.7 \text{ m } (2.3 \text{ ft})$$

*0.7 m < T' therefore, spread falls outside V-shaped gutter section.*

*Step 4. Assume a spread along $\overline{BD}$ equal to 3 m and develop a weighted slope for $S_{x2}$ and $S_{x3}$.*

*0.6 m at $S_{x2}$ (0.04) and 2.4 m at $S_{x3}$ (0.02)*

$$\frac{(0.6)\ (0.04)\ +\ (2.4)\ (0.02)}{3} = 0.024$$

*Use this slope along with $S_{x1}$, find $S_x$ using equation (4-7)*

$$S_x = \frac{S_{x1}\ S_{x2}}{(S_{x1}\ +\ S_{x2})}$$

$$= \frac{(0.25)\ (0.024)}{(0.25\ +\ 0.024)} = 0.0219$$

*Step 5. Using equation 4-2 or chart 1*

$T' = [(Q\ n)/(K\ S_x^{\ 1.67}\ S_L^{\ 0.5})]^{0.375}$
$T' = [(0.05)(0.016)/\{(0.376)(0.0219)^{1.67}(0.01)^{0.5}\}]^{0.375}$
$T' = 2.58$ *m (8.5 ft)*

*This (2.58 m) is lower than the assumed value of 3.0 m. Therefor, assume T = 2.6 m and begin at Step 4*

*Step 4. 0.6 m at $S_{x2}$ (0.04) and 2.0 m at $S_{x3}$ (0.02)*

$$\frac{(0.6)\ (0.04)\ +\ 2.0\ (0.02)}{(2.6)} = 0.0246$$

*Use this slope along with $S_{x1}$, find $S_x$ using equation 4-7*

$$S_x = \frac{(0.25)\ (0.0246)}{(0.25\ +\ 0.0246)} = 0.0224$$

*Step 5. Using equation 4-2 or chart 1*

$T' = [(Q\ n)/(K\ S_x^{\ 1.67}\ S_L^{\ 0.5})]^{0.375}$
$T' = [(0.05)(0.016)/\{(0.376)(0.0224)^{1.67}(0.01)^{0.5}\}]^{0.375}$
$T' = 2.55$ *m (8.37 ft) close to the assumed value of 2.6 m*

***Example 4-4***

***Given:*** *V-shaped gutter as illustrated in figure 4-1 b.2 with*

$\overline{AB}$ = 3 m (9.8 ft)
$\overline{BC}$ = 3 m (9.8 ft)
$S_L$ = 0.01
$n$ = 0.016
$S_{x1}$ = $S_{x2}$ = 0.04
$S_{x3}$ = 0.02

***Find:*** *(1) Spread at a flow of 0.05 $m^3/s$ (1.8 $ft^3/s$)*
*(2) Flow at a spread of 3 m (9.8 ft)*

***Solution (1):***

*Step 1. Compute Sx*

$S_x = (S_{x1}\ S_{x2}) / (S_{x1} + S_{x2})$
$S_x = (0.04)\ (0.04) / (0.04 + 0.04)$
$S_x = 0.02$

*Step 2. From equation 4-2 or chart 1*

$T = [(Q\ n)/(K\ S_x^{1.67}\ S_L^{0.5})]^{0.375}$
$T = [(0.05)(0.016)/\{(0.376)\ (0.02)^{1.67}\ (0.01)^{0.5}\}]^{0.375}$
$T = 2.7\ m\ (9.0\ ft)$

*This is within $S_{x1}$ and $S_{x2}$, therefore, OK.*

***Solution (2):***

*Step 1. Compute $S_x$*

*From Part 1, Step 1 above, $S_x = 0.02$*

*Step 2. From equation 4-2 or chart 1*

$Q = K\ S_x^{1.67}\ S_L^{0.5}\ T^{2.67} / n$
$Q = (0.376)\ (0.02)^{1.67}\ (0.01)^{0.5}\ (3)^{2.67} / (0.016)$
$Q = 0.064\ m^3/s\ (2.3\ ft^3/s)$

*A computer solution is presented in appendix B for both parts 1 and 2 of this example.*



4.3.3.2 Circular Sections

Flow in shallow circular gutter sections can be represented by the relationship:

$$\frac{d}{D} = K_C \left[\frac{Q\ n}{D^{2.67}\ S_L^{0.5}}\right]^{0.488} \tag{4-8}$$

where: d = depth of flow in circular gutter, m (ft)
D = diameter of circular gutter, m (ft)
$K_C$ = 1.179 (0.972 in English units)

which is displayed on chart 3. The width of circular gutter section $T_w$ is represented by the chord of the arc which can be computed using equation 4-9.

$$T_w = 2\ (r^2 - (r - d)^2)^{0.5} \tag{4-9}$$

where: $T_w$ = width of circular gutter section, m (ft)
r = radius of flow in circular gutter, m (ft)

Example 4-5 illustrates the use of chart 3.

***Example 4-5***

***Given:*** *A circular gutter swale as illustrated in figure 4-1 b (3) with a 1.5 meter (4.9 ft) diameter and*

$S_L = 0.01$
$n = 0.016$
$Q = 0.5\ m^3/s\ (17.6\ ft^3/s)$

***Find:*** *Flow depth and topwidth*

***Solution:***

*Step 1. Determine the value of*

$$Q\,n\,/\,(D^{2.67}\,S_L^{0.5}) = (0.5)(0.016)/[(1.5)^{2.67}\,(0.01)^{0.5}] = 0.027$$

*Step 2. Using equation 4-8 or chart 3, determine d/D*

$$d/D = K_D\,[(Q\,n)/\,(D^{2.67}\,S_L^{0.5})]^{0.488}$$
$$d/D = (1.179)\,[0.027]^{0.488}$$
$$d/D = 0.20$$
$$d = D\,(d/D) = 1.5\,(0.20) = 0.30\ m\ (0.98\ ft)$$

*Step 3. Using equation 4-9, determine $T_w$*

$$T_w = 2\,[r^2 - (r - d)^2]^{1/2}$$
$$= 2\,[(0.75)^2 - (0.75 - 0.3)^2]^{1/2}$$
$$= 1.2\ m\ (3.9\ ft)$$

### 4.3.4 Flow in Sag Vertical Curves

As gutter flow approaches the low point in a sag vertical curve the flow can exceed the allowable design spread values as a result of the continually decreasing gutter slope. The spread in these areas should be checked to insure it remains within allowable limits. If the computed spread exceeds design values, additional inlets should be provided to reduce the flow as it approaches the low point. Sag vertical curves and measures for reducing spread are discussed further in section 4.4.

### 4.3.5 Relative Flow Capacities

Examples 4-1 and 4-2 illustrate the advantage of a composite gutter section. The capacity of the section with a depressed gutter in the examples is 70 percent greater than that of the section with a straight cross slope with all other parameters held constant.

Equation 4-2 can be used to examine the relative effects of changing the values of spread, cross slope, and longitudinal slope on the capacity of a section with a straight cross slope.

To examine the effects of cross slope on gutter capacity, equation 4-2 can be transformed as follows into a relationship between $S_x$ and Q as follows:

Let

$$K_1 = \frac{n}{K_m \, S_L^{0.5} \, T^{2.67}}$$

then

and

$$S_x^{1.67} = K_1 \, Q$$

$$\left(\frac{S_{x1}}{S_{x2}}\right)^{1.67} = \frac{K_1 \, Q_1}{K_1 \, Q_2} = \frac{Q_1}{Q_2} \tag{4-10}$$

Similar transformations can be performed to evaluate the effects of changing longitudinal slope and width of spread on gutter capacity resulting in equations 4-11 and 4-12 respectively.

$$\left(\frac{S_{L1}}{S_{L2}}\right)^{0.5} = \frac{Q_1}{Q_2} \tag{4-11}$$

$$\left(\frac{T_1}{T_2}\right)^{2.67} = \frac{Q_1}{Q_2} \tag{4-12}$$



Equations 4-10, 4-11, and 4-12 are illustrated in figure 4-3. As illustrated, the effects of spread on gutter capacity are greater than the effects of cross slope and longitudinal slope, as would be expected due to the larger exponent of the spread term. The magnitude of the effect is demonstrated when gutter capacity with a 3 meter (9.8 ft) spread is 18.8 times greater than with a 1 meter (3.3 ft) spread, and 3 times greater than a spread of 2 meters (6.6 ft).

The effects of cross slope are also relatively great as illustrated by a comparison of gutter capacities with different cross slopes. At a cross slope of 4 percent, a gutter has 10 times the capacity of a gutter of 1 percent cross slope. A gutter at 4 percent cross slope has 3.2 times the capacity of a gutter at 2 percent cross slope.

Little latitude is generally available to vary longitudinal slope in order to increase gutter capacity, but slope changes which change gutter capacity are frequent. Figure 4-3 shows that a change from S = 0.04 to 0.02 will reduce gutter capacity to 71 percent of the capacity at S = 0.04.

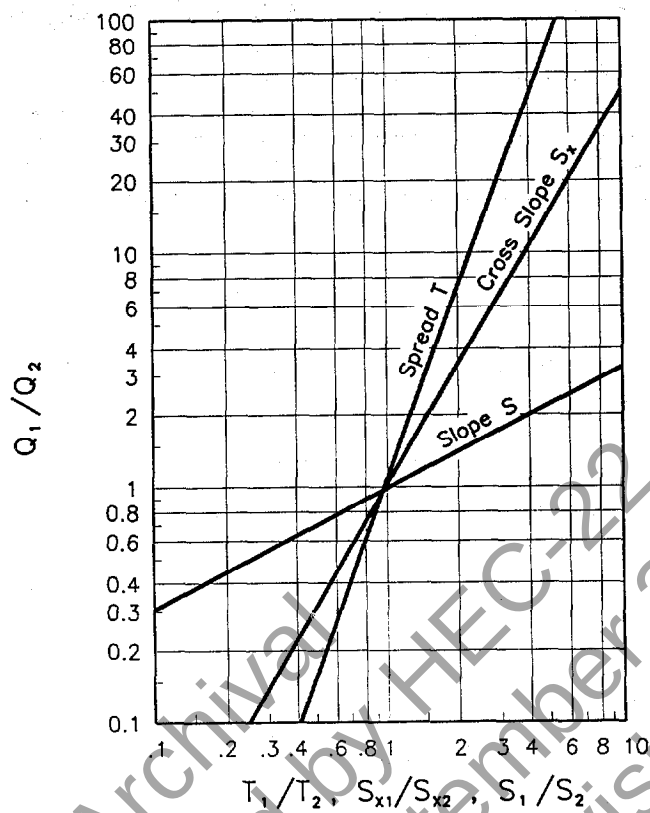


**Figure 4-3. Relative effects of spread, cross slope, and longitudinal slope on gutter capacity.**



### 4.3.6 Gutter Flow Time

The flow time in gutters is an important component of the time of concentration for the contributing drainage area to an inlet. To find the gutter flow component of the time of concentration, a method for estimating the average velocity in a reach of gutter is needed. The velocity in a gutter varies with the flow rate and the flow rate varies with the distance along the gutter, i.e., both the velocity and flow rate in a gutter are spatially varied. The time of flow can be estimated by use of an average velocity obtained by integration of the Manning equation for the gutter section with respect to time. The derivation of such a relationship for triangular channels is presented in appendix C.

Table 4-4 and chart 4 can be used to determine the average velocity in triangular gutter sections. In table 4-4, $T_1$ and $T_2$ are the spread at the upstream and downstream ends of the gutter section respectively. $T_a$ is the spread at the average velocity. Chart 4 is a nomograph to solve equation 4-13 for the velocity in a triangular channel with known cross slope, gutter slope, and spread.

$$V = \frac{K_C}{n} S_L^{0.5} S_x^{0.67} T^{0.67} \qquad (4\text{-}13)$$

where: $K_C$ = 0.752 (1.11 in English units)
$V$ = velocity in the triangular channel, m/s (ft/s)

**Table 4-4. Spread at average velocity in a reach of triangular gutter.**

| $T_1/T_2$ | 0 | 0.1 | 0.2 | 0.3 | 0.4 | 0.5 | 0.6 | 0.7 | 0.8 |
|---|---|---|---|---|---|---|---|---|---|
| $T_a/T_2$ | 0.65 | 0.66 | 0.68 | 0.70 | 0.74 | 0.77 | 0.82 | 0.86 | 0.90 |

Example 4-6 illustrates the use of table 4-4 and chart 4 to determine the average gutter velocity.

***Example 4-6***

***Given:*** *A triangular gutter section with the following characteristics:*

$T_1$ = 1 m (3.3 ft)
$T_2$ = 3 m (9.8 ft)
$S_L$ = 0.03
$S_x$ = 0.02
$n$ = 0.016
*Inlet Spacing anticipated to be 100 meters (330 ft).*

***Find:*** *Time of flow in gutter*

***Solution:***

*Step 1. Compute the upstream to downstream spread ratio.*

$T_1 / T_2 = 1 / 3 = 0.33$

*Step 2. Determine the spread at average velocity interpolating between values in table 4-4.*

$(0.30 - 0.33) / (0.3 - 0.4) = X / (0.74-0.70)$
$X = 0.01$
$T_a / T_2 = 0.70 + 0.01 = 0.71$
$T_a = (0.71)(3) = 2.13$ m (7.0 ft)

*Step 3. Using equation 4-13 or chart 4, determine the average velocity*

$V_a = 0.752/n\ S_L^{0.5}\ S_x^{0.67}\ T^{0.67}$
$V_a = (0.752)/(0.016)\ (0.03)^{0.5}\ (0.02)^{0.67}\ (2.13)^{0.67}$
$V_a = 0.98$ m/s (3.2 ft/s)

*Step 4. Compute the travel time in the gutter.*

$t = (100) / (0.98) / 60 = 1.7$ minutes

## 4.4 DRAINAGE INLET DESIGN

The hydraulic capacity of a storm drain inlet depends upon its geometry as well as the characteristics of the gutter flow. Inlet capacity governs both the rate of water removal from the gutter and the amount of water that can enter the storm drainage system. Inadequate inlet capacity or poor inlet location may cause flooding on the roadway resulting in a hazard to the traveling public.

### 4.4.1 Inlet Types

Storm drain inlets are used to collect runoff and discharge it to an underground storm drainage system. Inlets are typically located in gutter sections, paved medians, and roadside and median ditches. Inlets used for the drainage of highway surfaces can be divided into the following four classes:

1. grate inlets,
2. curb-opening inlets,
3. slotted inlets, and
4. combination inlets.

Grate inlets consist of an opening in the gutter or ditch covered by a grate. Curb-opening inlets are vertical openings in the curb covered by a top slab. Slotted inlets consist of a pipe cut along the longitudinal axis with bars perpendicular to the opening to maintain the slotted opening. Combination inlets consist of both a curb-opening inlet and a grate inlet placed in a side-by-side configuration, but the curb opening may be located in part upstream of the grate. Figure 4-4 illustrates each class of inlets. Slotted drains may also be used with grates and each type of inlet may be installed with or without a depression of the gutter.



### 4.4.2 Characteristics and Uses of Inlets

**Grate inlets**, as a class, perform satisfactorily over a wide range of gutter grades. Grate inlets generally lose capacity with increase in grade, but to a lesser degree than curb opening inlets. The principal advantage of grate inlets is that they are installed along the roadway where the water is flowing. Their principal disadvantage is that they may be clogged by floating trash or debris. For safety reasons, preference should be given to grate inlets where out-of-control vehicles might be involved. Additionally, where bicycle traffic occurs, grates should be bicycle safe.

**Curb-opening** inlets are most effective on flatter slopes, in sags, and with flows which typically carry significant amounts of floating debris. The interception capacity of curb-opening inlets decreases as the gutter grade steepens. Consequently, the use of curb-opening inlets is recommended in sags and on grades less than 3%. Of course, they are bicycle safe as well.

**Combination inlets** provide the advantages of both curb opening and grate inlets. This combination results in a high capacity inlet which offers the advantages of both grate and curb-opening inlets. When the curb opening precedes the grate in a "Sweeper" configuration, the curb-opening inlet acts as a trash interceptor during the initial phases of a storm. Used in a sag configuration, the sweeper inlet can have a curb opening on both sides of the grate.

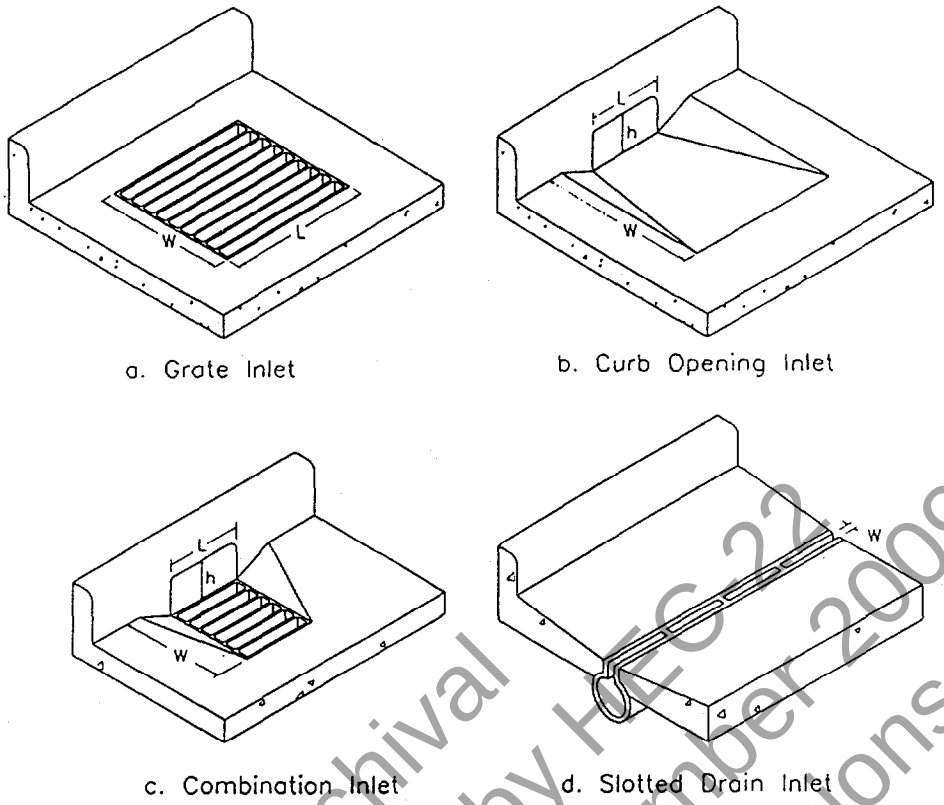


**Figure 4-4. Classes of storm drain inlets.**



**Slotted inlets** can be used in areas where it is desirable to intercept sheet flow before it crosses onto a section of roadway. Their principal advantage is their ability to intercept flow over a wide section. However, slotted inlets are very susceptible to clogging from sediments and debris, and are not recommended for use in environments where significant sediment or debris loads may be present. Slotted inlets on a longitudinal grade do have the same hydraulic capacity as curb openings when debris is not a factor.

### 4.4.3 Inlet Capacity

Inlet interception capacity has been investigated by several agencies and manufacturers of grates. Hydraulic tests on grate inlets and slotted inlets included in this document were conducted by the Bureau of Reclamation for the Federal Highway Administration. Four of the grates selected for testing were rated highest in bicycle safety tests, three have designs and bar spacing similar to those proven bicycle-safe, and a parallel bar grate was used as a standard with which to compare the performance of others.

References 25, 26, 27, 28, and 30 are reports resulting from this grate inlet research study. Figures 4-6, through 4-10 show the inlet grates for which design procedures were developed. For ease in identification, the following terms have been adopted:

P-50 — Parallel bar grate with bar spacing 48 mm (1-7/8 in) on center (figure 4-5).

P-50x100 — Parallel bar grate with bar spacing 48 mm (1-7/8 in) on center and 10 mm (3/8 in) diameter lateral rods spaced at 102 mm (4 in) on center (figure 4-5).

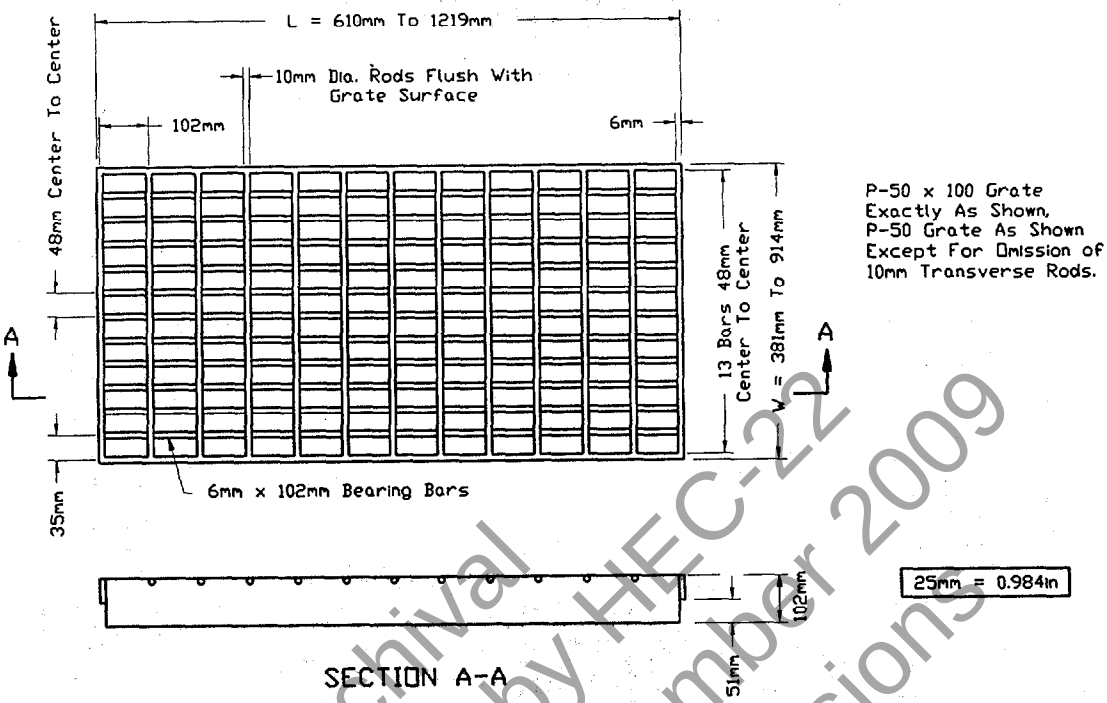


**Figure 4-5. P-50 and P-50x100 grates**



| | |
|---|---|
| P-30 | Parallel bar grate with 29 mm (1-1/8 in) on center bar spacing (figure 4-6). |
| Curved Vane | Curved vane grate with 83 mm (3-1/4 in) longitudinal bar and 108 mm (4-1/4 in) transverse bar spacing on center (figure 4-7). |
| 45°- 60 Tilt Bar | 45° tilt-bar grate with 57 mm (2-1/4 in) longitudinal bar and 102 mm (4 in) transverse bar spacing on center (figure 4-8). |
| 45°- 85 Tilt Bar | 45° tilt-bar grate with 83 mm (3-1/4 in) longitudinal bar and 102 mm (4 in) transverse bar spacing on center (figure 4-8). |
| 30°- 85 Tilt Bar | 30° tilt-bar grate with 83 mm (3-1/4 in) longitudinal bar and 102 mm (4 in) transverse bar spacing on center (figure 4-9). |
| Reticuline | "Honeycomb" pattern of lateral bars and longitudinal bearing bars (figure 4-10). |

The interception capacity of curb-opening inlets has also been investigated by several agencies. Design procedures adopted for this Circular are largely derived from experimental work at Colorado State University for the Federal Highway Administration, as reported in reference 24 and from reference 29.

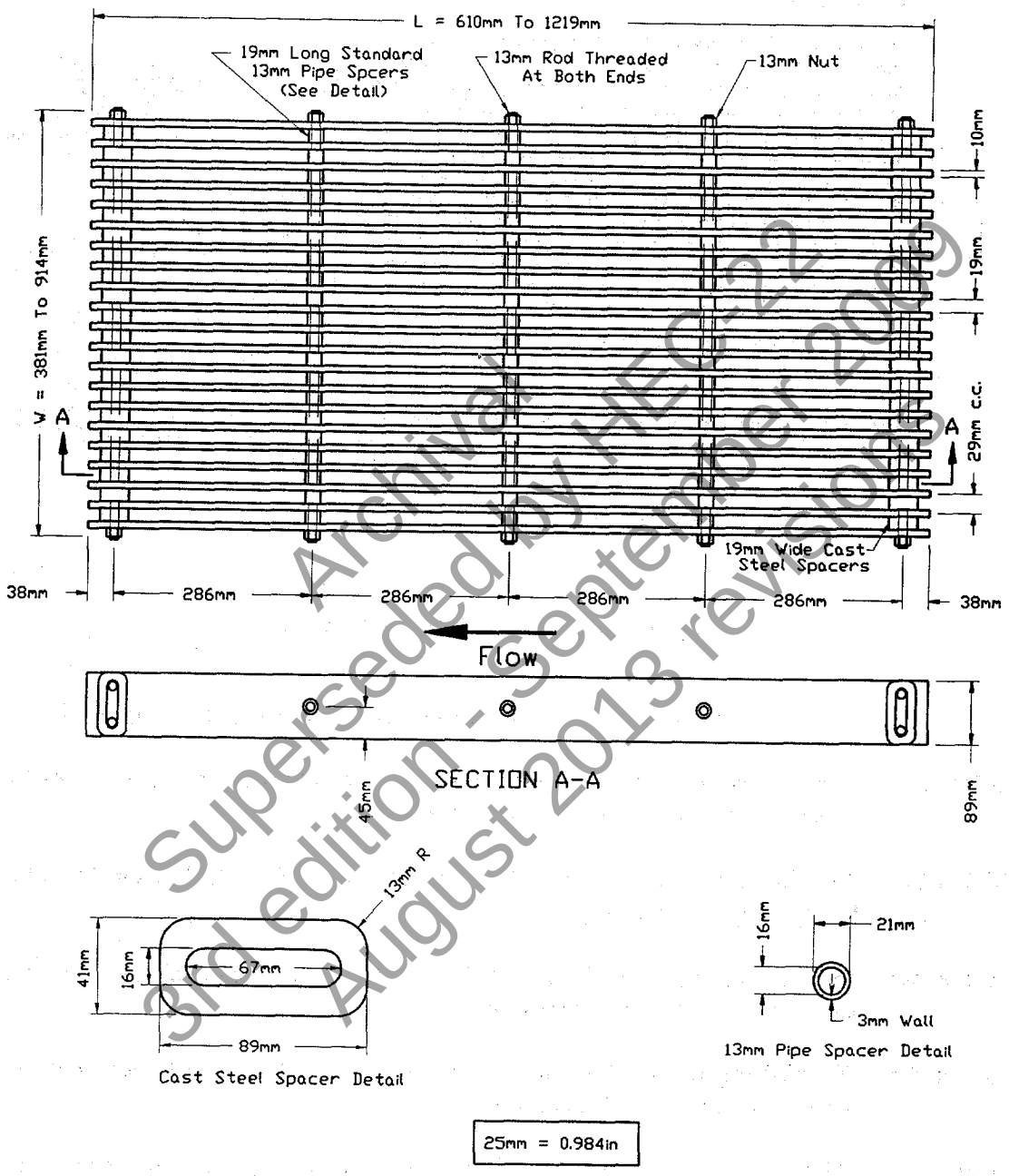




**Figure 4-6. P-30 grate.**

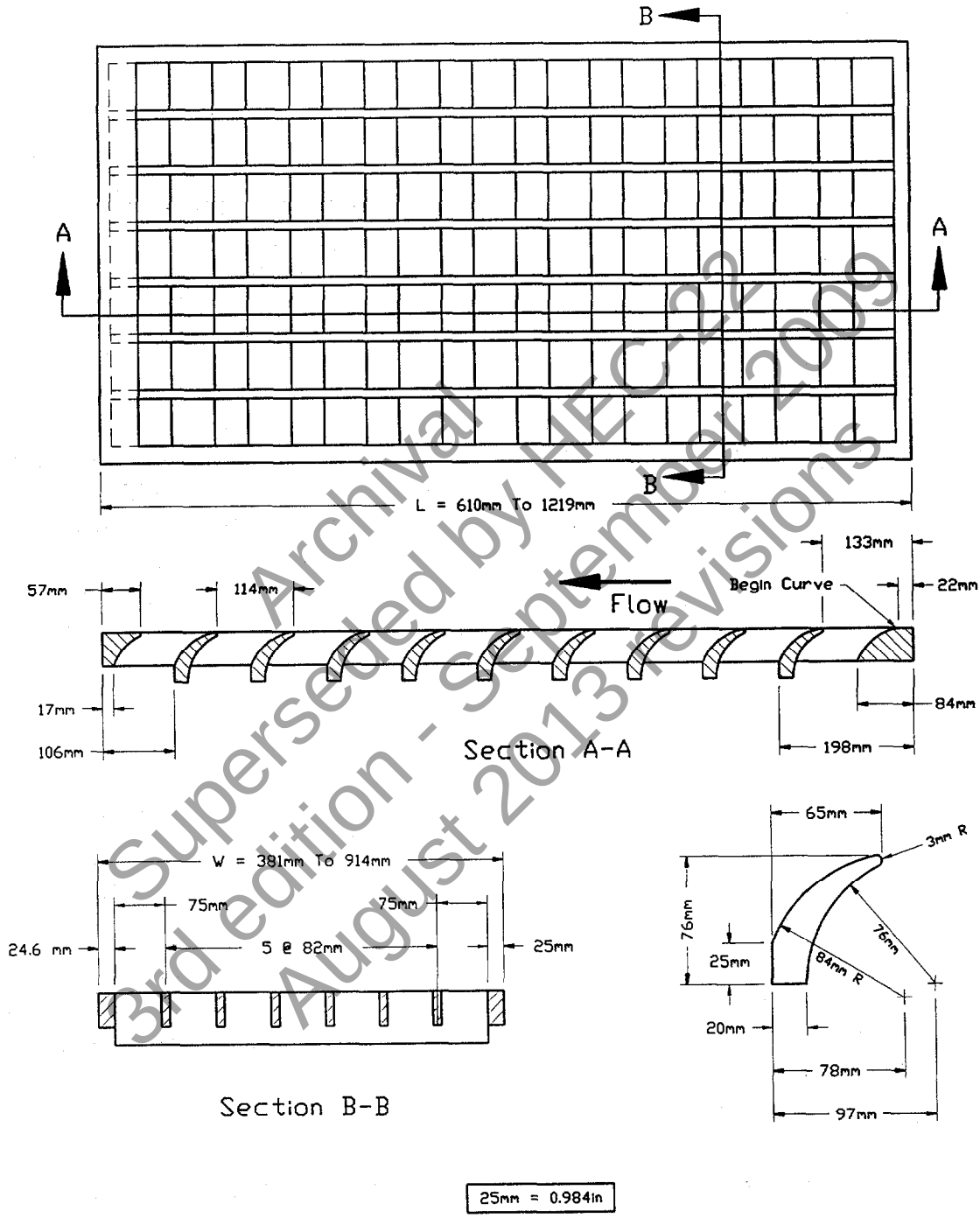




**Figure 4-7. Curved vane grate.**

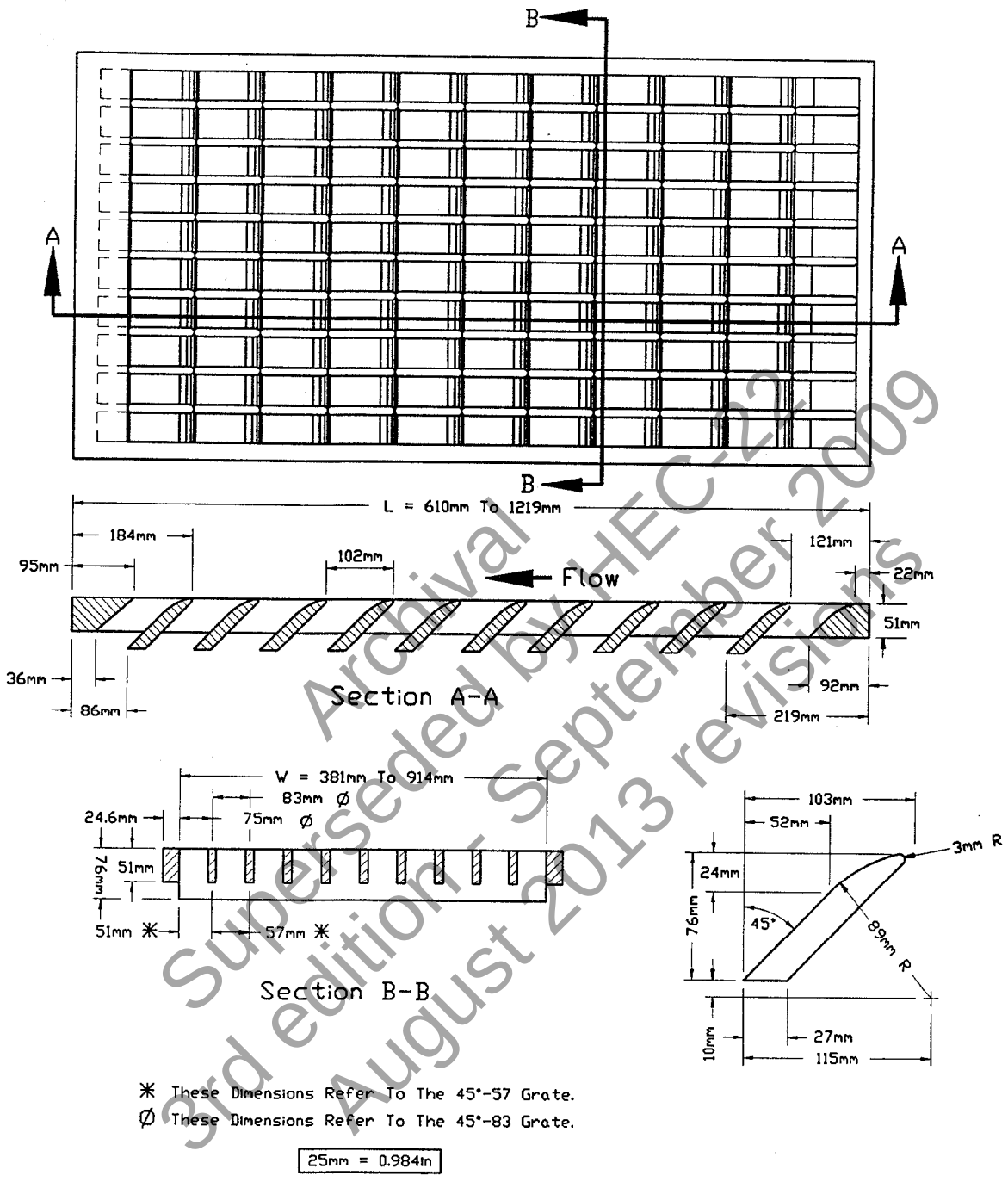




**Figure 4-8. 45°-60 and 45°-85 tilt-bar grates.**

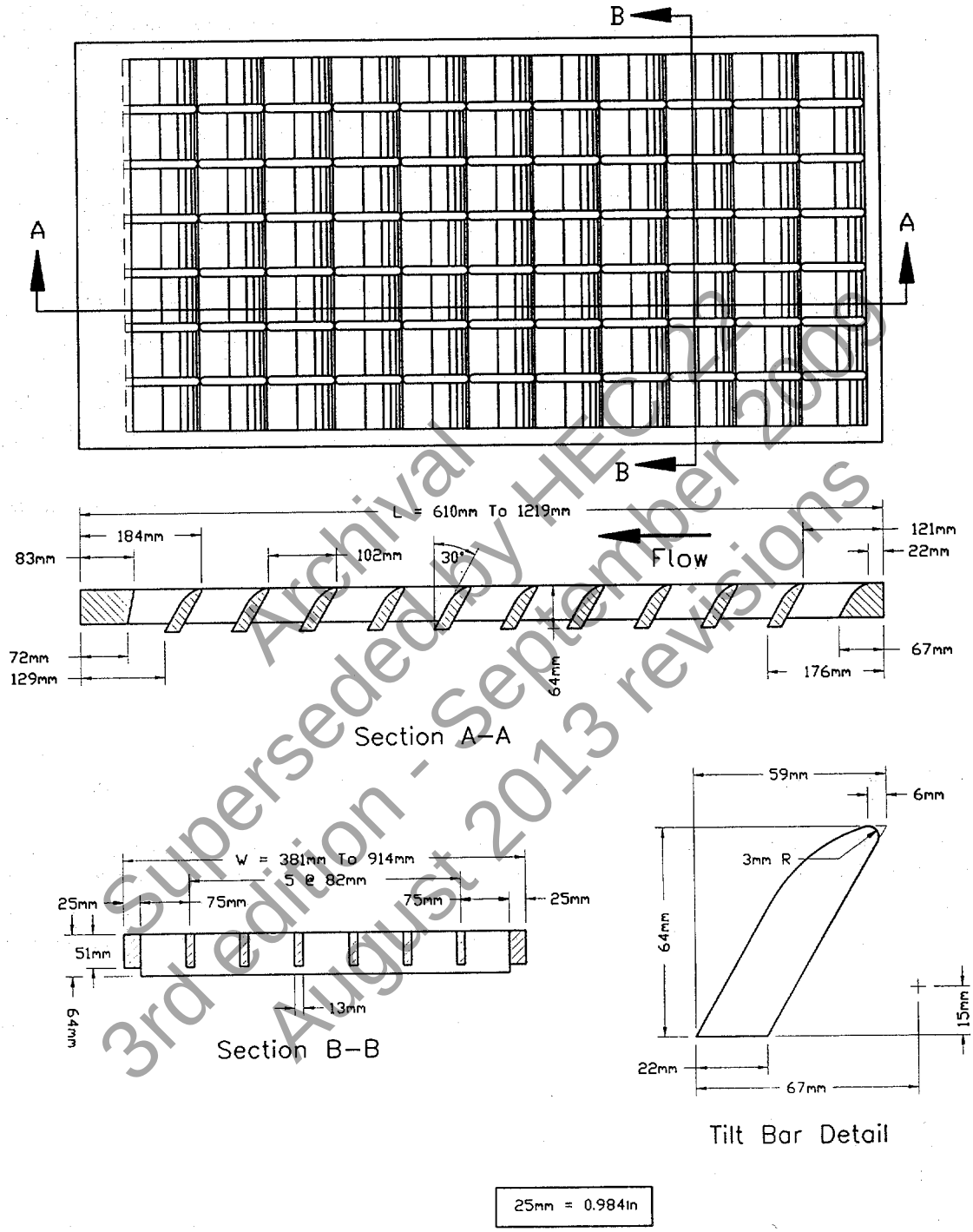




**Figure 4-9. 30°-85 tilt-bar grate.**

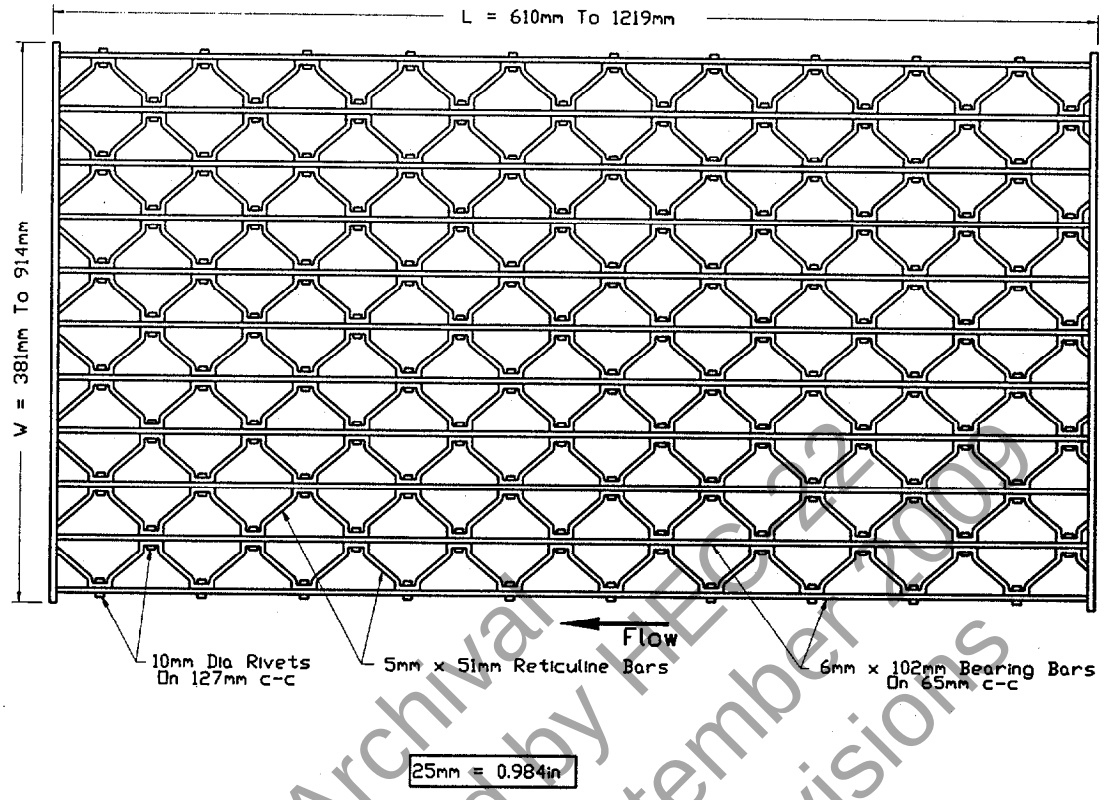


**Figure 4-10. Reticuline grate**



4.4.3.1 Factors Affecting Inlet Interception Capacity and Efficiency on Continuous Grades

Inlet interception capacity, $Q_i$, is the flow intercepted by an inlet under a given set of conditions. The efficiency of an inlet, E, is the percent of total flow that the inlet will intercept for those conditions. The efficiency of an inlet changes with changes in cross slope, longitudinal slope, total gutter flow, and, to a lesser extent, pavement roughness. In mathematical form, efficiency, E, is defined by the following equation:

$$E = \frac{Q_i}{Q} \tag{4-14}$$

where: E = inlet efficiency
Q = total gutter flow, $m^3/s$ ($ft^3/s$)
$Q_i$ = intercepted flow, $m^3/s$ ($ft^3/s$)

Flow that is not intercepted by an inlet is termed carryover or bypass and is defined as follows:

$$Q_b = Q - Q_i \tag{4-15}$$

where: $Q_b$ = bypass flow, $m^3/s$ ($ft^3/s$)

The interception capacity of all inlet configurations increases with increasing flow rates, and inlet efficiency generally decreases with increasing flow rates. Factors affecting gutter flow also affect inlet interception capacity. The depth of water next to the curb is the major factor in the interception capacity of both grate inlets and curb-opening inlets. The interception capacity of a grate inlet depends on the amount of water flowing over the grate, the size and configuration of the grate and the velocity of flow in the gutter. The efficiency of a grate is dependent on the same factors and total flow in the gutter.

Interception capacity of a curb-opening inlet is largely dependent on flow depth at the curb and curb opening length. Flow depth at the curb and consequently, curb-opening inlet interception capacity and efficiency, is increased by the use of a local gutter depression at the curb-opening or a continuously depressed gutter to increase the proportion of the total flow adjacent to the curb. Top slab supports placed flush with the curb line can substantially reduce the interception capacity of curb openings. Tests have shown that such supports reduce the effectiveness of openings downstream of the support by as much as 50 percent and, if debris is caught at the support, interception by the downstream portion of the opening may be reduced to near zero. If intermediate top slab supports are used, they should be recessed several inches from the curb line and rounded in shape.

Slotted inlets function in essentially the same manner as curb opening inlets, i.e., as weirs with flow entering from the side. Interception capacity is dependent on flow depth and inlet length. Efficiency is dependent on flow depth, inlet length and total gutter flow.

The interception capacity of an equal length combination inlet consisting of a grate placed alongside a curb opening on a grade does not differ materially from that of a grate only. Interception capacity and efficiency are dependent on the same factors which affect grate capacity and efficiency. A combination inlet consisting of a curb-opening inlet placed upstream of a grate inlet has a capacity equal to that of the curb-opening length upstream of the grate plus that of the grate, taking into account the reduced spread and depth of flow over the grate because of the interception by the curb opening. This inlet configuration has the added advantage of intercepting debris that might otherwise clog the grate and deflect water away from the inlet.



#### 4.4.3.2 Factors Affecting Inlet Interception Capacity in Sag Locations

Grate inlets in sag vertical curves operate as weirs for shallow ponding depths and as orifices at greater depths. Between weir and orifice flow depths, a transition from weir to orifice flow occurs. The perimeter and clear opening area of the grate and the depth of water at the curb affect inlet capacity. The capacity at a given depth can be severely affected if debris collects on the grate and reduces the effective perimeter or clear opening area.

Curb-opening inlets operate as weirs in sag vertical curve locations up to a ponding depth equal to the opening height. At depths above 1.4 times the opening height, the inlet operates as an orifice and between these depths, transition between weir and orifice flow occurs. The curb-opening height and length, and water depth at the curb affect inlet capacity. At a given flow rate, the effective water depth at the curb can be increased by the use of a continuously depressed gutter, by use of a locally depressed curb opening, or by use of an increased cross slope, thus decreasing the width of spread at the inlet.

Slotted inlets operate as weirs for depths below approximately 50 mm (2 in) and orifices in locations where the depth at the upstream edge of the slot is greater than about 120 mm (5 in). Transition flow exists between these depths. For orifice flow, an empirical equation derived from experimental data can be used to compute interception capacity. Interception capacity varies with flow depth, slope, width, and

length at a given spread. Slotted drains are not recommended in sag locations because they are susceptable to clogging from debris.

#### 4.4.3.3 Comparison of Interception Capacity of Inlets on Grade

In order to compare the interception capacity and efficiency of various inlets on grade, it is necessary to fix two variables that affect capacity and efficiency and investigate the effects of varying the other factor. Figure 4-11 shows a comparison of curb-opening inlets, grates, and slotted drain inlets with gutter flow fixed at 0.09 $m^3/s$ (3.2 $ft^3/s$), cross slope fixed at 3 percent, and longitudinal slope varied up to 10 percent. Conclusions drawn from an analysis of this figure are not necessarily transferable to other flow rates or cross slopes, but some inferences can be drawn that are applicable to other sets of conditions. Grate configurations used for interception capacity comparisons in this figure are described in section 4.4.3.

Figure 4-11 illustrates the effects of flow depth at the curb and curb-opening length on curb-opening inlet interception capacity and efficiency. All of the slotted inlets and curb-opening inlets shown in the figure lose interception capacity and efficiency as the longitudinal slope is increased because spread on the pavement and depth at the curb become smaller as velocity increases. It is accurate to conclude that curb-opening inlet interception capacity and efficiency would increase with steeper cross slopes. It is also accurate to conclude that interception capacity would increase and inlet efficiency would decrease with increased flow rates. Long curb-opening and slotted inlets compare favorably with grates in interception capacity and efficiency for conditions illustrated in figure 4-11.

The effect of depth at the curb is also illustrated by a comparison of the interception capacity and efficiency of depressed and undepressed curb-opening inlets. A 1.5 m (5 ft) depressed curb-opening inlet has about 67 percent more interception capacity than an undepressed inlet at 2 percent slope, 3 percent cross slope, and 0.085 $m^3/s$ (3 $ft^3/s$) gutter flow, and about 79 percent more interception capacity at an 8 percent slope.

At low velocities, all of the water flowing in the section of gutter occupied by the grate, called frontal flow, is intercepted by grate inlets. Only a small portion of the flow outside of the grate, termed side flow, is intercepted. When the longitudinal slope is increased, water begins to skip or splash over the grate at velocities dependent on the grate configuration. Figure 4-11 shows that interception capacity and efficiency are reduced at slopes steeper than the slope at which splash-over begins. Splash-over for the less efficient grates begins at the slope at which the interception capacity curve begins to deviate from the curve of the more efficient grates. All of the 0.6 m by 0.6 m (2 ft by 2 ft) grates have equal interception capacity and efficiency at a flow rate of 0.085 $m^3/s$ (3 $ft^3/s$), cross slope of 3 percent, and longitudinal slope of 2 percent. At slopes steeper than 2 percent, splash-over occurs on the reticuline grate and the interception capacity is reduced. At a slope of 6 percent, velocities are such that splash-over occurs on all except the curved vane and parallel bar grates. From these performance characteristics curves, it can be concluded that parallel-bar grates and the curved vane grate are relatively efficient at higher velocities and the reticuline grate is least efficient. At low velocities, the grates perform equally. However, some of the grates such as the reticuline grate are more susceptible to clogging by debris than the parallel bar grate.

The capacity and efficiency of grates increase with increased slope and velocity if splash-over does not occur. This is because frontal flow increases with increased velocity, and all frontal flow will be intercepted if splash-over does not occur.

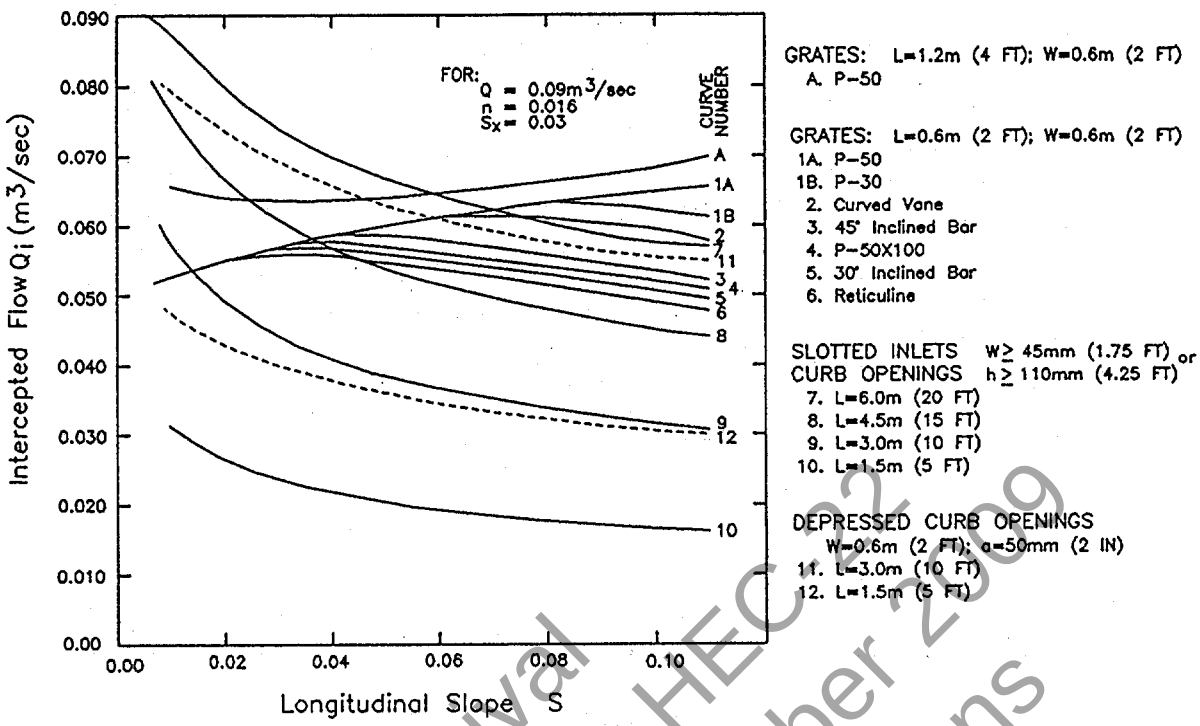


**Figure 4-11. Comparison of inlet interception capacity, slope variable.**



Figure 4-11 also illustrates that interception by longer grates would not be substantially greater than interception by 0.6 m by 0.6 m (2 ft by 2 ft) grates. In order to capture more of the flow, wider grates would be needed.

Figure 4-12 can be used for further study and comparisons of inlet interception capacity and efficiency. It shows, for example, that at a 6 percent slope, splash-over begins at about 0.02 $m^3/s$ (0.7 $ft^3/s$) on a reticuline grate. It also illustrates that the interception capacity of all inlets increases and inlet efficiency decreases with increased discharge.

This comparison of inlet interception capacity and efficiency neglects the effects of debris and clogging on the various inlets. All types of inlets, including curb-opening inlets, are subject to clogging, some being more susceptible than others. Attempts to simulate clogging tendencies in the laboratory have not been notably successful, except to demonstrate the importance of parallel bar spacing in debris handling efficiency. Grates with wider spacings of longitudinal bars pass debris more efficiently. Except for reticuline grates, grates with lateral bar spacing of less than 0.1 m (4 in) were not tested so conclusions cannot be drawn from tests concerning debris handling capabilities of many grates currently in use. Problems with clogging are largely local since the amount of debris varies significantly from one locality to another. Some localities must contend with only a small amount of debris while others experience extensive clogging of drainage inlets. Since partial clogging of inlets on grade rarely causes major problems, allowances should not be made for reduction in inlet interception capacity except where local experience indicates an allowance is advisable.

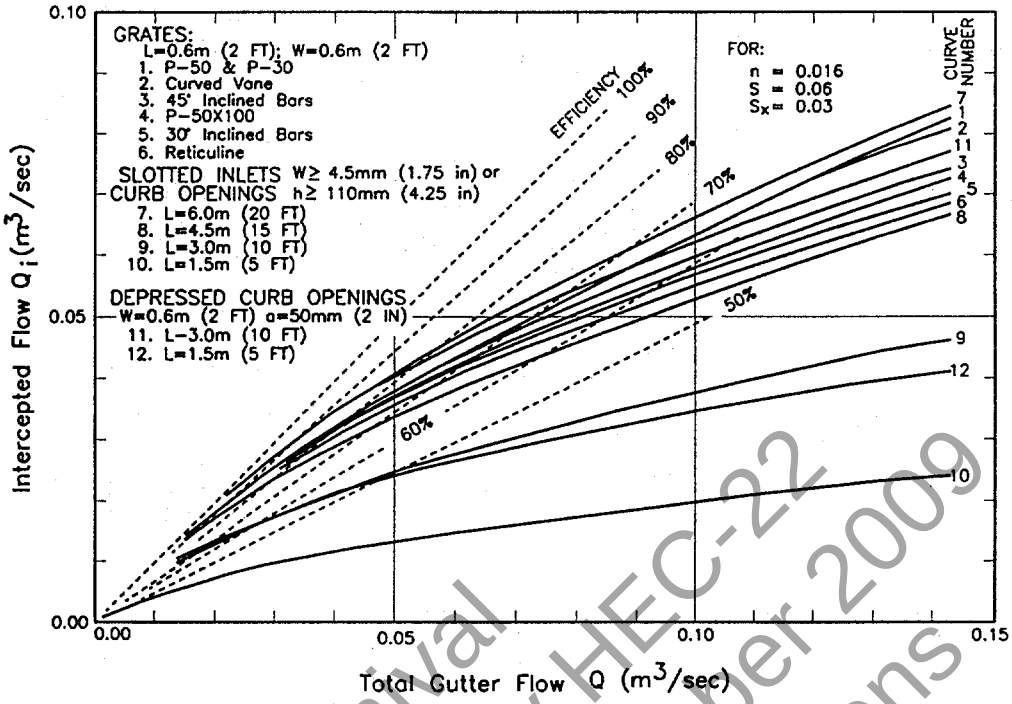


**Figure 4-12. Comparison of inlet interception capacity, flow rate variable**



### 4.4.4 Interception Capacity of Inlets on Grade

The interception capacity of inlets on grade is dependent on factors discussed in section 4.4.3.1. In this section, design charts for inlets on grade and procedures for using the charts are presented for the various inlet configurations. Remember that for locally depressed inlets, the quantity of flow reaching the inlet would be dependent on the upstream gutter section geometry and not the depressed section geometry.

Charts for grate inlet interception have been made and are applicable to all grate inlets tested for the Federal Highway Administration (references 25 through 28). The chart for frontal flow interception is based on test results which show that grates intercept all of the frontal flow until a velocity is reached at which water begins to splash over the grate. At velocities greater than "Splash-over" velocity, grate efficiency in intercepting frontal flow is diminished. Grates also intercept a portion of the flow along the length of the grate, or the side flow. A chart is provided to determine side-flow interception.

One set of charts is provided for slotted inlets and curb-opening inlets, because these inlets are both side-flow weirs. The equation developed for determining the length of inlet required for total interception fits the test data for both types of inlets.

A procedure for determining the interception capacity of combination inlets is also presented.

#### 4.4.4.1 Grate Inlets

Grates are effective highway pavement drainage inlets where clogging with debris is not a problem. Where clogging may be a problem, see table 4-5 where grates are ranked for susceptibility to clogging

**Table 4-5. Average debris handling efficiencies of grates tested.**

| RANK | GRATE | LONGITUDINAL SLOPE | |
|---|---|---|---|
| | | 0.005 | 0.040 |
| 1 | Curved Vane | 46 | 61 |
| 2 | 30°- 85 Tilt Bar | 44 | 55 |
| 3 | 45°- 85 Tilt Bar | 43 | 48 |
| 4 | P - 50 | 32 | 32 |
| 5 | P - 50x100 | 18 | 28 |
| 6 | 45°- 60 Tilt Bar | 16 | 23 |
| 7 | Reticuline | 12 | 16 |
| 8 | P - 30 | 9 | 20 |



based on laboratory tests using simulated "leaves." This table should be used for relative comparisons only.

When the velocity approaching the grate is less than the "splash-over velocity, the grate will intercept essentially all of the frontal flow. Conversely, when the gutter flow velocity exceeds the "splash-over" velocity for the grate, only part of the flow will be intercepted. A part of the flow along the side of the grate will be intercepted, dependent on the cross slope of the pavement, the length of the grate, and flow velocity.

The ratio of frontal flow to total gutter flow, $E_o$, for a uniform cross slope is expressed by equation 4-16:

$$E_o = \frac{Q_w}{Q} = 1 - \left(1 - \frac{W}{T}\right)^{2.67} \qquad (4\text{-}16)$$

where: $Q$ = total gutter flow, $m^3/s$ ($ft^3/s$)
$Q_w$ = flow in width W, $m^3/s$ ($ft^3/s$)
$W$ = width of depressed gutter or grate, m (ft)
$T$ = total spread of water, m (ft)

Example 4-2 and chart 2 provide solutions of $E_o$ for either uniform cross slopes or composite gutter sections.

The ratio of side flow, $Q_s$, to total gutter flow is:

$$\frac{Q_s}{Q} = 1 - \frac{Q_w}{Q} = 1 - E_o \tag{4-17}$$

The ratio of frontal flow intercepted to total frontal flow, $R_f$, is expressed by equation 4-18:

$$R_f = 1 - K_c (V - V_o) \tag{4-18}$$

where: $K_c$ = 0.295 (0.09 in English units)
$V$ = velocity of flow in the gutter, m/s
$V_o$ = gutter velocity where splash-over first occurs, m/s
(Note: $R_f$ can not exceed 1.0)

This ratio is equivalent to frontal flow interception efficiency. Chart 5 provides a solution for equation 4-18 which takes into account grate length, bar configuration, and gutter velocity at which splash-over occurs. The average gutter velocity (total gutter flow divided by the area of flow) is needed to use chart 5. This velocity can also be obtained from chart 4.

The ratio of side flow intercepted to total side flow, $R_s$, or side flow interception efficiency, is expressed by equation 4-19:

$$R_s = 1 / \left(1 + \frac{K_c V^{1.8}}{S_x L^{2.3}}\right) \tag{4-19}$$

where: $K_c$ = 0.0828 (0.15 in English units)

Chart 6 provides a solution to equation 4-19.

A deficiency in developing empirical equations and charts from experimental data is evident in chart 6. The fact that a grate will intercept all or almost all of the side flow where the velocity is low and the spread only slightly exceeds the grate width is not reflected in the chart. Error due to this deficiency is very small. In fact, where velocities are high, side flow interception may be neglected without significant error.

The efficiency, E, of a grate is expressed as provided in equation 4-20:

$$E = R_f E_o + R_s (1 - E_o) \tag{4-20}$$

The first term on the right side of equation 4-20 is the ratio of intercepted frontal flow to total gutter flow, and the second term is the ratio of intercepted side flow to total side flow. The second term is insignificant with high velocities and short grates.

The interception capacity of a grate inlet on grade is equal to the efficiency of the grate multiplied by the total gutter flow:

$$Q_i = E\,Q = Q\,[R_f E_o + R_s\,(1 - E_o)] \tag{4-21}$$

The use of charts 5 and 6 are illustrated in the following examples.

***Example 4-7***

***Given:*** *Given the gutter section from example 4-2 (illustrated in figure 4-1 a.2) with*

$T = 2.5$ m (8.2 ft)
$W = 0.6$ m (2.0 ft)
$S_L = 0.010$
$S_x = 0.02$
$n = 0.016$
Continuous Gutter depression, $a = 50$ mm (2 in)

***Find:*** *The interception capacity of a curved vane grate 0.6 m by 0.6 m (2 ft by 2 ft)*

***Solution:***

*From example 4-2,*

$S_w = 0.103$
$E_o = 0.70$
$Q = 0.06\ m^3/sec\ (2.3\ ft^3/sec)$

*Step 1. Compute the average gutter velocity*

$V = Q / A = 0.06 / A$

$A = 0.5\,T^2 S_x + 0.5\,D\,W$
$A = 0.5\,(2.5)^2\,(0.02) + 0.5(0.050)(0.6)$
$A = 0.08\ m^2\ (0.86\ ft^2)$

$V = 0.06 / 0.08 = 0.75$ m/s (2.5 ft/s)

*Step 2. Determine the frontal flow efficiency using chart 5.*

$R_f = 1.0$

*Step 3. Determine the side flow efficiency using equation 4-19 or chart 6.*

$R_s = 1/[1 + (0.0828\,V^{1.8}) / (S_x\,L^{2.3})]$
$R_s = 1/[1 + (0.0828)\,(0.75)^{1.8} / [(0.02)\,(0.6)^{2.3}]$
$R_s = 0.11$

*Step 4. Compute the interception capacity using equation 4-21.*

$$Q_i = Q[R_f E_o + R_s (1 - E_o)]$$
$$= (0.06)[(1.0)(0.70) + (0.11)(1 - 0.70)]$$

$$Q_i = 0.044\ m^3/s\ (1.6\ ft^3/s)$$

*A computer solution of this example is presented in appendix B.*

## *Example 4-8*

***Given:*** *Given the gutter section illustrated in figure 4-1 a.1 with*

$T = 3\ m\ (9.8\ ft)$
$S_L = 0.04$
$S_x = 0.025$
$n = 0.016$

*Bicycle traffic not permitted*

***Find:*** *The interception capacity of the following grates:*

a. *P-50; 0.6 m x 0.6 m (2.0 ft x 2.0 ft)*
b. *Reticuline; 0.6 m x 0.6 m (2.0 ft x 2.0 ft)*
c. *Grates in a. and b. with a length of 1.2 m (4.0 ft)*

***Solution:***

*Step 1. Using equation 4-2 or chart 1 determine Q.*

$$Q = K/n\ S_x^{1.67}\ S_L^{0.5}\ T^{2.67}$$
$$Q = (0.376)/(0.016)\ (0.025)^{1.67}\ (0.04)^{0.5}\ (3)^{2.67}$$
$$Q = 0.19\ m^3/sec\ (6.6\ ft^3/sec)$$

*Step 2. Determine $E_o$ from equation 4-4 or chart 2.*

$$W/T = 0.6/3 = 0.2$$

$$E_o = Q_w/Q$$
$$E_o = 1-(1-W/T)^{2.67}$$
$$E_o = 0.46$$

*Step 3. Using equation 4-13 or chart 4 compute the gutter flow velocity.*

$$V = 0.752/n\ S_L^{0.5}\ S_x^{0.67}\ T^{0.67}$$
$$V = 0.752/(0.016)\ (0.04)^{0.5}\ (0.025)^{0.67}\ (3)^{0.67}$$
$$V = 1.66\ m/sec\ (5.4\ ft/sec)$$

*Step 4. Using equation 4-18 or chart 5, determine the frontal flow efficiency for each grate. Using equation 4-19 or chart 6, determine the side flow efficiency for each grate. Using equation 4-21, compute the interception capacity of each grate.*

*The following table summarizes the results.*

| *Grate* | *Size (width by length)* | *Frontal Flow Efficiency, $R_f$* | *Side Flow Efficiency, $R_s$* | *Interception Capacity, $Q_i$* |
|---|---|---|---|---|
| *P - 50* | *0.6 m by 0.6 m (2.0 ft by 2.0 ft)* | *1.0* | *0.036* | *0.091 $m^3/s$ (3.21 $ft^3/s$)* |
| *Reticuline* | *0.6 m by 0.6 m (2.0 ft by 2.0 ft)* | *0.9* | *0.036* | *0.082 $m^3/s$ (2.89 $ft^3/s$)* |
| *P - 50* | *0.6 m by 1.2 m (2.0 ft by 4.0 ft)* | *1.0* | *0.155* | *0.103 $m^3/s$ (3.63 $ft^3/s$)* |
| *Reticuline* | *0.6 m by 1.2 m (2.0 ft by 4.0 ft)* | *1.0* | *0.155* | *0.103 $m^3/s$ (3.63 $ft^3/s$)* |

*The P-50 parallel bar grate will intercept about 14 percent more flow than the reticuline grate or 48 percent of the total flow as opposed to 42 percent for the reticuline grate. Increasing the length of the grates would not be cost-effective because the increase in side flow interception is small.*

With laboratory data, agencies could develop design curves for their standard grates by using the step-by-step procedure provided in appendix C.



#### 4.4.4.2 Curb-Opening Inlets

Curb-opening inlets are effective in the drainage of highway pavements were flow depth at the curb is sufficient for the inlet to perform efficiently, as discussed in section 4.4.3.1. Curb openings are less susceptible to clogging and offer little interference to traffic operation. They are a viable alternative to grates on flatter grades where grates would be in traffic lanes or would be hazardous for pedestrians or bicyclists.

Curb opening heights vary in dimension, however, a typical maximum height is approximately 100 to 150 mm (4 to 6 in). The length of the curb-opening inlet required for total interception of gutter flow on a pavement section with a uniform cross slope is expressed by equation 4-22:

$$L_T = K_C \, Q^{0.42} \, S_L^{0.3} \left( \frac{1}{n \, S_x} \right)^{0.6} \qquad (4\text{-}22)$$

where: $K_C$ = 0.817 (0.6 in English units)
$L_T$ = curb opening length required to intercept 100 percent of the gutter flow, m (ft)
$S_L$ = longitudinal slope
$Q$ = gutter flow, $m^3/s$ ($ft^3/s$)

The efficiency of curb-opening inlets shorter than the length required for total interception is expressed by equation 4-23:

$$E = 1 - \left(1 - \frac{L}{L_T}\right)^{1.8} \qquad (4\text{-}23)$$

where: $L$ = curb-opening length, m (ft)

Chart 7 is a nomograph for the solution of equation 4-22, and chart 8 provides a solution of equation 4-23.

The length of inlet required for total interception by depressed curb-opening inlets or curb-openings in depressed gutter sections can be found by the use of an equivalent cross slope, $S_e$, in equation 4-22 in place of $S_x$. $S_e$ can be computed using equation 4-24.

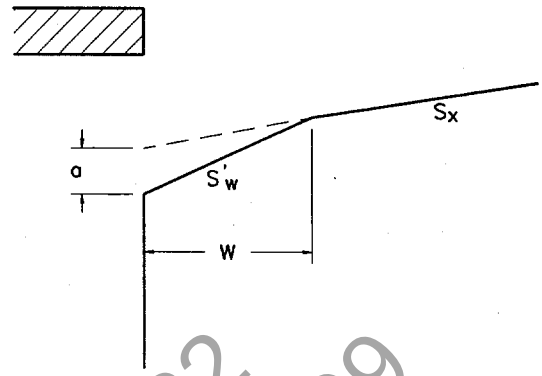


**Figure 4-13. Depressed curb opening inlet.**

$$S_e = S_x + S'_w E_o \qquad (4\text{-}24)$$

where: $S'_w$ = cross slope of the gutter measured from the cross slope of the pavement, $S_x$, m/m (ft/ft)
$S'_w$ = a / [1000 W], (a/[12 w])
a = gutter depression, mm (in)
$E_o$ = ratio of flow in the depressed section to total gutter flow determined by the gutter configuration upstream of the inlet

Figure 4-13 shows the depressed curb inlet for equation 4-24. $E_o$ is the same ratio as used to compute the frontal flow interception of a grate inlet.

As seen from chart 7, the length of curb opening required for total interception can be significantly reduced by increasing the cross slope or the equivalent cross slope. The equivalent cross slope can be increased by use of a continuously depressed gutter section or a locally depressed gutter section.

Using the equivalent cross slope, $S_e$, equation 4-22 becomes:

$$L_T = K_T\, Q^{0.42}\, S_L^{0.3} \left(\frac{1}{n\, S_e}\right)^{0.6} \qquad (4\text{-}25)$$

where: $K_T$ = 0.817 (0.6)

Equation 4-23 is applicable with either straight cross slopes or composite cross slopes. Charts 7 and 8 are applicable to depressed curb-opening inlets using $S_e$ rather than $S_x$.

Equation 4-24 uses the ratio, $E_o$, in the computation of the equivalent cross slope, $S_e$. Example 4-9 demonstrates the procedure to determine spread and then the example uses chart 2 to determine $E_o$.

***Example 4-9***

***Given:*** *A curb-opening inlet with the following characteristics:*

$S_L = 0.01$
$S_x = 0.02$
$Q = 0.05\ m^3/s\ (1.8\ ft^3/s)$
$n = 0.016$

***Find:*** *(1) $Q_i$ for a 3 m (9.8 ft) curb-opening.*
*(2) $Q_i$ for a depressed 3 m (9.8 ft) curb opening inlet with a continuously depressed curb section.*

$a = 25\ mm\ (1\ in)$
$W = 0.6\ m\ (2\ ft)$

***Solution (1):***

*Step 1. Determine the length of curb opening required for total interception of gutter flow using equation 4-22 or chart 7.*

$$L_T = 0.817\ Q^{0.42}\ S_L^{0.3}\ (1/(n\ S_x))^{0.6}$$
$$L_T = 0.817\ (0.05)^{0.42}\ (0.01)^{0.3}\ (1/[(0.016)(0.02)])^{0.6}$$
$$L_T = 7.29\ m\ (23.6\ ft)$$

*Step 2. Compute the curb-opening efficiency using equation 4-23 or chart 8.*

$$L / L_T = 3 / 7.29 = 0.41$$

$$E = 1 - (1 - L / L_T)^{1.8}$$
$$E = 1 - (1 - 0.41)^{1.8}$$
$$E = 0.61$$

*Step 3. Compute the interception capacity.*

$$Q_i = E\ Q = (0.61)(0.05)$$
$$Q_i = 0.031\ m^3/s\ (1.1\ ft^3/s)$$

***Solution (2):***

*Step 1. Use equation 4-4 (chart 2) and equation 4-2 (chart 1) to determine the W/T ratio.*

*Determine spread, T, (Procedure from example 4-2, solution 2)*
*Assume* $Q_s = 0.018\ m^3/s\ (0.64\ ft^3/s)$
$Q_w = Q - Q_s = 0.05 - 0.018 = 0.032\ m^3/s\ (1.1\ ft^3/s)$
$E_o = Q_w / Q = 0.032 / 0.05 = 0.64$

$S_w = S_x + a/W = 0.02 + (25/1000)/0.6$
$S_w = 0.062\text{-}41$
$S_w/S_x = 0.062/0.02 = 3.1$
*Use equation 4-4 or chart 2 to determine W/T*

$W/T = 0.24$
$T = W / (W/T) = 0.6 / 0.24 = 2.5\ m\ (8.2\ ft)$
$T_s = T - W = 2.5 - 0.6 = 1.9\ m\ (6.2\ ft)$

*Use equation 4-2 or chart 1 to obtain $Q_s$*

$Q_s = K/n\ S_x^{1.67}\ S_L^{0.5}\ T_s^{2.67}$
$Q_s = (0.376)/(0.016)\ (0.02)^{1.67}\ (0.01)^{0.5}\ (1.9)^{2.67}$
$Q_s = 0.019\ m^3/s$ *(equals $Q_s$ assumed)*

*Step 2. Determine efficiency of curb opening.*

$S_e = S_x + S'_w E_o = S_x + (a/W)\ E_o = 0.02 + [(25/1000)/(0.6)](0.64)$
$S_e = 0.047$

*Using equation 4-25 or chart 7*

$L_T = K_T\ Q^{0.42}\ S_L^{0.3}\ [1/(n\ S_e)]^{0.6}$
$L_T = (0.817)\ (0.05)^{0.42}\ (0.01)^{0.3}\ [1/((0.016)(0.047))]^{0.6}$
$L_T = 4.37\ m\ (14.3\ ft)$

*Using equation 4-23 or chart 8 to obtain curb inlet efficiency*

$L/L_T = 3/4.37 = 0.70$
$E = 1 - (1 - L/L_T)^{1.8}$
$E = 1 - (1 - 0.69)^{1.8}$
$E = 0.88$

*Step 3. Compute curb opening inflow using equation 4-14*

$Q_i = Q\ E = (0.05)\ (0.88)$
$Q_i = 0.044\ m^3/s\ (1.55\ ft^3/s)$

*The depressed curb-opening inlet will intercept 1.5 times the flow intercepted by the undepressed curb opening.*

*A computer solution is presented in appendix B for both parts 1 and 2 of this example.*

4.4.4.3. Slotted Inlets

Wide experience with the debris handling capabilities of slotted inlets is not available. Deposition in the pipe is the problem most commonly encountered. The configuration of slotted inlets makes them accessible for cleaning with a high pressure water jet.

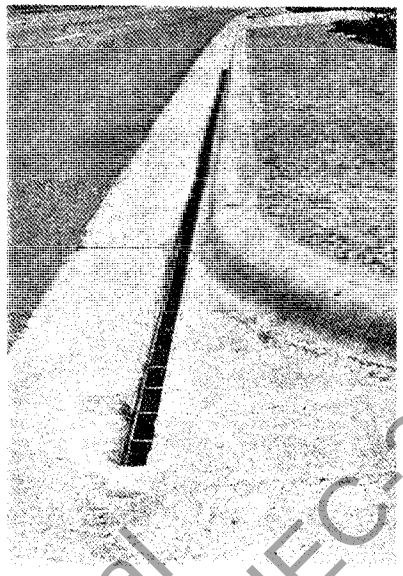

**Figure 4-14. Slotted drain inlet at an intersection.**



Slotted inlets are effective pavement drainage inlets which have a variety of applications. They can be used on curbed or uncurbed sections and offer little interference to traffic operations. An installation is illustrated in figure 4-14.

Flow interception by slotted inlets and curb-opening inlets is similar in that each is a side weir and the flow is subjected to lateral acceleration due to the cross slope of the pavement. Analysis of data from the Federal Highway Administration tests of slotted inlets with slot widths ≥ 45 mm (1.75 in) indicates that the length of slotted inlet required for total interception can be computed by equation 4-22. Chart 7, is therefore applicable for both curb-opening inlets and slotted inlets. Similarly, equation 4-23 is also applicable to slotted inlets and chart 8 can be used to obtain the inlet efficiency for the selected length of inlet.

Use of charts 7 and 8 for slotted inlets is identical to their use for curb-opening inlets. Additional examples to demonstrate the use of the charts are not provided here for that reason. It should be noted, however, that it is much less expensive to add length to an existing slotted inlet to increase interception capacity than it is to add length to an existing curb-opening inlet.

4.4.4.4. Combination Inlets

The interception capacity of a combination inlet consisting of a curb opening and grate placed side-by-side, as shown in figure 4-15, is no greater than that of the grate alone. Capacity is computed by neglecting the curb opening. A combination inlet is sometimes used with a part of the curb opening placed upstream of the grate as illustrated in figure 4-16. The curb opening in such an installation intercepts debris which might otherwise clog the grate and is called a "sweeper" inlet. A sweeper combination inlet has an interception capacity equal to the sum of the curb opening upstream of the grate

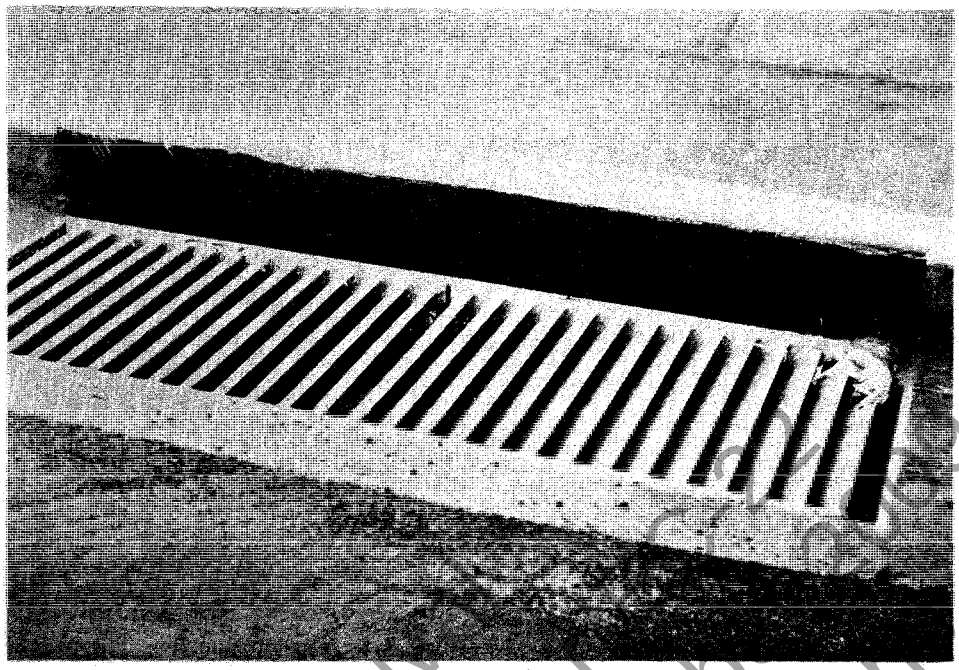

**Figure 4-15. Combination curb-opening, 45 degree tilt-bar grate inlet**

plus the grate capacity, except that the frontal flow and thus the interception capacity of the grate is reduced by interception by the curb opening.

The following example illustrate computation of the interception capacity of a combination curb-opening grate inlet with a portion of the curb opening upstream of the grate.

***Example 4-10***

***Given:*** *A combination curb-opening grate inlet with a 3 m (9.8 ft) curb opening, 0.6 m by 0.6 m (2 ft by 2 ft) curved vane grate placed adjacent to the downstream 0.6 m (2 ft) of the curb opening. This inlet is located in a gutter section having the following characteristics:*

$W = 0.6$ *m (2 ft)*
$Q = 0.05$ $m^3/s$ *(1.8* $ft^3/s$*)*
$S_L = 0.01$
$S_x = 0.02$
$n = 0.016$
*Gutter Depression,* $D = 25$ *mm (1.0 in)*

***Find:*** *Interception capacity,* $Q_i$

***Solution:***

*Step 1. Compute the interception capacity of the curb-opening upstream of the grate,* $Q_{ic}$.

**Figure 4-16. Sweeper combination inlet.**



$L = 3m - 0.6\ m = 2.4\ m\ (7.9\ ft)$

*From example 4-9, Solution 2, Step 2*

$L_T = 4.37\ m\ (14.0\ ft)$
$L / L_T = 2.4 / 4.37 = 0.55$ $\quad E = 1 - (1 - L/L_T)^{1.8}$ *equation 4-23 or chart 8*
$E = 1 - (1 - 0.55)^{1.8}$
$E = 0.76$

$Q_{ic} = E\ Q = (0.76)(0.05) = 0.038\ m^3/s\ (1.3\ ft^3/s)$

*Step 2. Compute the interception capacity of the grate.*

*Flow at grate* $= Q_g = Q - Q_{ic} = 0.05 - 0.038$
$Q_g = 0.012\ m^3/s\ (0.4\ ft^3/s)$

*Determine Spread, T (Procedure from example 4-2, Solution 2)*

*Assume* $Q_s = 0.0003\ m^3/s\ (0.01\ ft^3/s)$
$Q_w = Q - Q_s = 0.0120 - 0.0003 = 0.0117\ m^3/s\ (0.41\ ft^3/s)$
$E_o = Q_w / Q = 0.0117 / 0.0120 = 0.97$
$S_w / S_x = 0.062 / 0.02 = 3.1$
$W/T = 1/\{(1/[(1/(1/E_o - 1))(S_w/S_x) + 1]^{0.375} - 1)(S_w/S_x) + 1\}$ *equation 4-4 or chart 2*

$W/T = 1 / \{(1/[(1/(1/0.97 - 1))(3.1)+1]^{0.375} - 1)(3.1)+1\}$
$W/T = 0.62$
$T = W / (W/T) = 0.6 / 0.62 = 0.97\ m\ (3.2\ ft)$
$T_s = T - W = 0.97 - 0.60 = 0.37\ m\ (1.2\ ft)$
$Q_s = 0.0003\ m^3/s\ (0.01\ ft^3/s)$ *chart 1 or equation 4-2*
$Q_s$ *Assumed* $= Q_s$ *calculated*

*Determine velocity, V*

$V = Q / A = Q / [0.5T^2S_x + 0.5DW]$
$V = 0.0115/[(0.5)(0.97)^2(0.02) + (0.5)(25/1000)(0.6)]$
$V = 0.68\ m/s\ (2.23\ ft/s)$

$R_f = 1.0$ *chart 5*

$R_s = 1 / (1 + (0.0828\ V^{1.8})/(S_x\ L^{2.3}))$ *equation 4-19 or chart 6*
$R_s = 1 / (1 + [(0.0828)\ (0.68)^{1.8}]/[(0.02)\ (0.6)^{2.3}]$
$R_s = 0.13$

$Q_{ig} = Q_g\ [R_f\ E_o + R_s\ (1-E_o)]$ *equation 4-21*
$Q_{ig} = 0.0115\ [\ (1.0)(0.97) + (0.13)(1 - 0.97)]$
$Q_{ig} = 0.0112\ m^3/s\ (0.40\ ft^3/s)$

*Step 3. Compute the total interception capacity. (Note: Interception capacity of curb opening adjacent to grate was neglected.)*

$Q_i = Q_{ic} + Q_{ig} = 0.0385 + 0.0112$
$Q_i = 0.0497\ m^3/s\ (1.76\ ft^3/s)$ *(approximately 100% of the total initial flow)*

*A computer solution of this example is presented in appendix B.*

The use of depressed inlets and combination inlets enhances the interception capacity of the inlet. Example 4-7 determined the interception capacity of a depressed curved vane grate, 0.6 m by 0.6 m (2 ft by 2 ft), example 4-9 for an undepressed curb opening inlet, length = 3.0 m (9.8 ft) and a depressed curb opening inlet, length = 3.0 m (9.8 ft), and example 4-10 for a combination of 0.6 m by 0.6 m (2 ft by 2 ft) depressed curve vane grate located at the downstream end of 3.0 m (9.8 ft) long depressed curb opening inlet. The geometries of the inlets and the gutter slopes were consistent in the examples and table 4-6 summarizes a comparison of the intercepted flow of the various configurations.

From table 4-6, it can be seen that the combination inlet intercepted approximately 100% of the total flow whereas the curved vane grate alone only intercepted 66% of the total flow. The depressed curb opening intercepted 90% of the total flow. However, if the curb opening was undepressed, it would have only intercepted 62% of the total flow.

### 4.4.5. Interception Capacity of Inlets In Sag Locations

Inlets in sag locations operate as weirs under low head conditions and as orifices at greater depths. Orifice flow begins at depths dependent on the grate size, the curb opening height, or the slot width of the inlet. At depths between those at which weir flow definitely prevails and those at which orifice flow

**Table 4-6. Comparison of inlet interception capacities.**

| Inlet Type | Intercepted Flow, $Q_i$ |
|---|---|
| Curved Vane - Depressed | 0.033 $m^3/s$ (1.2 $ft^3/s$) (example 4-7) |
| Curb Opening - Undepressed | 0.031 $m^3/s$ (1.1 $ft^3/s$) (example 4-9 (1)) |
| Curb Opening - Depressed | 0.045 $m^3/s$ (1.59 $ft^3/s$) (example 4-9 (2)) |
| Combination Inlet (Curved Vane and Curb Opening) - Depressed | 0.050 $m^3/s$ (1.76 $ft^3/s$) (example 4-10) |

prevails, flow is in a transition stage. At these depths, control is ill-defined and flow may fluctuate between weir and orifice control. Design procedures presented here are based on a conservative approach to estimating the capacity of inlets in sump locations.

The efficiency of inlets in passing debris is critical in sag locations because all runoff which enters the sag must be passed through the inlet. Total or partial clogging of inlets in these locations can result in hazardous ponded conditions. Grate inlets alone are not recommended for use in sag locations because of the tendencies of grates to become clogged. Combination inlets or curb-opening inlets are recommended for use in these locations.



4.4.5.1. Grate Inlets

A grate inlet in a sag location operates as a weir to depths dependent on the bar configuration and size of the grate and as an orifice at greater depths. Grates of larger dimension will operate as weirs to greater depths than smaller grates or grates with less opening area.

The capacity of grate inlets operating as weirs is:

$$Q_i = C_w \, P \, d^{1.5} \tag{4-26}$$

where: $P$ = perimeter of the grate in m (ft) disregarding the side against the curb
$C_w$ = 1.66 (3.0 English units)
$d$ = flow depth, m (ft)

The capacity of a grate inlet operating as an orifice is:

$$Q_i = C_o \, A_g \, (2 \, g \, d)^{0.5} \tag{4-27}$$

where: $C_o$ = orifice coefficient = 0.67
$A_g$ = clear opening area of the grate, $m^2$ ($ft^2$)
$g$ = 9.80 $m/s^2$ (32.16 $ft/s^2$)

Use of equation 4-27 requires the clear area of opening of the grate. Tests of three grates for the Federal Highway Administration[27] showed that for flat bar grates, such as the P-50x100 and P-30 grates, the clear opening is equal to the total area of the grate less the area occupied by longitudinal and lateral

bars. The curved vane grate performed about 10 percent better than a grate with a net opening equal to the total area less the area of the bars projected on a horizontal plane. That is, the projected area of the bars in a curved vane grate is 68 percent of the total area of the grate leaving a net opening of 32 percent, however the grate performed as a grate with a net opening of 35 percent. Tilt-bar grates were not tested, but exploration of the above results would indicate a net opening area of 34 percent for the 30-degree tilt-bar and zero for the 45-degree tilt-bar grate. Obviously, the 45-degree tilt-bar grate would have greater than zero capacity. Tilt-bar and curved vane grates are not recommended for sump locations where there is a chance that operation would be as an orifice. Opening ratios for the grates are given on chart 9.

Chart 9 is a plot of equations 4-26 and 4-27 for various grate sizes. The effects of grate size on the depth at which a grate operates as an orifice is apparent from the chart. Transition from weir to orifice flow results in interception capacity less than that computed by either the weir or the orifice equation. This capacity can be approximated by drawing in a curve between the lines representing the perimeter and net area of the grate to be used.

Example 4-11 illustrates use of equations 4-26 and 4-27 and chart 9.

***Example 4-11***

***Given:*** *Under design storm conditions a flow of 0.10 $m^3/s$ (3.5 $ft^3/s$) bypasses each of the flanking inlets resulting in a total flow to the sag inlet of 0.23 $m^3/s$ (8.1 $ft^3/s$). Also,*

$S_x = 0.05$
$n = 0.016$
$T_{allowable} = 3\ m\ (9.8\ ft)$

***Find:*** *Find the grate size required and depth at curb for the sag inlet assuming 50% clogging.*

***Solution:***

*Step 1. Determine the required grate perimeter.*

$d = T S_x = (3.0)(0.05)$
$d = 0.15\ m\ (0.49\ ft)$
$P = Q_i / [C_w d^{1.5}]$ *equation 4-26 or chart 9*
$P = (0.23)/[(1.66)(0.15)^{1.5}]$
$P = 2.4\ m\ (8\ ft)$

*Some assumptions must be made regarding the nature of the clogging in order to compute the capacity of a partially clogged grate. If the area of a grate is 50 percent covered by debris so that the debris-covered portion does not contribute to interception, the effective perimeter will be reduced by a lesser amount than 50 percent. For example, if a 0.6 m by 1.2 m (2 ft by 4 ft) grate is clogged so that the effective width is 0.3 m (1 ft), then the perimeter, P = 0.3 + 1.2 + 0.3 = 1.8 m (6 ft), rather than 2.4 m (8 ft), the total perimeter, or 1.2 m (4 ft), half of the total perimeter. The area of the opening would be reduced by 50 percent and the perimeter by 25 percent. Therefore, assuming 50 percent clogging along the length of the grate, a 1.2 m by 1.2 m (4 ft by 4 ft), 0.6 m by 1.8 m (2 ft by 6 ft), or a .9 m by 1.5 m (3 ft by 5 ft) grate would meet requirements of a 2.4 m (8 ft) perimeter 50 percent clogged.*

*Assuming 50 percent clogging along the grate length,*

$P_{effective} = 2.4\ m = (0.5)\ (2)\ W + L$

*if* $W = 0.6\ m$ *then* $L \geq 1.8\ m\ (6\ ft)$
*if* $W = 0.9\ m$ *then* $L \geq 1.5\ m\ (5\ ft)$

*Select a double 0.6 m by 0.9 m (2 ft by 3 ft) grate.*

$P_{effective} = (0.5)\ (2)\ (0.6) + (1.8)$
$P_{effective} = 2.4\ m\ (8\ ft)$

*Step 2. Check depth of flow at curb using equation 4-26 or chart 9.*

$d = [Q/(C_w\ P)]^{0.67}$
$d = [0.23/((1.66)\ (2.4))]^{2.67}$
$d = 0.15\ m\ (0.5\ ft)$

*Therefore, ok*

***Conclusion:***

*A double 0.6 m by 0.9 m (2 ft by 3 ft) grate 50 percent clogged is adequate to intercept the design storm flow at a spread which does not exceed design spread. However, the tendency of grate inlets to clog completely warrants consideration of a combination inlet or curb-opening inlet in a sag where ponding can occur, and flanking inlets on the low gradient approaches.*

4.4.5.2. Curb-Opening Inlets

The capacity of a curb-opening inlet in a sag depends on water depth at the curb, the curb opening length, and the height of the curb opening. The inlet operates as a weir to depths equal to the curb opening height and as an orifice at depths greater than 1.4 times the opening height. At depths between 1.0 and 1.4 times the opening height, flow is in a transition stage.

Spread on the pavement is the usual criterion for judging the adequacy of a pavement drainage inlet design. It is also convenient and practical in the laboratory to measure depth at the curb upstream of the inlet at the point of maximum spread on the pavement. Therefore, depth at the curb measurements from experiments coincide with the depth at curb of interest to designers. The weir coefficient for a curb-opening inlet is less than the usual weir coefficient for several reasons, the most obvious of which is that depth measurements from experimental tests were not taken at the weir, and drawdown occurs between the point where measurement were made and the weir.

The weir location for a depressed curb-opening inlet is at the edge of the gutter, and the effective weir length is dependent on the width of the depressed gutter and the length of the curb opening. The weir location for a curb-opening inlet that is not depressed is at the lip of the curb opening, and its length is equal to that of the inlet, as shown in chart 10.

The equation for the interception capacity of a depressed curb-opening inlet operating as a weir is:

$$Q_i = C_w (L + 1.8\ W)\ d^{1.5} \tag{4-28}$$

where: $C_w$ = 1.25 (2.3 In English)
$L$ = length of curb opening, m (ft)
$W$ = lateral width of depression, m (ft)
$d$ = depth at curb measured from the normal cross slope, m (ft), i.e., $d = T\ S_x$

The weir equation is applicable to depths at the curb approximately equal to the height of the opening plus the depth of the depression. Thus, the limitation on the use of equation 4-28 for a depressed curb-opening inlet is:

$$d \le h + a/(1000) \quad (d \le h + a/12, \text{ English units}) \tag{4-29}$$

where: $h$ = height of curb-opening inlet, m (ft)
$a$ = depth of depression, mm (in)

Experiments have not been conducted for curb-opening inlets with a continuously depressed gutter, but it is reasonable to expect that the effective weir length would be as great as that for an inlet in a local depression. Use of equation 4-28 will yield conservative estimates of the interception capacity.

The weir equation for curb-opening inlets without depression becomes:

$$Q_i = C_w\ L\ d^{1.5} \tag{4-30}$$

Without depression of the gutter section, the weir coefficient, $C_w$, becomes 1.60 (3.0, English system). The depth limitation for operation as a weir becomes $d \le h$.

At curb-opening lengths greater than 3.6m (12 ft), equation 4-30 for non-depressed inlet produces intercepted flows which exceed the values for depressed inlets computed using equation 4-28. Since depressed inlets will perform at least as well as non-depressed inlets of the same length, equation 4-30 should be used for all curb opening inlets having lengths greater than 3.6 m (12 ft).

Curb-opening inlets operate as orifices at depths greater than approximately 1.4 times the opening height. The interception capacity can be computed by equation 4-31a and equation 4-31b. These equations are applicable to depressed and undepressed curb-opening inlets. The depth at the inlet includes any gutter depression.

$$Q_i = C_o\ h\ L\ (2\ g\ d_o)^{0.5} \tag{4-31a}$$

or

$$Q_i = C_o\ A_g \left[2\ g \left(d_i - \frac{h}{2}\right)\right]^{0.5} \tag{4-31b}$$

where: $C_o$ = orifice coefficient (0.67)

$d_o$ = effective head on the center of the orifice throat, m (ft)

L = length of orifice opening, m (ft)

$A_g$ = clear area of opening, $m^2$ ($ft^2$)

$d_i$ = depth at lip of curb opening, m (ft)

h = height of curb-opening orifice, m (ft)

h = T $S_x$ + a/1000 (a/12 in English system)

The height of the orifice in equations 4-31a and 4-31b assumes a vertical orifice opening. As illustrated in figure 4-17, other orifice throat locations can change the effective depth on the orifice and the dimension ($d_i$ - h/2). A limited throat width could reduce the capacity of the curb-opening inlet by causing the inlet to go into orifice flow at depths less than the height of the opening.

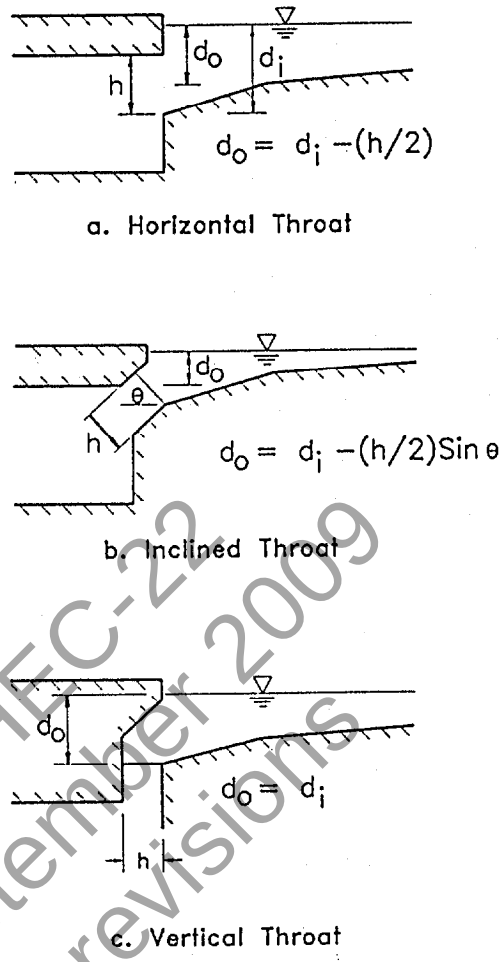


**Figure 4-17. Curb-opening inlets.**

For curb-opening inlets with other than vertical faces (see figure 4-17), equation 4-31a can be used with:

h = orifice throat width, m (ft)

$d_o$ = effective head on the center of the orifice throat, m (ft)

Chart 10 provides solutions for equations 4-28 and 4-31 for depressed curb-opening inlets, and chart 11 provides solutions for equations 4-30 and 4-31 for curb-opening inlets without depression. Chart 12 is provided for use for curb openings with other than vertical orifice openings.

Example 4-12 illustrates the use of charts 11 and 12.



***Example 4-12***

*Given: Curb opening inlet in a sump location with*

*L = 2.5 m (8.2 ft)*
*h = 0.13 m (0.43 ft)*

*(1) Undepressed curb opening*
*$S_x$ = 0.02*
*T = 2.5 m (8.2 ft)*

*(2) Depressed curb opening*

$S_x = 0.02$
$a = 25\ mm\ (1\ in)$
$W = 0.6\ m\ (2\ ft)$
$T = 2.5\ m\ (8.2\ ft)$

***Find:*** $Q_i$

***Solution (1):***

*Step 1. Determine depth at curb.*

$d = T S_x = (2.5)(0.02)$
$d = 0.05\ m\ (0.16\ ft)$
$d = 0.05\ m \leq h = 0.13\ m$, *therefore weir flow controls*

*Step 2. Use equation 4-30 or chart 11 to find $Q_i$.*

$Q_i = C_w L d^{1.5}$
$Q_i = (1.60)(2.5)(0.05)^{1.5} = 0.045\ m^3/s\ (1.6\ ft^3/s)$

***Solution (2):***

*Step 1. Determine depth at curb, $d_i$*

$d_i = d + a$
$d_i = S_x T + a = (0.02)(2.5) + 25/1000$
$d_i = 0.075\ m\ (0.25\ ft)$

$d_i = 0.075\ m < h = 0.13\ m$, *therefore weir flow controls*

*Step 2. Use equation 4-28 or chart 10 to find $Q_i$.*

$P = L + 1.8\ W = 2.5\ m + (1.8)(0.6)$
$P = 3.58\ m\ (11.7\ ft)$

$Q_i = C_w (L + 1.8\ W) d^{1.5}$
$Q_i = (1.25)(3.58)(0.05)^{1.5} = 0.048\ m^3/s\ (1.7\ ft^3/s)$

*The depressed curb-opening inlet has 10 percent more capacity than an inlet without depression.*

*A computer solution is presented in appendix B for both parts 1 and 2 of this example.*

4.4.5.3 Slotted Inlets

Slotted inlets in sag locations perform as weirs to depths of about 0.06 m (0.2 ft), dependent on slot width. At depths greater than about 0.12 m, (0.4 ft), they perform as orifices. Between these depths, flow is in a transition stage. The interception capacity of a slotted inlet operating as a weir can be computed by an equation of the form:

$$Q_i = C_w L (d^{1.5}) \tag{4-32}$$

where: $C_w$ = weir coefficient; various with flow depth and slot length; typical value is approximately 1.4 (2.48 for English units)
$L$ = length of slot, m (ft)
$d$ = depth at curb measured from the normal cross slope, m (ft)

The interception capacity of a slotted inlet operating as an orifice can be computed by equation 4-33:

$$Q_i = 0.8 L W (2 g d)^{0.5} \tag{4-33}$$

where: $W$ = width of slot, m (ft)
$L$ = length of slot, m (ft)
$d$ = depth of water at slot for $d > 0.12$ m (0.4ft), m (ft)
$g$ = 9.81 m/s$^2$ (32.16 ft/s$^2$)

For a slot width of 45 mm (1.75 in), equation 4-33 becomes:

$$Q_i = 0.16 L d^{0.5} \tag{4-34}$$

Chart 13 provides solutions for weir and orifice flow conditions as represented by equations 4-32 and 4-33. As indicated in chart 13, the transition between weir and orifice flow occurs at different depths. To conservatively compute the interception capacity of slotted inlets in sump conditions in the transition area, original conditions should be assumed. Due to clogging characteristics, slotted drains are not recommended in sag locations.



***Example 4-13***

***Given:*** *A slotted inlet located along a curb having a slot width of 45 mm (1.75 in). The gutter flow at the upstream end of the inlet is 0.14 m$^3$/s (4.9 ft$^3$/s).*

***Find:*** *The length of slotted inlet required to limit maximum depth at the curb to 0.09 m (3.6 in) assuming no clogging.*

***Solution:***

*Using equation 4-34 or chart 13*

$$L = Q_i / [(0.16)(d^{0.5})]$$
$$L = (0.14) / [(0.16)(0.09)^{0.5}] = 2.91 \text{ m } (9.5 \text{ ft}).$$

4.4.5.4 Combination Inlets

Combination inlets consisting of a grate and a curb opening are considered advisable for use in sags where hazardous ponding can occur. Equal length inlets refer to a grate inlet placed along side a curb opening inlet, both of which have the same length. A sweeper inlet refers to a grate inlet placed at the downstream end of a curb opening inlet. The curb opening inlet is longer than the grate inlet and

intercepts the flow before the flow reaches the grate. The sweeper inlet is more efficient than the equal length combination inlet and the curb opening has the ability to intercept any debris which may clog the grate inlet. The interception capacity of the equal length combination inlet is essentially equal to that of a grate alone in weir flow. In orifice flow, the capacity of the equal length combination inlet is equal to the capacity of the grate plus the capacity of the curb opening.

Equation 4-26 and chart 9 can be used for weir flow in combination inlets in sag locations. Assuming complete clogging of the grate, equations 4-28, 4-30, and 4-31 and charts 10, 11 and 12 for curb-opening inlets are applicable.

Where depth at the curb is such that orifice flow occurs, the interception capacity of the inlet is computed by adding equations 4-27 and 4-31a as follows:

$$Q_i = 0.67\ A_g\ (2\ g\ d)^{0.5} + 0.67\ h\ L\ (2\ g\ d_o)^{0.5} \qquad (4\text{-}35)$$

where:
- $A_g$ = clear area of the grate, $m^2$ ($ft^2$)
- $g$ = 9.81 m/s/s (32.16 ft/s/s)
- $d$ = depth at the curb, m (ft)
- $h$ = height of curb opening orifice, m (ft)
- $L$ = length of curb opening, m (ft)
- $d_o$ = effective depth at the center of the curb opening orifice, m (ft)

Trial and error solutions are necessary for determining the depth at the curb for a given flow rate using charts 9, 10 and 11 for orifice flow. Different assumptions for clogging of the grate can also be examined using these charts as illustrated by the following example.



***Example 4-14***

***Given:*** *A combination inlet in a sag location with the following characteristics:*

*Grate - 0.6 m by 1.2 m (2 ft by 4 ft) P-50*
*Curb opening - $L$ = 1.2 m (4 ft)*
*$h$ = 0.1 m (3.9 in)*
*$Q$ = 0.15 $m^3/s$ (5.3 $ft^3/s$)*
*$S_x$ = 0.03*

***Find:*** *Depth at curb and spread for:*
*(1) Grate clear of clogging*
*(2) Grate 100 percent clogged*

***Solution (1):***

*Step 1. Compute depth at curb.*

*Assuming grate controls interception:*
$P = 2W + L = 2(0.6) + 1.2$
$P = 2.4$ m (7.9 ft)

*From equation 4-26 or chart 9*

$$d = [Q_i / (C_w P)]^{0.67}$$
$$d = [(0.15) / \{(1.66)(2.4)\}]^{0.67} = 0.11 \text{ m } (0.36 \text{ ft})$$

*Step 2. Compute associated spread.*

$$T = d / S_x = (0.11) / (0.03)$$
$$T = 3.67 \text{ m } (12 \text{ ft})$$

***Solution (2):***

*Step 1. Compute depth at curb.*

*Assuming grate clogged. Using chart 11 or equation 4-31b with $Q = 0.15 \text{ m}^3/\text{s}$ $(5.3 \text{ ft}^3/\text{s})$:*

$$d = \{Q_i/(C_o\, h\, L)\}^2 / (2g) + h/2$$
$$d = \{(0.15)/[(0.67)(0.10)(1.2)]\}^2 / [(2)(9.81)] + (0.1/2) = 0.24 \text{ m } (0.8 \text{ ft})$$

*Step 2. Compute associated spread.*

$$T = d / S_x = (0.24) / (0.03)$$
$$T = 8.0 \text{ m } (26.2 \text{ ft})$$

*Interception by the curb-opening only will be in a transition stage between weir and orifice flow with a depth at the curb of about 0.24 m (0.8 ft). Depth at the curb and spread on the pavement would be almost twice as great if the grate should become completely clogged.*



### 4.4.6. Inlet Locations

The location of inlets is determined by geometric controls which require inlets at specific locations, the use and location of flanking inlets in sag vertical curves, and the criterion of spread on the pavement. In order to adequately design the location of the inlets for a given project, the following information is needed:

- a layout or plan sheet suitable for outlining drainage areas,
- road profiles,
- typical cross sections,
- grading cross sections,
- superelevation diagrams, and
- contour maps.

#### 4.4.6.1 Geometric Controls

There are a number of locations where inlets may be necessary with little regard to contributing drainage area. These locations should be marked on the plans prior to any computations regarding discharge, water spread, inlet capacity, or flow bypass. Examples of such locations follow.

- At all low points in the gutter grade.
- Immediately upstream of median breaks, entrance/exit ramp gores, cross walks, and street intersections., i.e. at any location where water could flow onto the travelway.
- Immediately upgrade of bridges (to prevent pavement drainage from flowing onto bridge decks).
- Immediately downstream of bridges (to intercept bridge deck drainage)
- Immediately up grade of cross slope reversals.
- Immediately up grade from pedestrian cross walks.
- At the end of channels in cut sections.
- On side streets immediately up grade from intersections.
- Behind curbs, shoulders or sidewalks to drain low areas.

In addition to the areas identified above, runoff from areas draining towards the highway pavement should be intercepted by roadside channels or inlets before it reaches the roadway. This applies to drainage from cut slopes, side streets, and other areas alongside the pavement. Curbed pavement sections and pavement drainage inlets are inefficient means for handling extraneous drainage.



#### 4.4.6.2 Inlet Spacing on Continuous Grades

Design spread is the criterion used for locating storm drain inlets between those required by geometric or other controls. The interception capacity of the upstream inlet will define the initial spread. As flow is contributed to the gutter section in the downstream direction, spread increases. The next downstream inlet is located at the point where the spread in the gutter reaches the design spread. Therefore, the spacing of inlets on a continuous grade is a function of the amount of upstream bypass flow, the tributary drainage area, and the gutter geometry.

For a continuous slope, the designer may establish the uniform design spacing between inlets of a given design if the drainage area consists of pavement only or has reasonably uniform runoff characteristics and is rectangular in shape. In this case, the time of concentration is assumed to be the same for all inlets. The following procedure and example illustrates the effects of inlet efficiency on inlet spacing.

In order to design the location of inlets on a continuous grade, the computation sheet shown in figure 4-18 may be used to document the analysis. A step by step procedure for the use of figure 4-18 follows.

Step 1. Complete the blanks at the top of the sheet to identify the job by state project number, route, date, and your initials.

Step 2. Mark on a plan the location of inlets which are necessary even without considering any specific drainage area, such as the locations described in section 4.4.6.1.

Step 3. Start at a high point, at one end of the job if possible, and work towards the low point. Then begin at the next high point and work backwards toward the same low point.

Step 4. To begin the process, select a trial drainage area approximately 90 m to 150 m (300 to 500 ft) long below the high point and outline the area on the plan. Include any area that may drain over the curb, onto the roadway. However, where practical, drainage from large areas behind the curb should be intercepted before it reaches the roadway or gutter.

## INLET SPACING COMPUTATION SHEET

Date_____ SP_____ ROUTE_____
Computed By:_____ Sheet __ of____

| INLET | | GUTTER DISCHARGE Design Frequency_____ | | | | | GUTTER DISCHARGE Allowable Spread_____ | | | | | | | | INLET DISCHARGE | | | RMK |
|---|---|---|---|---|---|---|---|---|---|---|---|---|---|---|---|---|---|---|
| No. (1) | Stat. (2) | Drain. Area A (ha) (3) | Run-off Coeff. C (4) | Time of Conc. $t_c$ (min) (5) | Rain. Inten. I (mm/hr) (6) | $Q = CIA/K_c$ ($m^3/s$) (7) | Long. Slope $S_L$ (m/m) (8) | Cross Slope $S_x$ or $S_w$ (m/m) (9) | Prev. By-pass Flow ($m^3/s$) (10) | Total Gutter Flow ($m^3/s$) (11) | Depth d (m) (12) | Grate or Gutter Width W (m) (13) | Spread T (m) (14) | W/T (15) | Inlet Type (16) | Inter-cept Flow $Q_i$ ($m^3/s$) (17) | By-pass Flow $Q_b$ ($m^3/s$) (18) | (19) |
| | | | | | | | | | | | | | | | | | | |
| | | | | | | | | | | | | | | | | | | |
| | | | | | | | | | | | | | | | | | | |
| | | | | | | | | | | | | | | | | | | |
| | | | | | | | | | | | | | | | | | | |
| | | | | | | | | | | | | | | | | | | |
| | | | | | | | | | | | | | | | | | | |
| | | | | | | | | | | | | | | | | | | |
| | | | | | | | | | | | | | | | | | | |
| | | | | | | | | | | | | | | | | | | |
| | | | | | | | | | | | | | | | | | | |
| | | | | | | | | | | | | | | | | | | |
| | | | | | | | | | | | | | | | | | | |
| | | | | | | | | | | | | | | | | | | |
| | | | | | | | | | | | | | | | | | | |
| | | | | | | | | | | | | | | | | | | |



**Figure 4-18. Inlet spacing computation sheet.**

Step 5. Col. 1, Col. 2, Col. 19 — Describe the location of the proposed inlet by number and station and record this information in columns 1 and 2. Identify the curb and gutter type in column 19, remarks. A sketch of the cross section should be prepared.

Step 6. Col. 3 — Compute the drainage area (hectares) outlined in step 4 and record in column 3.

Step 7. Col. 4 — Determine the runoff coefficient, C, for the drainage area. Select a C value provided in table 3-1 or determine a weighted C value using equation 3-2 and record the value in column 4.

Step 8. Col. 5 — Compute the time of concentration, $t_c$, in minutes, for the first inlet and record in column 5. The time of concentration is the time for the water to flow from the most hydraulically remote point of the drainage area to the inlet, as discussed in section 3.2.2.3. The minimum time of concentration is 5 minutes.

Step 9. Col. 6 — Using the time of concentration, determine the rainfall intensity from the Intensity-Duration-Frequency (IDF) curve for the design frequency. Enter the value in column 6.

Step 10. Col. 7 — Calculate the flow in the gutter using equation 3-1, $Q = CIA/K_c$. The flow is calculated by multiplying column 3 times column 4 times column 6 divided by $K_c$. Using the SI system of units, $K_c$ = 360 (= 1 for English units). Enter the flow value in column 7.

Step 11. Col. 8 — From the roadway profile, enter in column 8 the gutter longitudinal slope, $S_L$, at the inlet, taking into account any superelevation.

Step 12. Col. 9, Col. 13 — From the cross section, enter the cross slope, $S_x$, in column 9 and the grate or gutter width, W, in column 13.

Step 13. Col. 11, Col. 10 — For the first inlet in a series, enter the value from column 7 into column 11, since there was no previous bypass flow. Additionally, if the inlet is the first in a series, enter 0 into column 10.

Step 14. Col. 14, Col. 12 — Determine the spread, T, by using equations 4-2 and 4-4 or charts 1 and 2 and enter the value in column 14. Also, determine the depth at the curb, d, by multiplying the spread by the appropriate cross slope, and enter the value in column 12. Compare the calculated spread with the allowable spread as determined by the design criteria outlined in section 4.1. Additionally, compare the depth at the curb with the actual curb height in column 19. If the calculated spread, column 14, is near the allowable spread and the depth at the curb is less than the actual curb height, continue on to step 15. Else, expand or decrease the drainage area up to the first inlet to increase or decrease the spread, respectively. The drainage area can be expanded by increasing the length to the inlet and it can be decreased by decreasing the distance to the inlet. Then, repeat steps 6 through 14 until appropriate values are obtained.

Step 15. Col. 15 — Calculate W/T and enter the value in column 15.

Step 16. Col. 16 — Select the inlet type and dimensions and enter the values in column 16.

Step 17. Col. 17 Calculate the flow intercepted the grate, $Q_i$, and enter the value in column 17. Use equations 4-16 and 4-13 or charts 2 and 4 to define the gutter flow. Use chart 5 and equation 4-19 or chart 6 to define the flow intercepted by the grate. Use equations 4-22 and 4-23 or charts 7 and 8 for curb opening inlets. Finally, use equation 4-21 to determine the intercepted flow.

Step 18. Col. 18 Determine the bypass flow, $Q_b$, and enter into column 18. The bypass flow is column 11 minus column 17.

Step 19. Col. 1-4 Proceed to the next inlet down the grade. To begin the procedure, select a drainage area approximately 90 m to 120 m (300 to 400 ft) below the previous inlet for a first trial. Repeat steps 5 through 7 considering only the area between the inlets.

Step 20. Col. 5 Compute the time of concentration for the next inlet based upon the area between the consecutive inlets and record this value in column 5.

Step 21. Col. 6 Determine the rainfall intensity from the IDF curve based upon the time of concentration determined in step 19 and record the value in column 6.

Step 22. Col. 7 Determine the flow in the gutter by using equation 3-1 and record the value in column 7.

Step 23. Col 11 Record the value from column 18 of the previous line into column 10 of the current line. Determine the total gutter flow by adding column 7 and column 10 and record in column 11.

Step 24. Col. 12 Col. 14 Determine the spread and the depth at the curb as outlined in step 14. Repeat steps 18 through 24 until the spread and the depth at the curb are within the design criteria.

Step 25. Col. 16 Select the inlet type and record in column 16.

Step 26. Col. 17 Determine the intercepted flow in accordance with step 17.

Step 27. Col. 18 Calculate the bypass flow by subtracting column 17 from column 11. This completes the spacing design for the inlet.

Step 28. Repeat steps 19 through 27 for each subsequent inlet down to the low point.

The following example illustrates the use of this procedure and figure 4-18.

***Example 4-15***

***Given:*** *The storm drainage system illustrated in figure 4-19 with the following roadway characteristics:*

$n = 0.016$
$S_x = 0.02$
$S_L = 0.03$
*Allowable spread = 2.0 m (6.6 ft)*
*Gutter and shoulder cross slope = 0.04*
*For maintenance reasons, inlet spacing is limited to 110 m (360 ft)*

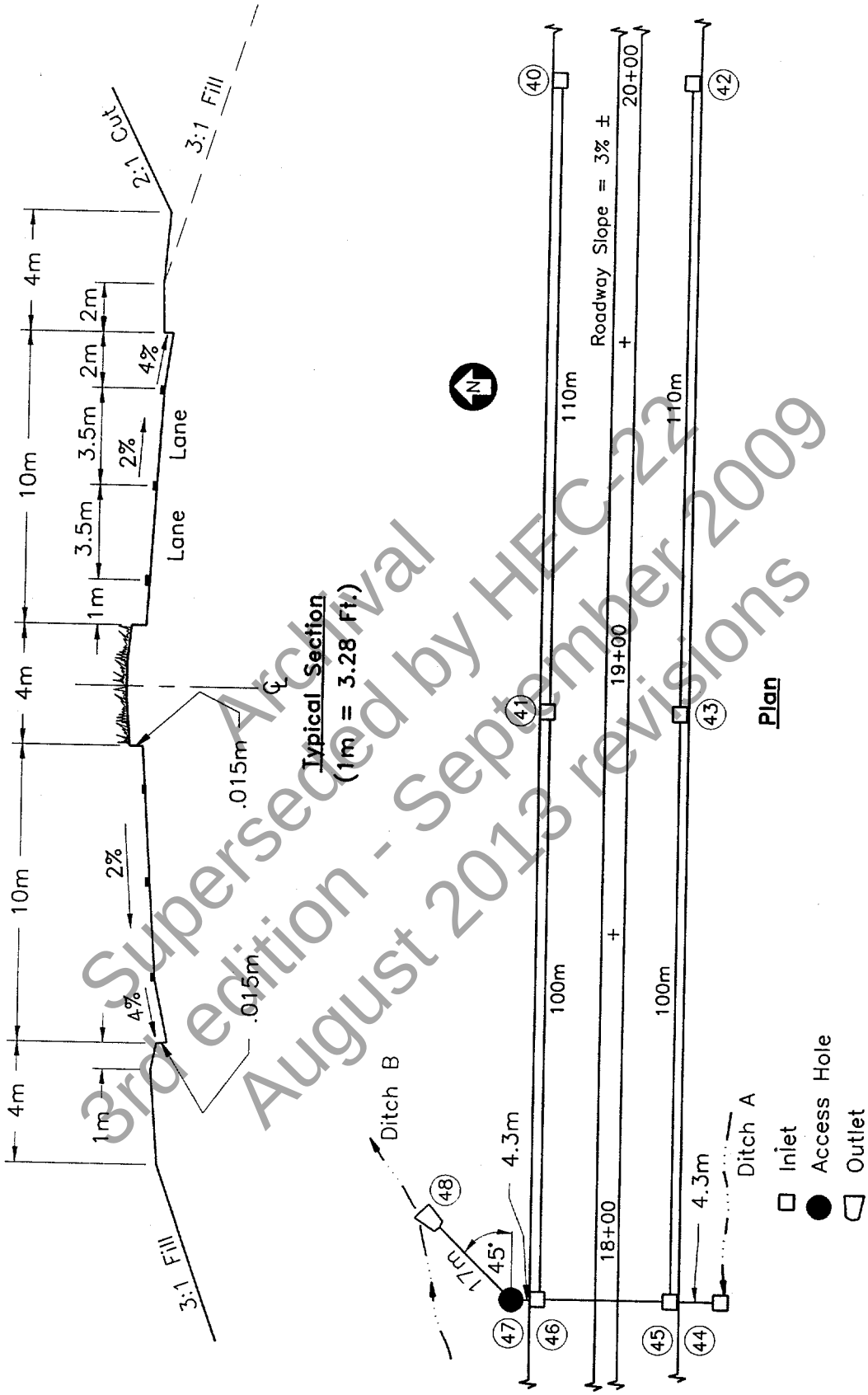




**Figure 4-19. Storm drainage system for example 4-15.**

**Find:** *The maximum design inlet spacing for a 0.6 m wide by 0.9 m long (2 ft by 3 ft) P 50 x 100 grate, during a 10 - year storm event.*

**Solution:** *Use the inlet computation sheet shown in figure 4-20. The entries are shown in figure 4-20.*

*Steps 1-4* — *The computations can begin at either of the inlets located at station 20+00. The initial drainage area consists of a 13 m wide roadway section with a length of 200 m. The top of the drainage basin is located at station 22+00.*

*Step 5* — *Col. 1* — *Inlet # 40*
*Col. 2* — *Station 20+00*
*Col. 19* — *composite gutter with a curb height = 0.15 m (0.50 ft).*

*Step 6* — *Col. 3* — *Distance from top of drainage area to first inlet = 22+00 - 20+00 = 200 m. Width = 13 m. Drainage area = (200)(13) = 2600 m² = 0.26 ha (0.64 ac)*

*Step 7* — *Col. 4* — *Runoff coefficient, C = 0.73* *(table 3-1)*

*Step 8* — *Col. 5* — *First calculate velocity of gutter flow using equation 3-4 and table 3-3.*

$$V = K S_p^{0.5} = (0.619)(3.0)^{0.5} = 1.1 \text{ m/s } (3.5 \text{ ft/s})$$

*Calculate the time of concentration, $t_c$, using equation 3-6.*

$$t_c = L / [60 V] = (200) / [(60)(1.1)] = 3.0 \text{ min (use 5 min minimum)}$$

*Step 9* — *Col. 6* — *Determine rainfall intensity, I, from IDF curve.*

$$I = 180 \text{ mm/hr}$$ *(figure 3-1)*

*Step 10* — *Col. 7* — *Determine gutter flow rate, Q, using equation 3-1.*

$$Q = CIA/K_c = (0.73)(180)(0.26)/(360) = 0.095 \text{ m}^3/\text{s } (3.4 \text{ ft}^3/\text{s})$$

*Step 11* — *Col. 8* — $S_L = 0.03$ m/m

*Step 12* — *Col. 9* — $S_w = 0.04$ m/m

*Step 13* — *Col. 13* — $W = 0.6$ m (2 ft)

*Step 14* — *Col. 14* — *Determine spread, T, using equation 4-2 or chart 1.*

$$T = [\{Qn\} / \{K S_x^{1.67} S_L^{0.5}\}]^{0.375}$$

$$T = [\{(0.095)(0.016)\} / \{(0.376)(0.04)^{1.67}(0.03)^{0.5}\}]^{0.375}$$

$$T = 1.83 \text{ m } (6.0 \text{ ft})$$ *(less than allowable so therefore proceed to next step)*

*Col. 12* — *Determine depth at curb, d, using equation 4-3.*

$$d = T S_x = (1.83)(0.04) = 0.073 \text{ m } (0.24 \text{ ft})$$ *(less than actual curb height so proceed to next step)*

*Step 15* — *Col. 15* — $W/T = 0.6 / 1.83 = 0.33$

*Step 16* — *Col. 16* — *Select a P 50 x 100 grate measuring 0.6 m wide by 0.9 m long (2 ft by 3 ft).*

**INLET SPACING COMPUTATION SHEET**

Date_____ SP_____ ROUTE_____
Computed By:_____ Sheet __ of____

| INLET | | GUTTER DISCHARGE Design Frequency_____ | | | | | GUTTER DISCHARGE Allowable Spread_____ | | | | | | | | INLET DISCHARGE | | | RMK |
|---|---|---|---|---|---|---|---|---|---|---|---|---|---|---|---|---|---|---|
| No. (1) | Stat. (2) | Drain. Area A (ha) (3) | Run-off Coeff. C (4) | Time of Conc. $t_c$ (min) (5) | Rain. Inten. I (mm/hr) (6) | $Q = CIA/K_c$ ($m^3/s$) (7) | Long. Slope $S_L$ (m/m) (8) | Cross Slope $S_x$ or $S_w$ (m/m) (9) | Prev. By-pass Flow ($m^3/s$) (10) | Total Gutter Flow ($m^3/s$) (11) | Depth d (m) (12) | Grate or Gutter Width W (m) (13) | Spread T (m) (14) | W/T (15) | Inlet Type (16) | Inter-cept Flow $Q_i$ ($m^3/s$) (17) | By-pass Flow $Q_b$ ($m^3/s$) (18) | (19) |
| | | | | | | | | | | | | | | | | | | |
| | | | | | | | | | | | | | | | | | | |
| | | | | | | | | | | | | | | | | | | |
| | | | | | | | | | | | | | | | | | | |
| | | | | | | | | | | | | | | | | | | |
| | | | | | | | | | | | | | | | | | | |
| | | | | | | | | | | | | | | | | | | |
| | | | | | | | | | | | | | | | | | | |
| | | | | | | | | | | | | | | | | | | |
| | | | | | | | | | | | | | | | | | | |
| | | | | | | | | | | | | | | | | | | |
| | | | | | | | | | | | | | | | | | | |
| | | | | | | | | | | | | | | | | | | |
| | | | | | | | | | | | | | | | | | | |
| | | | | | | | | | | | | | | | | | | |



Figure 4-20. Inlet spacing computation sheet for example 4-15.

*Step 17 Col. 17 Calculate intercepted flow, $Q_i$.*

$E_o = 1 - (1 - W/T)^{2.67}$ *(equation 4-16 or chart 2)*

$E_o = 1 - (1 - 0.33)^{2.67} = 0.66$

$V = 0.752/n\ S_L^{0.5}\ S_x^{0.67}\ T^{0.67}$ *(equation 4-13 or chart 4)*

$V = 0.752/(0.016)\ (0.03)^{0.5}\ (0.04)^{0.67}\ (1.83)^{0.67}$

$V = 1.41$ m/s (4.6 ft/s)

$R_f = 1.0$ *(chart 5)*

$R_s = 1 / [1 + (0.0828\ V^{1.8})/(S_x\ L^{2.3})]$ *(equation 4-19 or chart 6)*

$R_s = 1 / [1 + \{(0.0828)(1.41)^{1.8}\}/\{(0.04)(0.9)^{2.3}\}]$

$R_s = 0.17$

$Q_i = Q\ [R_f E_o + R_s\ (1 - E_o)]$ *(equation 4-21)*

$Q_i = (0.095)\ [(1.0)(0.66) + (0.17)(1 - 0.66)]$

$Q_i = 0.068$ m³/s (2.4 ft³/s)

*Step 18 Col. 18* $Q_b = Q - Q_i$

$= 0.095 - 0.068 = 0.027$ m³/s (1.0 ft³/s)

*Step 19 Col. 1 Inlet # 41*

*Col. 2 Station 18+90*

*Col. 3 Drainage area = (110 m)(13 m) = 1430 m² = 0.14 ha (0.35 ac)*

*Col. 4 Runoff coefficient, C = 0.73* *(table 3-1)*

*Step 20 Col. 5* $V = 1.1$ m/s (3.5 ft/s) *(step 8)*

$t_c = L/[60\ V] = 110/[(60)(1.1)] = 2$ min (use 5 min minimum) *(equation 3-6)*

*Step 21 Col. 6* $I = 180$ mm/hr *(figure 3-1)*

*Step 22 Col. 7* $Q = CIA/K_c$ *(equation 3-1)*

$Q = (0.73)(180)(0.14)/(360) = 0.051$ m³/s (1.8 ft³/s)

*Step 23 Col. 11* Col. 11 = Col. 10 + Col. 7 = 0.027 + 0.051 = 0.078 m³/s (2.8 ft³/s)

*Step 24 Col. 14* $T = 1.50$ m (4.9 ft) *(equation 4-2 or chart 1)*

$T < T$ allowable

*Col. 12* $d = 0.06$ m (0.20 ft)

$d <$ curb height

*Since the actual spread is less than the allowable spread, a larger invert spacing could be used here. However, in this case, maintenance considerations limit the spacing to 110 m (360 ft).*

*Step 25 Col. 16 Select P 50 x 100 grate 0.6 m wide by 0.9 m long (2 ft by 3 ft).*

*Step 26 Col. 17* $Q_i = 0.040$ m³/s (1.4 ft³/s) *(step 17)*

*Step 27* *Col. 18* $Q_b = Q - Q_i$

*Col. 18* = *Col. 11 - Col. 17*

*Col. 18* = *0.078 - 0.040* = *0.038 $m^3/s$ (1.3 $ft^3/s$)*

*Step 28* *Repeat steps 19 through 27 for each additional inlet.*

*A computer solution of this example is presented in appendix B.*

For inlet spacing in areas with changing grades, the spacing will vary as the grade changes. If the grade becomes flatter, inlets may be spaced at closer intervals because the spread will exceed the allowable. Conversely, for an increase in slope, the inlet spacing will become longer because of increased capacity in the gutter sections. Additionally, individual transportation agencies may have limitations for spacing due to maintenance constraints.

4.4.6.3 Flanking Inlets

As discussed in the previous section, inlets should always be located at the low or sag points in the gutter profile. In addition, it is good engineering practice to place flanking inlets on each side of the low point inlet when in a depressed area that has no outlet except through the system. This is illustrated in figure 4-21. The purpose of the flanking inlets is to act in relief of the inlet at the low point if it should become clogged or if the design spread is exceeded. Flanking inlets can be located so they will function before water spread exceeds the allowable spread at the sump location. The flanking inlets should be located so that they will receive all of the flow when the primary inlet at the bottom of the sag is clogged. They should do this without exceeding the allowable spread at the bottom of the sag. If the flanking inlets are the same dimension as the primary inlet, they will each intercept one-half the design flow when they are located so that the depth of ponding at the flanking inlets is 63 percent of the depth of ponding at the low point. If the flanker inlets are not the same size as the primary inlet, it will be necessary to either develop a new factor or do a trial and error solution using assumed depths with the weir equation to determine the capacity of the flanker inlet at the given depths.[18]

Table 4-7 shows the spacing required for various depth at curb criteria and vertical curve lengths defined by $K = L / (G_2 - G_1)$, where L is the length of the vertical curve in meters and $G_1$ and $G_2$ are the approach grades. The AASHTO policy on geometrics specifies maximum K values for various design speeds and a maximum K of 50 considering drainage. The use of table 4-7 is illustrated in example 4-16.

***Example 4-16***

***Given:*** *A 150 m (L) sag vertical curve at an underpass on a 4-lane divided highway with begin and end slopes of -2.5% and +2.5% respectively. The spread at design Q is not to exceed the shoulder width of 3.0 m (9.8 ft).*

$S_x = 0.02$

*Find:* *The location of the flanking inlets if located to function in relief of the inlet at the low point when the inlet at the low point is clogged.*

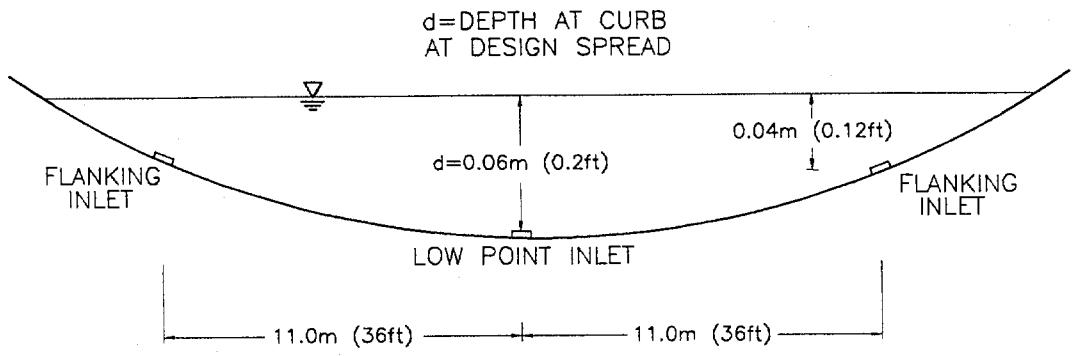


**Figure 4-21. Example of flanking inlets.**



***Solution:***

*Step 1. Find the rate of vertical culvature, K.*

$K = L/(S_{begin} - S_{end})$
$K = 150\ m/(-2.59-2.59)$
$K = 30\ m$

*Step 2. Determine depth at design spread.*

$d = S_x T = (0.02)(3.0)$
$d = 0.06\ m\ (0.2\ ft)$

*Step 3. Determine the depth for flanker locations.*

$d = 0.06\ (0.63) = 0.04\ m\ (0.12\ ft)$

*Step 4. For use with table 4-7; $d = 0.06 - 0.04 = 0.02\ m\ (0.06\ ft)$*

*Inlet spacing = 11.0 m (36 ft) from the sag point.*

Example problem solutions in section 4.4.5 illustrate the total interception capacity of inlets in sag locations. Except where inlets become clogged, spread on low gradient approaches to the low point is a more stringent criterion for design than the interception capacity of the sag inlet. AASHTO [21] recommends that a gradient of 0.3 percent be maintained within 15 m (50 ft) of the level point in order to provide for adequate drainage. It is considered advisable to use spread on the pavement at a gradient comparable to that recommended by the AASHTO Committee on Design to evaluate the location and design of inlets upgrade of sag vertical curves. Standard inlet locations may need to be adjusted to avoid excessive spread in the sag curve. Inlets may be needed between the flankers and the ends of the curves also. For major sag points, the flanking inlets are added as a safety factor, and are not considered as intercepting flow to reduce the bypass flow to the sag point. They are installed to assist the sag point inlet in the event of clogging.

**Table 4-7. Distance to flanking inlets in sag vertical curve using depth at curb criteria.** [19]

| d (m) | K (m) | 4 | 8 | 11 | 15 | 20 | 25 | 30 | 37 | 43 | 50 |
|---|---|---|---|---|---|---|---|---|---|---|---|
| 0.01 | | 2.8 | 4.0 | 4.7 | 5.5 | 6.3 | 7.1 | 7.7 | 8.6 | 9.3 | 10.0 |
| 0.02 | | 4.0 | 5.7 | 6.6 | 7.7 | 8.9 | 10.0 | 11.0 | 12.2 | 13.1 | 14.1 |
| 0.03 | | 4.9 | 7.0 | 8.2 | 9.6 | 11.0 | 12.3 | 13.5 | 15.0 | 16.2 | 17.5 |
| 0.06 | | 7.0 | 9.9 | 11.6 | 13.5 | 15.6 | 17.5 | 19.1 | 21.2 | 22.9 | 24.7 |
| 0.09 | | 8.6 | 12.1 | 14.2 | 16.6 | 19.1 | 21.4 | 23.4 | 26.0 | 28.0 | 30.2 |
| 0.12 | | 9.9 | 14.0 | 16.4 | 19.1 | 22.1 | 24.7 | 27.1 | 30.0 | 32.4 | 34.9 |
| 0.15 | | 11.0 | 15.6 | 18.3 | 21.4 | 24.7 | 27.6 | 30.2 | 33.6 | 36.2 | 39.0 |
| 0.18 | | 12.1 | 17.1 | 20.1 | 23.4 | 27.1 | 30.2 | 33.1 | 36.8 | 39.7 | 42.8 |
| 0.21 | | 13.1 | 18.5 | 21.7 | 25.3 | 29.2 | 32.7 | 35.8 | 39.7 | 42.8 | 46.2 |
| 0.24 | | 14.0 | 19.8 | 23.2 | 27.1 | 31.2 | 34.9 | 38.3 | 42.5 | 45.8 | 49.4 |

NOTES:
1. $x = (200\ dK)^{0.5}$, where x = distance from sag point.
2. d = depth at curb in meters (does not include sump depth).
3. Drainage maximum K = 50



### 4.4.7 Median, Embankment, and Bridge Inlets

Flow in median and roadside ditches is discussed briefly in chapter 5 and in Hydraulic Engineering Circular No. 15 [34] and Hydraulic Design Series No. 4 [7]. It is sometimes necessary to place inlets in medians at intervals to remove water that could cause erosion. Inlets are sometimes used in roadside ditches at the intersection of cut and fill slopes to prevent erosion downstream of cut sections.

Where adequate vegetative cover can be established on embankment slopes to prevent erosion, it is preferable to allow storm water to discharge down the slope with as little concentration of flow as practicable. Where storm water must be collected with curbs or swales, inlets are used to receive the water and discharge it through chutes, sod or riprap swales, or pipe downdrains.

Bridge deck drainage is similar to roadway drainage and deck drainage inlets are similar in purpose to roadway inlets. Bridge deck drainage is discussed in reference 23.

#### 4.4.7.1 Median and Roadside Ditch Inlets

Median and roadside ditches may be drained by drop inlets similar to those used for pavement drainage, by pipe culverts under one roadway, or by cross drainage culverts which are not continuous across the median. Figure 4-22 illustrates a traffic-safe median inlet. Inlets, pipes, and discontinuous cross drainage culverts should be designed so as not to detract from a safe roadside. Drop inlets should be flush with the ditch bottom and traffic-safe bar grates should be placed on the ends of pipes used to drain medians that would be a hazard to errant vehicles, although this may cause a plugging potential. Cross drainage structures should be continuous across the median unless the median width makes this impractical. Ditches tend to erode at drop inlets; paving around the inlets helps to prevent erosion and

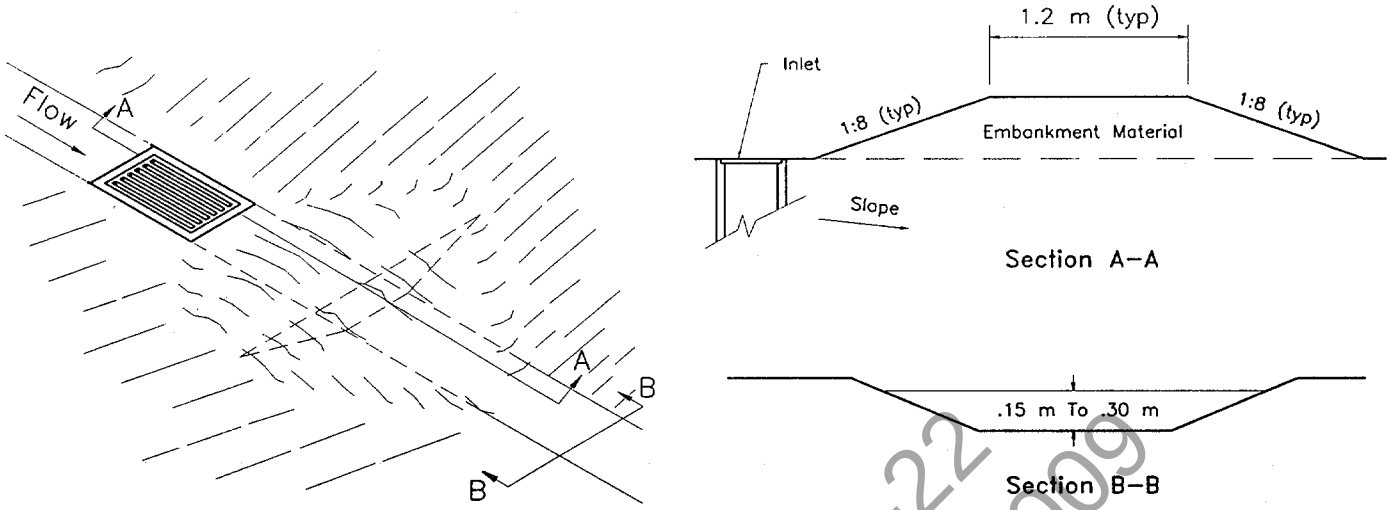


**Figure 4-22. Median drop inlet.**[85]

may increase the interception capacity of the inlet marginally by acceleration of the flow.

Pipe drains for medians operate as culverts and generally require more water depth to intercept median flow than drop inlets. No test results are available on which to base design procedures for estimating the effects of placing grates on culvert inlets. However, little effect is expected.

The interception capacity of drop inlets in median ditches on continuous grades can be estimated by use of charts 14 and 15 to estimate flow depth and the ratio of frontal flow to total flow in the ditch.

Chart 14 is the solution to the Manning equation for channels of various side slopes. The Manning equation for open channels is:

$$Q = \frac{K_M}{n} A R^{0.67} S_L^{0.5} \tag{4-36}$$

where:
- $Q$ = discharge rate, $m^3/s$ ($ft^3/s$)
- $K_M$ = 1.0 (1.486)
- $n$ = hydraulic resistance variable
- $A$ = cross sectional area of flow, $m^2$ ($ft^2$)
- $R$ = hydraulic radius = area/wetted perimeter, m (ft)
- $S_L$ = bed slope, m/m (ft/ft)

For the trapezoidal channel cross section shown on chart 14, the Manning equation becomes:

$$Q = \frac{K_M}{n}(B + zd^2)\left(\frac{B + zd^2}{B + 2d\sqrt{z^2 + 1}}\right)^{0.67} S_L^{0.5} \qquad (4\text{-}37)$$

where: B = bottom width, m (ft)
z = horizontal distance of side slope to a rise of 1 m (ft) vertical, m (ft)

Equation 4-37 is a trial and error solution to chart 14.

Chart 15 is the ratio of frontal flow to total flow in a trapezoidal channel. This is expressed as:

$$E_o = W / (B + dz) \qquad (4\text{-}38)$$

Charts 5 and 6 are used to estimate the ratios of frontal and side flow intercepted by the grate to total flow.

Small dikes downstream of drop inlets (figure 4-22) can be provided to impede bypass flow in an attempt to cause complete interception of the approach flow. The dikes usually need not be more than a few inches high and should have traffic safe slopes. The height of dike required for complete interception on continuous grades or the depth of ponding in sag vertical curves can be computed by use of chart 9. The effective perimeter of a grate in an open channel with a dike should be taken as 2(L + W) since one side of the grate is not adjacent to a curb. Use of chart 9 is illustrated in section 4.4.4.1.

The following examples illustrate the use of charts 14 and 15 for drop inlets in ditches on continuous grade.

***Example 4-17***

***Given:*** *A median ditch with the following characteristics:*

*B = 1.2 m (3.9 ft)*
*n = 0.03*
*z = 6*
*S = 0.02*
*The flow in the median ditch is to be intercepted by a drop inlet with a 0.6 m by 0.6 m (2 ft by 2 ft) P-50 parallel bar grate; there is no dike downstream of the inlet.*

*Q = 0.28 $m^3/s$ (9.9 $ft^3/s$)*

***Find:*** *The intercepted and bypassed flows ($Q_i$ and $Q_b$)*

***Solution:***

*Step 1. Compute the ratio of frontal to total flow in trapezoidal channel.*

*Qn = (0.28)(0.03)*
*Qn = 0.0084 $m^3/s$ (0.30 $ft^3/s$)*
*d/B = 0.12* *chart 14*
*d = (B)(d/B) = (0.12)(1.20) = 0.14 m (0.46 ft)*

$E_o = W/(B + dz)$ *equation 4-38 or chart 15*
$= (0.6)/[1.2 + (0.14)(6)] = 0.30$

*Step 2. Compute frontal flow efficiency*

$V = Q/A$
$A = (0.14)[(6)(.14) + 1.2)$
$A = 0.29\ m^2\ (3.1\ ft^2)$
$V = (0.28)/(0.29) = 0.97\ m/s\ (3.2\ ft/s)$

$R_f = 1.0$ *chart 5*

*Step 3. Compute side flow efficiency*

*Since the ditch bottom is wider than the grate and has no cross slope, use the least cross slope available on chart 6 or use equation 4-19 to solve for $R_s$.*

$R_s = 1/[1 + (0.0828\ V^{1.8})/(S_x\ L^{2.3})]$ *equation 4-19 or chart 6*
$R_s = 1/[1 + (0.0828)(0.97)^{1.8} / \{(0.01)\ (0.6)^{2.3}\}] = 0.04$

*Step 4. Compute total efficiency.*

$E = E_o\ R_f + R_s\ (1 - E_o)$
$E = (0.30)(1.0) + (0.04)(1 - 0.30) = 0.33$

*Step 5. Compute interception and bypass flow.*

$Q_i = E\ Q = (0.33)(0.28)$
$Q_i = 0.1\ m^3/s\ (3.5\ ft^3/s)$

$Q_b = Q - Q_i = (0.28) - (0.1)$
$Q_b = 0.18\ m^3/s\ (6.4\ ft^3/s)$

In the above example, a P-50 inlet would intercept about 30 percent of the flow in a 1.2 m (4 ft) bottom ditch on continuous grade.

For grate widths equal to the bottom width of the ditch, use chart 6 by substituting ditch side slopes for values of $S_x$, as illustrated in example 4-18.

***Example 4-18***

***Given:*** *A median ditch with the following characteristics:*

$Q = 0.28\ m^3/s\ (9.9\ ft^3/s)$
$B = 0.6\ m\ (2\ ft)$
$W = 0.6\ m\ (2\ ft)$
$n = 0.03$
$z = 6;\ S_x = 1/6 = 0.17$
$S = 0.03$

*The flow in the median ditch is to be intercepted by a drop inlet with a 0.6 m by 0.6 m (2 ft by 2 ft) P-50 parallel bar grate; there is no dike downstream of the inlet.*

***Find:*** *The intercepted and bypassed flows ($Q_i$ and $Q_b$).*

***Solution:***

*Step 1. Compute ratio of frontal to total flow in trapezoidal channel.*

$Qn = (0.28)(0.03)$
$Qn = 0.0084\ m^3/s\ (0.30\ ft^3/s)$

$d/B = 0.25$ — *chart 14*

$d = (0.25)(0.6) = 0.15\ m\ (0.49\ ft)$

$E_o = W / (B + dz)$ — *equation 4-38 or chart 15*
$= (0.6) / [\ 0.6 + (0.15)(6)] = 0.40$

*Step 2. Compute frontal flow efficiency*

$V = Q/A$
$A = (0.15)[(6)(.15) + 0.6)]$
$A = 0.23\ m^2\ (2.42\ ft^2)$
$V = (0.28)/(O.23) = 1.22\ m/s\ (4.0\ ft/s)$

$R_f = 1.0$ — *chart 5*

*Step 3. Compute side flow efficiency*

$R_s = 1/[1 + (0.0828\ V^{1.8})/(S_x\ L^{2.3})]$ — *equation 4-19 or chart 6*
$R_s = 1/[1 + (0.0828)(1.22)^{1.8} / \{(0.17)\ (0.6)^{2.3}\}] = 0.30$

*Step 4. Compute total efficiency.*

$E = E_o\ R_f + R_s\ (1 - E_o)$
$E = (0.40)(1.0) + (0.30)(1-0.40) = 0.58$

*Step 5. Compute interception and bypass flow.*

$Q_i = E\ Q = (0.58)(0.28)$
$Q_i = 0.16\ m^3/s\ (5.7\ ft^3/s)$

$Q_b = Q - Qi = 0.28 - 0.16$
$Q_b = 0.12\ m^3/s\ (4.2\ ft^3/s)$

*A computer solution of this example is presented in appendix B.*

The height of dike downstream of a drop inlet required for total interception is illustrated by example 4-19.

***Example 4-19***

***Given:*** *Data from example 4-18.*

***Find:*** *The required height of a berm to be located downstream of the grate inlet to cause total interception of the ditch flow.*

***Solution:***

$$P = 2(L + W)$$
$$P = 2(0.6 + 0.6) = 2.4 \text{ m } (7.9 \text{ ft})$$

$$d = [Q_i / (C_w P)]^{0.67} \qquad \text{equation 4-26 or chart 9}$$
$$d = [(0.28) / \{(1.66)(2.4)\}]^{0.67} = 0.17 \text{ m } (.55 \text{ ft})$$

*A dike will need to have a minimum height of 0.16 m (0.5 ft) for total interception. Due to the initial velocity of the water which may provide adequate momentum to carry the flow over the dike, an additional 0.15 m (0.5 ft) may be added to the height of the dike to insure complete interception of the flow.*

4.4.7.2 Embankment Inlets

Drainage inlets are often needed to collect runoff from pavements in order to prevent erosion of fill slopes or to intercept water upgrade or downgrade of bridges. Inlets used at these locations differ from other pavement drainage inlets in three respects. First, the economies which can be achieved by system design are often not possible because a series of inlets is not used; second, total or near total interception is sometimes necessary in order to limit the bypass flow from running onto a bridge deck; and third, a closed storm drainage system is often not available to dispose of the intercepted flow, and the means for disposal must be provided at each inlet. Intercepted flow is usually discharged into open chutes or pipe downdrains which terminate at the toe of the fill slope.

Example problem solutions in other sections of this circular illustrate by inference the difficulty in providing for near total interception on grade. Grate inlets intercept little more than the flow conveyed by the gutter width occupied by the grate. Combination curb-opening and grate inlets can be designed to intercept total flow if the length of curb opening upstream of the grate is sufficient to reduce spread in the gutter to the width of the grate used. Depressing the curb opening would significantly reduce the length of inlet required. Perhaps the most practical inlets or procedure for use where near total interception is necessary are sweeper inlets, increase in grate width, and slotted inlets of sufficient length to intercept 85-100 percent of the gutter flow. Design charts and procedures in section 4.4.4 are applicable to the design of inlets on embankments. Figure 4-23 illustrates a combination inlet and downdrain.

Downdrains or chutes used to convey intercepted flow from inlets to the toe of the fill slope may be open or closed chutes. Pipe downdrains are preferable because the flow is confined and cannot cause erosion along the sides. Pipes can be covered to reduce or eliminate interference with maintenance operations on the fill slopes. Open chutes are often damaged by erosion from water splashing over the sides of the chute due to oscillation in the flow and from spill over the sides at bends in the chute. Erosion at the ends of downdrains or chutes can be a problem if not anticipated. The end of the device

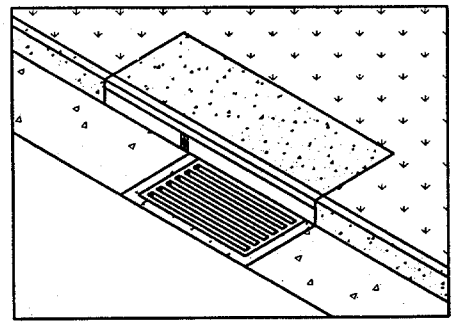

a. Perspective

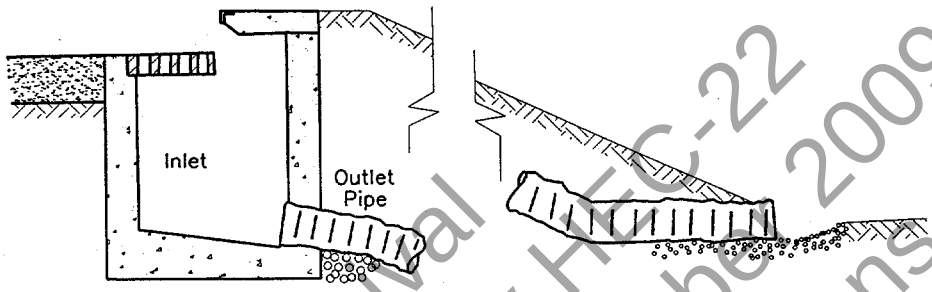


b. Section

**Figure 4-23. Embankment inlet and downdrain.**

may be placed low enough to prevent damage by undercutting due to erosion. Well-graded gravel or rock can be used to control the potential for erosion at the outlet of the structure. However, some transportation agencies install an elbow or a "tee" at the end of the downdrains to re-direct the flow and prevent erosion. See HEC-14[35] for additional information on energy dissipator designs.

## 4.5 GRATE TYPE SELECTION CONSIDERATIONS

Grate type selection should consider such factors as hydraulic efficiency, debris handling characteristics, pedestrian and bicycle safety, and loading conditions. Relative costs will also influence grate type selection.

Charts 5, 6, and 9 illustrate the relative hydraulic efficiencies of the various grate types discussed here. The parallel bar grate (P-50) is hydraulically superior to all others but is not considered bicycle safe. The curved vane and the P-30 grates have good hydraulic characteristics with high velocity flows. The other grates tested are hydraulically effective at lower velocities.

Debris-handling capabilities of various grates are reflected in table 4-5. The table shows a clear difference in efficiency between the grates with the 83 mm (3-1/4 inch) longitudinal bar spacing and those with smaller spacings. The efficiencies shown in the table are suitable for comparisons between the grate designs tested, but should not be taken as an indication of field performance since the testing procedure used did not simulate actual field conditions. Some local transportation agencies have developed factors for use of debris handling characteristics with specific inlet configurations.

Table 4-8 ranks the grates according to relative bicycle and pedestrian safety. The bicycle safety ratings were based on a subjective test program as described in reference 30. However, all the grates are considered bicycle and pedestrian safe except the P-50.

Grate loading conditions must also be considered when determining an appropriate grate type. Grates in traffic areas must be able to withstand traffic loads; conversely, grates draining yard areas do not generally need to be as rigid.

**Table 4-8. Ranking with respect to bicycle and pedestrian safety.** [26]

| Rank | Grate Style |
|---|---|
| 1 | P-50x100 |
| 2 | Reticuline |
| 3 | P-30 |
| 4 | 45° - 85 Tilt Bar |
| 5 | 45° - 60 Tilt Bar |
| 6 | Curved Vane |
| 7 | 30° - 85 Tilt Bar |

# 5. ROADSIDE AND MEDIAN CHANNELS

Roadside and median channels are open-channel systems which collect and convey stormwater from the pavement surface, roadside, and median areas. These channels may outlet to a storm drain piping system via a drop inlet, to a detention or retention basin or other storage component, or to an outfall channel. Roadside and median channels are normally trapezoidal in cross section and are lined with grass or other protective lining.

This chapter presents design concepts and relationships for the design of roadside and median channels.

## 5.1 OPEN CHANNEL FLOW

The design and/or analysis of roadside and median channels follows the basic principles of open channel flow. Summaries of several important open channel flow concepts and relationships are presented in the following sections. A more complete coverage of open channel flow concepts can be found in references 31 and 32.

### 5.1.1 Energy

Conservation of energy is a basic principal in open channel flow. As shown in figure 5-1, the total energy at a given location in an open channel is expressed as the sum of the potential energy head (elevation), pressure head, and kinetic energy head (velocity head). The total energy at given channel cross section can be represented as

$$E_t = Z + y + \frac{V^2}{2g} \tag{5-1}$$

where: $E_t$ = total energy, m (ft)
$Z$ = elevation above a given datum, m (ft)
$y$ = flow depth, m (ft)
$V$ = mean velocity, m/s (ft/s)
$g$ = gravitational acceleration, 9.8 m/s$^2$ (32.2 ft/s$^2$)

Written between an upstream cross section designated 1 and a downstream cross section designated 2, the energy equation becomes

$$Z_1 + y_1 + \frac{V_1^2}{2g} = Z_2 + y_2 + \frac{V_2^2}{2g} + h_L \tag{5-2}$$

where: $h_L$ = head or energy loss between section 1 and 2, m (ft)

The terms in the energy equation are illustrated in figure 5-1. The energy equation states that the total energy head at an upstream cross section is equal to the total energy head at a downstream section plus the energy head loss between the two sections.

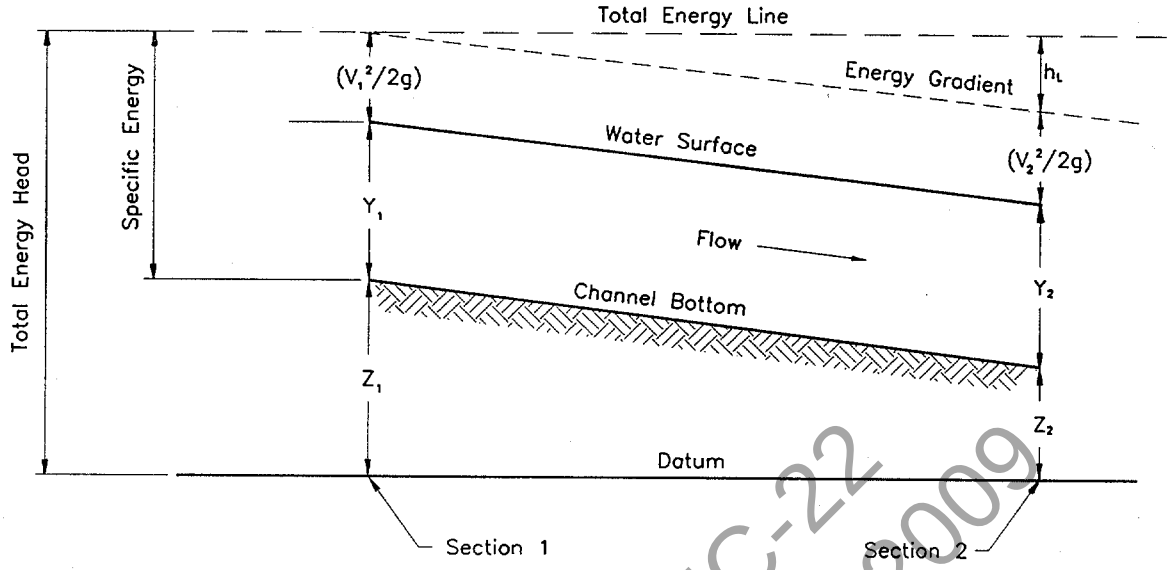


**Figure 5-1. Total energy in open channels.**



### 5.1.2 Specific Energy

Specific Energy, E, is defined as the energy head relative to the channel bottom. It is the sum of the depth and velocity head:

$$E = y + \frac{V^2}{2g} \tag{5-3}$$

### 5.1.3 Flow Classification

Open channel flow is generally classified using the following characteristics:

- Steady or unsteady
- Uniform or varied
- Subcritical or supercritical

A **steady flow** is one in which the discharge passing a given cross-section remains constant in time. When the discharge varies in time, the flow is **unsteady**. A **uniform flow** is one in which the flow rate and depth remain constant along the length of the channel. When the flow rate and depth vary along the channel, the flow is considered **varied.**

Most natural flow conditions are neither steady nor uniform. However, in some cases it can be assumed that the flow will vary gradually in time and space, and can be described as steady, uniform flow for short periods and distances. Gradually-varied flows are nonuniform flows in which the depth and velocity change gradually enough in the flow direction that vertical accelerations can be neglected.

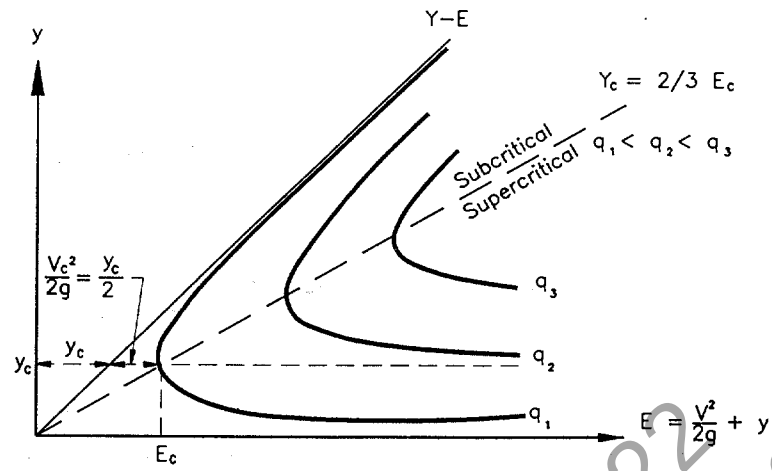


**Figure 5-2. Specific energy diagram.**

**Subcritical flow** is distinguished from **supercritical flow** by a dimensionless number called the Froude number ($F_r$), which represents the ratio of inertial forces to gravitational forces and is defined for rectangular channels by the following equation:

$$F_r = \frac{V}{(g\ y)^{0.5}} \tag{5-4}$$

where: V = mean velocity, m/s (ft/s)
g = acceleration of gravity, 9.8 m/s$^2$ (32.2 ft/s$^2$)
y = flow depth, m (ft)

**Critical flow** occurs when the Froude number has a value of one (1.0). The flow depth at critical flow is referred to as critical depth. This flow depth represents the minimum specific energy for a given discharge. Critical depth is also the depth of maximum discharge when the specific energy is held constant. These relationships are illustrated in figure 5-2.

**Subcritical flow** occurs when the Froude number is less than one ($F_r < 1$). In this state of flow, depths greater than critical depth occur (refer to figure 5-2), small water surface disturbances travel both upstream and downstream, and the control for the flow depth is always located downstream. The control is a structure or obstruction in the channel which affects the depth of flow. Subcritical flow can be characterized by slower velocities, deeper depths and mild slopes while supercritical flow is represented by faster velocities, shallower depths and steeper slopes. **Supercritical flow** occurs when the Froude number is greater than one ($F_r > 1$). In this state of flow, depths less than critical depth occur (refer to figure 5-2), small water surface disturbances are always swept downstream, and the location of the flow control is always upstream. Most natural open channel flows are subcritical or near critical in nature. However, supercritical flows are not uncommon for smooth-lined ditches on steep grades.

It is important that the Froude number be evaluated in open channel flows to determine how close a particular flow is to the critical condition. As illustrated in figure 5-2 and discussed in the next section, significant changes in depth and velocity can occur as flow passes from subcritical to supercritical. When the Froude number is close to one (1.0) small flow disturbances can initiate a change in the flow state.

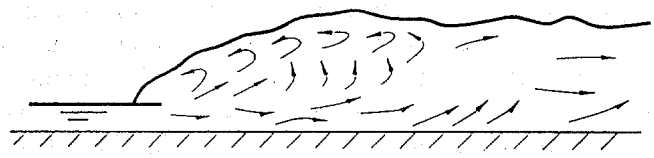

**Figure 5-3. Hydraulic jump.**

These possible changes and any resulting impacts on flow depth or channel stability must be considered during design.

### 5.1.4 Hydraulic Jump

A hydraulic jump occurs as an abrupt transition from supercritical to subcritical flow. There are significant changes in depth and velocity in the jump and energy is dissipated. Figure 5-3 illustrates a hydraulic jump.

As discussed above, the potential for a hydraulic jump to occur should be considered in all cases where the Froude number is close to one (1.0) and/or where the slope of the channel bottom changes abruptly from steep to mild. The characteristics and analysis of hydraulic jumps are covered in detail in references 31 and 35.

### 5.1.5 Flow Resistance

The depth of flow in a channel of given geometry and longitudinal slope is primarily a function of the channel's resistance to flow or roughness. This depth is called the normal depth and is computed from Manning's equation. The general form of Manning's equation is as follows:

$$Q = \frac{K_n A R^{0.67} S_o^{0.5}}{n} \tag{5-5}$$

where:
- $K_n$ = 1.0 (1.486)
- $Q$ = discharge rate, $m^3/s$ ($ft^3/s$)
- $A$ = cross sectional flow area, $m^2$ ($ft^2$)
- $R$ = hydraulic radius, m (ft)
- $R$ = A/P , m (ft)
- $P$ = wetted perimeter, m (ft)
- $S_o$ = energy grade line slope, m/m (ft/ft)
- $n$ = Manning's roughness coefficient

Nomograph solutions to Manning's equation for triangular and trapezoidal channels are presented in charts 1 and 14 respectively.

The selection of an appropriate Manning's n value for design purposes is often based on observation and experience. Manning's n values are also known to vary with flow depth. Table 5-1 provides a tabulation of Manning's n values for various channel lining materials. Manning's roughness coefficient for vegetative and other linings vary significantly depending on the amount of submergence. Chart 16 shows the variation of Manning's n value for selected lining types. The development and use of this and other charts is outlined in detail in reference 34. The classification of vegetal covers by degree of retardance is provided in table 5-2. Table 5-3 provides a list of Manning's n relationships for five classes of vegetation defined by their degree of retardance.

***Example 5-1***

***Given:*** *A trapezoidal channel (as shown in figure 5-6) with the following characteristics:*

$S_o = 0.01$
$B = 0.8\ m\ (2.6\ ft)$
$z = 3$
$d = 0.5\ m\ (1.6\ ft)$

***Find:*** *The channel capacity and flow velocity for the following channel linings:*

(1) *riprap with median aggregate diameter, $D_{50}$ = 150 mm (6 in)*
(2) *a good stand of buffalo grass, uncut, 80 to 150 mm (3 to 6 in).*

***Solution 1:*** *riprap*

*Step 1. Determine the channel parameters*

$n = 0.069$ *table 5-1*

$$A = Bd + 2(1/2)(d)(zd) = Bd + zd^2$$
$$= (0.8)(0.5) + (3)(0.5)^2$$
$$= 1.15\ m^2\ (12.4\ ft^2)$$

$$P = B + 2[(zd)^2 + d^2)]^{1/2} = B + 2d(z^2+1)^{0.5}$$
$$= (0.8) + (2)(0.5)(3^2+1)^{0.5}$$
$$= 3.96\ m\ (13.0\ ft)$$

$$R = A/P$$
$$= 1.15/3.96$$
$$= 0.29\ m\ (0.95\ ft)$$

**Table 5-1. Manning's roughness coefficients. ****

| Lining Category | Lining Type | n - Value for Given Depth Ranges | | |
|---|---|---|---|---|
| | | 0-0.15 m (0-0.5 ft) | 0.15-0.60 m (0.5-2.0 ft) | >0.60 m (>2.0 ft) |
| Rigid | Concrete | 0.015 | 0.013 | 0.013 |
| | Grouted Riprap | 0.040 | 0.030 | 0.028 |
| | Stone Masonry | 0.042 | 0.032 | 0.030 |
| | Soil Cement | 0.025 | 0.022 | 0.020 |
| | Asphalt | 0.018 | 0.016 | 0.016 |
| Unlined | Bare Soil | 0.023 | 0.020 | 0.020 |
| | Rock Cut | 0.045 | 0.035 | 0.025 |
| Temporary* | Woven Paper Net | 0.016 | 0.015 | 0.015 |
| | Jute Net | 0.028 | 0.022 | 0.019 |
| | Fiberglass Roving | 0.028 | 0.021 | 0.019 |
| | Straw with Net | 0.065 | 0.033 | 0.025 |
| | Curled Wood Mat | 0.066 | 0.035 | 0.028 |
| | Synthetic Mat | 0.036 | 0.025 | 0.021 |
| Gravel Riprap | 25 mm (1 in) $D_{50}$ | 0.044 | 0.033 | 0.030 |
| | 50 mm (2 in) $D_{50}$ | 0.066 | 0.041 | 0.034 |
| Rock Riprap | 150 mm (6 in) $D_{50}$ | 0.104 | 0.069 | 0.035 |
| | 300 mm (12 in) $D_{50}$ | -- | 0.078 | 0.040 |

NOTE: Values listed are representative values for the respective depth ranges. Manning's roughness coefficients, n, vary with the flow depth.

* Some "temporary" linings become permanent when buried.

** Table reproduced from HEC-15 [34]

**Table 5-2. Classification of vegetal covers as to degree of retardance. ****

| Retardance Class | Cover | Condition |
|---|---|---|
| A | Weeping lovegrass | Excellent stand, tall, average 0.76 m (2.5 ft) |
| | Yellow bluestem Ischaemum | Excellent stand, tall, average 0.91 m (3.0 ft) |
| B | Kudzu | Very dense growth, uncut |
| | Bermuda grass | Good stand, tall, average 0.30 m (1.0 ft) |
| | Native grass mixture (little bluestem, bluestem, blue gamma, and other long and short midwest grasses) | Good stand, unmowed |
| | Weeping lovegrass | Good stand, tall, average 0.61 m (2.0 ft) |
| | Lespedeza sericea | Good stand, not woody, tall, average 0.48 m (1.6 ft) |
| | Alfalfa | Good stand, uncut, average 0.28 m (0.91 ft) |
| | Weeping lovegrass | Good stand, unmowed, average 0.33 m (1.1 ft) |
| | Kudzu | Dense growth, uncut |
| | Blue gamma | Good stand, uncut, average 0.33 m (1.1 ft) |
| C | Crabgrass | Fair stand, uncut, avg. 0.25 to 1.20 m (0.8 to 4.0 ft) |
| | Bermuda grass | Good stand, mowed, average 0.15 m (0.5 ft) |
| | Common lespedeza | Good stand, uncut, average 0.28 m (0.91 ft) |
| | Grass-legume mixture-- summer (orchard grass, redtop Italian ryegrass, and common lespedeza) | Good stand, uncut, average 0.15 to 0.20 m (0.5 to 1.5 ft) |
| | Centipedegrass | Very dense cover, average 0.15 m (0.5 ft) |
| | Kentucky bluegrass | Good stand, headed, avg. 0.15 to 0.30 m (0.5 to 1.0 ft) |
| D | Bermuda grass | Good stand, cut to 0.06 m (0.2 ft) |
| | Common lespedeza | Excellent stand, uncut, average 0.11 m (0.4 ft) |
| | Buffalo grass | Good stand, uncut, avg. .08 to 0.15 m (0.3 to 0.5 ft) |
| | Grass-legume mixture-- fall, spring (orchard grass, redtop, Italian ryegrass, and common lespedeza) | Good stand, uncut, 0.10 to 0.13 m (0.3 to 0.4 ft) |
| | Lespedeza sericea | After cutting to 0.05 m (0.2 ft) height, Very good stand before cutting |
| E | Bermuda grass | Good stand, cut to average 0.04 m (0.1 ft) |
| | Bermuda grass | Burned stubble |

NOTE: Covers classified have been tested in experimental channels. Covers were green and generally uniform.

** Reproduced from HEC-15 [34]

**Table 5-3. Manning's n relationships for vegetal degree of retardance.** [34]

| Retardance Class | Manning's n Equation* | |
|---|---|---|
| A | $1.22\ R^{1/6} / [30.2 + 19.97 \log (R^{1.4}\ S_o^{0.4})]$ | (5-6) |
| B | $1.22\ R^{1/6} / [37.4 + 19.97 \log (R^{1.4}\ S_o^{0.4})]$ | (5-7) |
| C | $1.22\ R^{1/6} / [44.6 + 19.97 \log (R^{1.4}\ S_o^{0.4})]$ | (5-8) |
| D | $1.22\ R^{1/6} / [49.0 + 19.97 \log (R^{1.4}\ S_o^{0.4})]$ | (5-9) |
| E | $1.22\ R^{1/6} / [52.1 + 19.97 \log (R^{1.4}\ S_o^{0.4})]$ | (5-10) |

* Equations are valid for flows less than 1.42 $m^3/s$ (50 $ft^3/s$).
Nomograph solutions for these equations are contained in reference 34.



*Step 2. Compute the flow capacity using equation 5-5.*

$$Qn = K_n\ A\ R^{0.67}\ S_o^{0.5}$$
$$= (1.0)(1.15)(0.29)^{0.67}(0.01)^{0.5}$$
$$= 0.05\ m^3/s\ (1.8\ ft^3/s)$$

$$Q = Qn / n = 0.05/0.069$$
$$= 0.72\ m^3/s\ (25.6\ ft^3/s)$$

*Step 3. Compute the flow velocity*

$$V = Q/A$$
$$= 0.72/1.15$$
$$= 0.63\ m/s\ (2.1\ ft/s)$$

***Solution 1a :*** *Alternately use chart 14 with*

$$d/B = 0.5/0.8 = 0.63$$
$$Qn = 0.05\ m^3/s\ (1.8\ ft^3/s)$$
$$Q = Qn / n = 0.05/0.069$$
$$= 0.72\ m^3/s\ (25.6\ ft^3/s)$$

$$V = Q/A = 0.72/1.15$$
$$= 0.63\ m/s\ (2.1\ ft/s)$$

***Solution 2:*** *Buffalo Grass*

*Step 1. Determine roughness*

*Degree of Retardance : Retardance Class D* *table 5-2*

*R = 0.29 m (0.95 ft)* *part 1*

*Roughness coefficient, n, from table 5-3*

$$n = \frac{1.22\ R^{0.167}}{49.0 + 19.97 \mathrm{Log}[(R)^{1.4}\ (S_o)^{0.4}]} \qquad \text{(equation 5-9)}$$

$$n = \frac{1.22\,(0.29)^{0.167}}{49.0 + 19.97\ \log[(0.29)^{1.4}\ (0.01)^{0.4}]}$$

*n = 0.055*

*Step 2. Compute flow capacity*

*Qn = 0.05 m³/s (1.8 ft³/s)* *from solution 1*

*Q = Qn / n = 0.05/0.055*
*= 0.91 m³/s (32.1 ft³/s)*

*Step 3. Compute flow velocity*

*V = Q/A = 0.91/1.15*
*= 0.79 m/s (2.6 ft/s)*

*A computer solution for both parts of this example is presented in appendix B.*



### 5.1.6 Flow in Bends

Flow around a bend in an open channel induces centrifugal forces because of the change in flow direction [31]. This results in a superelevation of the water surface at the outside of bends and can cause the flow to splash over the side of the channel if adequate freeboard is not provided. This superelevation can be estimated by the following equation.

$$\Delta d = \frac{V^2\ T}{g\ R_c} \qquad (5\text{-}11)$$

where:
- $\Delta d$ = difference in water surface elevation between the inner and outer banks of the channel in the bend, m (ft)
- $V$ = average velocity, m/s (ft/s)
- $T$ = surface width of the channel, m (ft)
- $g$ = gravitational acceleration, 9.8 m/s² (32.2 ft/s²)
- $R_c$ = radius to the centerline of the channel, m (ft)

Equation 5-11 is valid for subcritical flow conditions. The elevation of the water surface at the outer channel bank will be $\Delta d/2$ higher than the centerline water surface elevation (the average water surface elevation immediately before the bend) and the elevation of the water surface at the inner channel bank will be $\Delta d/2$ lower than the centerline water surface elevation. Flow around a channel bend imposes higher shear stress on the channel bottom and banks. The nature of the shear stress induced by a bend is discussed in more detail in section 5.1.7. The increased stress requires additional design considerations

within and downstream of the bend.

### 5.1.7 Stable Channel Design

HEC-15 [34] provides a detailed presentation of stable channel design concepts related to the design of roadside and median channels. This section provides a brief summary of significant concepts.

Stable channel design concepts provide a means of evaluating and defining channel configurations that will perform within acceptable limits of stability. For most highway drainage channels, bank instability and lateral migration can not be tolerated. Stability is achieved when the material forming the channel boundary effectively resists the erosive forces of the flow. Principles of rigid boundary hydraulics can be applied to evaluate this type of system.

Both velocity and tractive force methods have been applied to the determination of channel stability. Permissible velocity procedures are empirical in nature, and have been used to design numerous channels in the United States and throughout the world. However, tractive force methods consider actual physical processes occurring at the channel boundary and represent a more realistic model of the detachment and erosion processes.

The hydrodynamic force created by water flowing in a channel causes a shear stress on the channel bottom. The bed material, in turn, resists this shear stress by developing a tractive force. Tractive force theory states that the flow-induced shear stress should not produce a force greater than the tractive resisting force of the bed material. This tractive resisting force of the bed material creates the permissible or critical shear stress of the bed material. In a uniform flow, the shear stress is equal to the effective component of the gravitational force acting on the body of water parallel to the channel bottom. The average shear stress is equal to:

$$\tau = \gamma R S \tag{5-12}$$

where: $\tau$ = average shear stress, Pa (lb/ft$^2$)
$\gamma$ = unit weight of water, 9810 N/m$^3$ (62.4 lb/ft$^3$) (at 15.6 °C (60 °F))
R = hydraulic radius, m (ft)
S = average bed slope or energy slope, m/m (ft/ft)

The maximum shear stress for a straight channel occurs on the channel bed [31] and is less than or equal to the shear stress at maximum depth. The maximum shear stress is computed as follows:

$$\tau_d = \gamma d S \tag{5-13}$$

where: $\tau_d$ = maximum shear stress, Pa (lb/ft$^2$)
d = maximum depth of flow, m (ft)

Shear stress in channels is not uniformly distributed along the wetted perimeter of a channel. A typical distribution of shear stress in a trapezoidal channel tends toward zero at the corners with a maximum on the bed of the channel at its centerline, and the maximum for the side slopes occurs around the lower third of the slope as illustrated in figure 5-4.

For trapezoidal channels lined with gravel or riprap having side slopes steeper than 3:1, side slope stability must also be considered. This analysis is performed by comparing the tractive force ratio

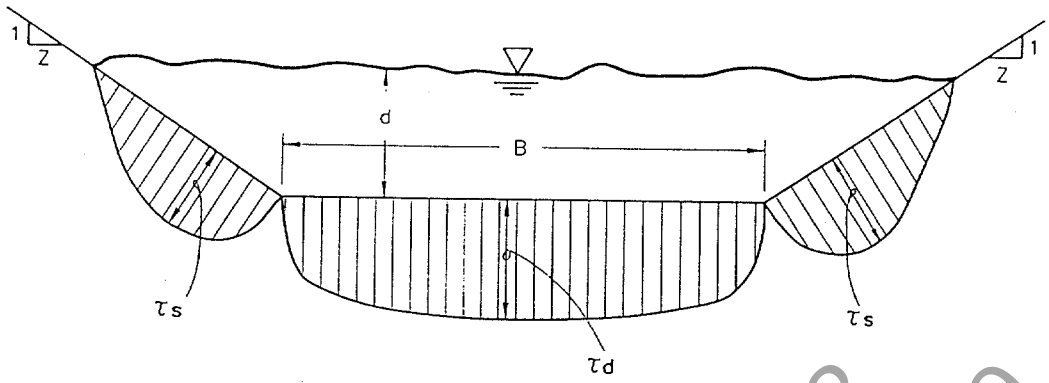


**Figure 5-4. Distribution of shear stress.**

between side slopes and channel bottom with the ratio of shear stresses exerted on the channel sides and bottom. The ratio of shear stresses on the sides and bottom of a trapezoidal channel, $K_1$, is given in chart 17 and the tractive force ratio, $K_2$, is given in chart 18. The angle of repose, $\theta$, for different rock shapes and sizes is provided in chart 19. The required rock size for the side slopes is found using the following equation:

$$(D_{50})_{sides} = \frac{K_1}{K_2} (D_{50})_{bottom} \tag{5-14}$$

where: $D_{50}$ = the mean riprap size, ft
$K_1$ = ratio of shear stresses on the sides and bottom of a trapezoidal channel (see chart 17).
$K_2$ = ratio of tractive force on the sides and bottom of a trapezoidal channel (see chart 18).

Flow around bends also creates secondary currents which impose higher shear stresses on the channel sides and bottom compared to straight reaches. Areas of high shear stress in bends are illustrated in figure 5-5. The maximum shear stress in a bend is a function of the ratio of channel curvature to bottom width. This ratio increases as the bend becomes sharper and the maximum shear stress in the bend increases. The bend shear stress can be computed using the following relationship:

$$\tau_b = K_b \, \tau_d \tag{5-15}$$

where: $\tau_b$ = bend shear stress, Pa (lb/ft$^2$)
$K_b$ = function of $R_c/B$ (see chart 21)
$R_c$ = radius to the centerline of the channel, m (ft)
$B$ = bottom width of channel, m (ft)
$\tau_d$ = maximum channel shear stress, Pa (lb/ft$^2$)

The increased shear stress produced by the bend persists downstream of the bend a distance $L_p$, as shown in figure 5-5. This distance can be computed using the following relationship:

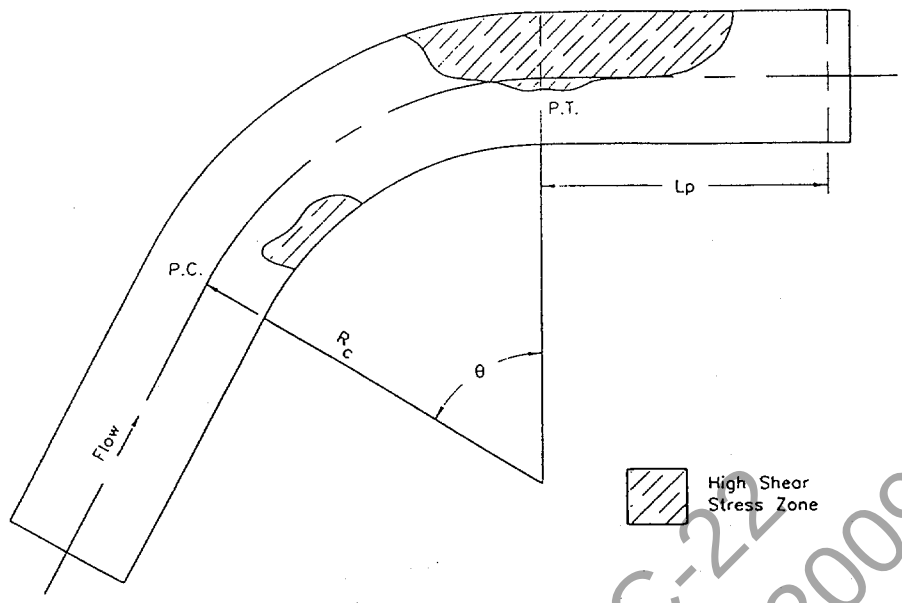


**Figure 5-5. Shear stress distribution in channel bends.**

$$L_p = \frac{0.736\ R^{7/6}}{n_b} \tag{5-16}$$

where: $L_p$ = length of protection (length of increased shear stress due to the bend) downstream of the point of tangency, m (ft)
$n_b$ = Manning's roughness in the channel bend
$R$ = hydraulic radius, m (ft)



***Example 5-2***

***Given:*** *A trapezoidal channel with the following characteristics:*

$S_o$ = *0.01*
$B$ = *0.90 m (3.0 ft)*
$z$ = *3*
*Lining* = *good stand of buffalo grass 80 mm to 150 mm in height; from example 5-1 part 2, n = 0.055.*

*The channel reach consists of a straight section and a 90 degree bend with a centerline radius of 4.5 m (14.8 ft). The design discharge is 0.80 $m^3/s$ (28.2 $ft^3/s$).*

***Find:*** *The maximum shear stress in the straight reach and in the bend.*

***Solution:***

*Step 1. Compute channel parameters.*

$Qn$ = *(0.80) (0.055)*
= *0.04 $m^3/s$ (1.4 $ft^3/s$)*

$d/B = 0.49$ (chart 14)
$d = B\ d/B = (0.90)(0.49)$
$= 0.44\ m\ (1.4\ ft)$

*Step 2. Compute maximum shear stress in straight reach.*

$\tau_d = \gamma d S$
$= (9810)\ (0.44)\ (0.01)$
$= 43.2\ Pa\ (9.70\ lb/ft^2)$

*Step 3. Compute shear stress in bend.*

$R_c/B = (4.50)/(0.90) = 5.0$
$K_b = 1.6$ (chart 21)

$\tau_b = K_b\ \tau_d$ (equation 5-15)
$= (1.6)\ (43.2)$
$= 69.1\ Pa\ (15.5\ lb/ft^2)$

*A computer solution of this example is presented in appendix B.*

## 5.2 DESIGN PARAMETERS

Parameters required for the design of roadside and median channels include discharge frequency, channel geometry, channel slope, vegetation type, freeboard, and shear stress. This section provides criteria relative to the selection or computation of these design elements.

### 5.2.1 Discharge Frequency

Roadside and median drainage channels are typically designed to carry 5 to 10 year design flows. However, when designing temporary channel linings a lower return period can be used; normally a 2-year return period is appropriate for the design of temporary linings.

### 5.2.2 Channel Geometry

Most highway drainage channels are trapezoidal in shape. Several typical shapes with equations for determining channel properties are illustrated in figure 5-6. The channel depth, bottom width, and top width must be selected to provide the necessary flow area. Chart 22 provides a nomograph solution for determining channel properties for trapezoidal channels.

**Channel side slopes** for triangular or trapezoidal channels should not exceed the angle of repose of the soil and/or lining material, and should generally be 3:1 or flatter [34]. In areas where traffic safety may be of concern, channel side slopes should be 4:1 or flatter.

Design of roadside and median channels should be integrated with the highway geometric and pavement design to insure proper consideration of safety and pavement drainage needs.

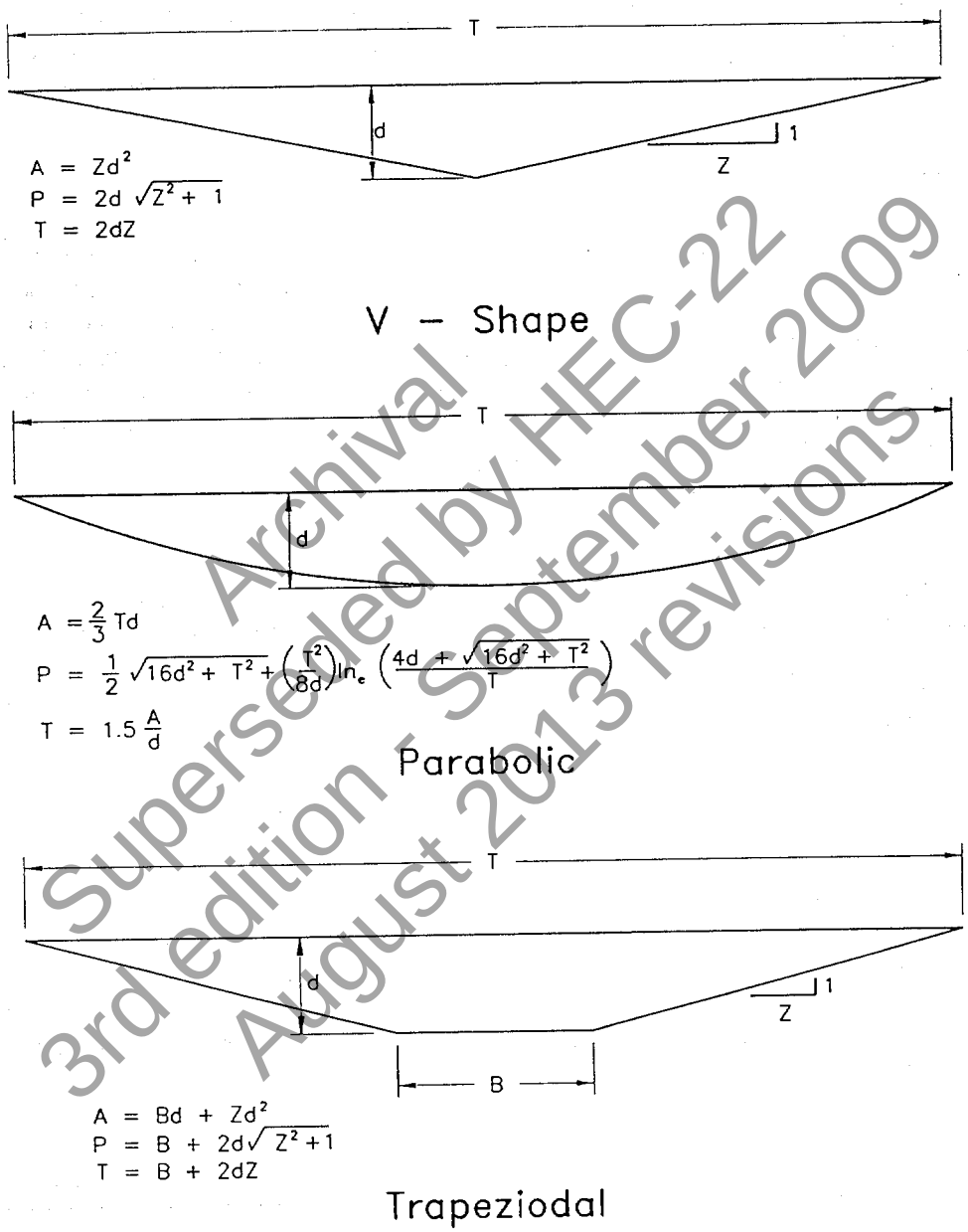




**Figure 5-6. Channel geometries.**

### 5.2.3 Channel Slope

Channel bottom slopes are generally dictated by the road profile or other constraints. However, if channel stability conditions warrant, it may be feasible to adjust the channel gradient slightly to achieve a more stable condition. Channel gradients greater than two percent may require the use of flexible linings to maintain stability. Most flexible lining materials are suitable for protecting channel gradients of up to 10 percent, with the exception of some grasses. Linings, such as riprap and wire-enclosed riprap are more suitable for protecting very steep channels with gradients in excess of 10 percent. Rigid linings, such as concrete paving, are highly susceptible to failure from structural instability due to such occurrences as overtopping, freeze thaw cycles, swelling, and excessive soil pore water pressure.

### 5.2.4 Freeboard

The freeboard of a channel is the vertical distance from the water surface to the top of the channel. The importance of this factor depends on the consequence of overflow of the channel bank. At a minimum the freeboard should be sufficient to prevent waves, superelevation changes, or fluctuations in water surface from overflowing the sides. In a permanent roadside or median channel, about 150 mm (0.5 ft) of freeboard is generally considered adequate. For temporary channels no freeboard is necessary. However, a steep gradient channel should have a freeboard height equal to the flow depth to compensate for the large variations in flow caused by waves, splashing, and surging.

### 5.2.5 Shear Stress

The permissible or critical shear stress in a channel defines the force required to initiate movement of the channel bed or lining material. Table 5-4 presents permissible shear stress values for manufactured, vegetative, and riprap channel lining. The permissible shear stress for non-cohesive soils is a function of mean diameter of the channel material as shown in chart 23. For larger stone sizes not shown in chart 23 and rock riprap, the permissible shear stress is given by the following equation:

$$\tau_p = K_p D_{50} \tag{5-17}$$

where: $\tau_p$ = permissible shear stress, Pa (lb/ft$^2$)
$D_{50}$ = mean riprap size, m (ft)
$K_p$ = 628 (4.0)

For cohesive materials the plasticity index provides a good guide for determining the permissible shear stress as illustrated in chart 24.

***Example 5-3***

***Given:*** *The channel section and flow conditions in example 5-2.*

***Find:*** *Determine if a good stand of buffalo grass (Class D degree of retardance) will provide an adequate lining for this channel.*

**Table 5-4. Permissible shear stresses for lining materials. ****

| Lining Category | Lining Type | Permissible Unit Shear Stress Pa | Permissible Unit Shear Stress lb/ft$^2$ |
|---|---|---|---|
| Temporary* | Woven Paper Net | 7.2 | 0.15 |
| | Jute Net | 21.6 | 0.45 |
| | Fiberglass Roving: | | |
| | Single | 28.7 | 0.60 |
| | Double | 40.7 | 0.85 |
| | Straw with Net | 69.5 | 1.45 |
| | Curled Wood Mat | 74.3 | 1.55 |
| | Synthetic Mat | 95.7 | 2.00 |
| Vegetative | Class A | 177.2 | 3.70 |
| | Class B | 100.6 | 2.10 |
| | Class C | 47.9 | 1.00 |
| | Class D | 28.7 | 0.60 |
| | Class E | 16.8 | 0.35 |
| Gravel Riprap | 25 mm (1 in) | 15.7 | 0.33 |
| | 50 mm (2 in) | 31.4 | 0.67 |
| Rock Riprap | 150 mm (6 in) | 95.7 | 2.00 |
| | 300 mm (12 in) | 191.5 | 4.00 |
| Bare Soil | Non-cohesive | see chart 23 | |
| | Cohesive | see chart 24 | |

* Some "temporary" linings become permanent when buried.
** Reproduced from HEC-15 [34]

***Solution:***

*Step 1. Determine permissible shear stress.*

$\tau_p$ = *28.7 Pa (0.60 lb/ft$^2$)* *table 5-4*

*Step 2. Compare $\tau_p$ with the maximum shear stress in the straight section, $\tau_d$, and with the shear stress in the bend, $\tau_b$.*

$\tau_d$ = *43.2 Pa (9.70 lb/ft$^2$)*
$\tau_b$ = *69.1 Pa (15.5 lb/ft$^2$)*

$\tau_p = 28.74 < \tau_d = 43.2$
$\tau_p = 28.74 < \tau_b = 69.1$

*Therefore, the buffalo grass does not provide adequate lining for the channel in either the straight section or in the bend.*

*A computer solution of this example is presented in appendix B.*

***Example 5-4***

***Given:*** *The channel section and flow conditions in example 5-2 and 5-3.*

***Find:*** *Determine the length of increased shear stress downstream of the point of tangency of the 90 degree bend.*

***Solution:***

*Step 1. Determine flow depth and hydraulic radius.*

*It is assumed that the flow depth and hydraulic radius in the bend will be approximately the same as those in the straight reach.*

$d = 0.44\ m\ (1.4\ ft)$ *(example 5-2)*

$\text{with } d/B = 0.44/0.90 = 0.49,$

$R/d = 0.61$ *(chart 22)*

$R = d\ R/d = (0.44)\ (0.61) = 0.27\ m\ (0.89\ ft)$

*Step 2. Determine channel roughness in the bend.*

$n = 0.050$ *(example 5-2)*

*Step 3. Determine length of increased shear stress.*

$$L_p = 0.736\ R^{7/6} / n_b = 0.736\ (0.27)^{7/6} / (0.050) = 3.2\ m\ (10.5\ ft)$$ *(equation 5-16)*

*Since the permissible shear stress, $\tau_p$, was less than the actual shear stress in the bend, $\tau_b$, an adequate lining material would have to be installed throughout the bend plus the length $L_p$ downstream of the point of tangency of the curve.*



## 5.3 DESIGN PROCEDURE

This section presents a generalized procedure for the design of roadside and median channels. Although each project will be unique, the design steps outlined below will normally be applicable.

### Step 1. Establish a Preliminary Drainage Plan

Development of a preliminary drainage concept plan is discussed in section 2.6. For proposed median or roadside channels, the following preliminary action should be taken :

A. Prepare existing and proposed plan and profile of the proposed channels. Include any constraints on design such as highway and road locations, culverts, utilities, etc.

B. Determine and plot on the plan the locations of natural basin divides and channel outlet points.

C. Collect any available site data such as soil types and topographic information.

**Step 2. Obtain or Establish Cross Section Data**

Establish preliminary cross section geometric parameters and controlling physical features considering the following guides:

A. Adequate channel depth should be provided to drain the subbase and minimize freeze-thaw.

B. Channel side slopes based on geometric design criteria including safety, economics, soil, aesthetics, and access should be chosen.

**Step 3. Determine Initial Channel Grades**

Plot initial grades on the plan and profile. Note that slopes on roadside channels in cuts are usually controlled by highway grades. Use the following guides when establishing initial grades:

A. Provide a channel slope with sufficient grade to minimize ponding and sediment accumulation.

B. Where possible, avoid features which may influence or restrict grade, such as utility structures.

**Step 4. Check flow Capacities and Adjust Sections as Necessary**

A. Compute the design discharge at the downstream end of channel segments (see chapter 3).

B. Set preliminary values for channel size, roughness, and slope, based on long term conditions and considering maintenance.

C. Determine the maximum allowable depth of channel including freeboard.

D. Check the flow capacity using Manning's equation (equation 5-5; chart 1 for V-shaped channels and chart 14 for Trapezoidal Channels).

E. If the capacity is not adequate, possible considerations for increasing the capacity are provided below.

- increase bottom width,
- make channel side slopes flatter,
- make channel slope steeper,
- provide smoother channel lining, and
- install drop inlets and a parallel storm drain pipe beneath the channel to supplement channel capacity.

**Step 5. Determine Channel Protection Needed**

A. Select a lining and determine the permissible shear stress from table 5-2 and/or 5-4. For detailed information related to lining performance, see reference 34.

B. Estimate the flow depth and choose an initial Manning's n value from table 5-1, table 5-3, or from chart 16.

C. Calculate the normal flow depth at design discharge using Manning's equation and compare with the estimated depth. If the flow depth is acceptable, continue with the design procedure. If the depth is not acceptable, modify the channel size.

D. Compute the maximum shear stress at normal depth using equation 5-13.

E. If the maximum shear stress (step 5D) is less than the permissible shear stress (step 5A), then the lining is acceptable. Otherwise consider the following options:

- choose a more resistant lining,
- use concrete, gabions, or other more rigid lining either as full lining or composite (keeping in consideration the possible deficiencies of rigid linings),
- decrease channel slope,
- decrease slope in combination with drop structures, and/or
- increase channel width and/or flatten side slopes.

If the maximum shear stress is excessively less than the permissible shear stress, the lining material may be redesigned to provide a more comparable lining material.

F. For trapezoidal channels lined with gravel or riprap having side slopes steeper than 3:1, use equation 5-14 and charts 17 and 18 to evaluate side slope stability.

G. For flow around bends, use equation 5-15 and chart 21 to evaluate lining stability.

H. When channel gradients approach 10 percent, compare results obtained above with steep slope procedures in reference 34.

I. For composite linings use procedures in reference 34.

**Step 6. Check Channel Transitions and End of Reach Conditions**

Channel transition include locations where there are changes in cross section, slope, discharge, and/or roughness. At these locations, the gradually varying flow assumption may be violated, and a more detailed hydraulic evaluation may be required.

A. Identify transition locations.

B. Review hydraulic conditions upstream and downstream of the transition (flow area, depth, and velocity). If significant changes in these parameters are observed, perform additional hydraulic evaluations to determine flow conditions in the vicinity of the transition. Use the energy equation presented in equation 5-2 or other information in references 7 and 31 through 35 to evaluate transition flow conditions.

C. Provide for gradual channel transitions to minimize the possibility for sudden changes in hydraulic conditions at channel transitions.

**Step 7. Analyze Outlet Points and Downstream Effects**

A. Identify any adverse impacts to downstream properties which may result from one of the following at the channel outlets:

- increase or decrease in discharge,
- increase in flow velocity,
- confinement of sheet flow,
- change in outlet water quality, or
- diversion of flow from another watershed.

B. Mitigate any adverse impacts identified in 7A. Possibilities in order relative to above impacts include:

- enlarge outlet channel and/or install control structures to provide detention of increased runoff in channel (see chapter 8),
- install velocity control or energy dissipation structure (see reference 34),
- increase capacity and/or improve lining of downstream channel,
- install sophisticated weirs or other outlet devices to redistribute concentrated channel flow, and
- eliminate diversions which result in downstream damage and which cannot be mitigated in a less expensive fashion.

To obtain the optimum roadside channel system design, it may be necessary to make several trials of the above procedure before a final design is achieved.

# 6. STRUCTURES

Certain appurtenant structures are essential to the proper functioning of every storm drainage system. These structures include inlet structures, access holes, and junction chambers. Other miscellaneous appurtenances include transitions, flow splitters, siphons, and flap gates.

Most State Departments of Transportation have developed their own design standards for commonly used structures. Therefore, it is to be expected that many variations will be found in the design of even the simplest structures. The discussion to follow is limited to a general description of these structures with special emphasis on the features considered essential to good design.

## 6.1 INLET STRUCTURES

The primary function of an inlet structure is to allow surface water to enter the storm drainage system. As a secondary function, inlet structures also serve as access points for cleaning and inspection. The materials most commonly used for inlet construction are cast-in-place concrete and pre-cast concrete.

### 6.1.1 Configuration

Inlet structures are box structures with inlet openings to receive surface water. Figure 6-1 illustrates several typical inlet structures including a standard drop inlet, catch basin, curb inlet, and combination inlet. The hydraulic design of surface inlets is covered in detail in chapter 4.

The catch basin, illustrated in figure 6-1.b, is a special type of inlet structure designed to retain sediment and debris transported by stormwater into the storm drainage system. Catch basins include a sump for the collection of sediment and debris. Catch basin sumps require periodic cleaning to be effective, and may become an odor and mosquito nuisance if not properly maintained. However, in areas where site constraints dictate that storm drains be placed on relatively flat slopes, and where a strict maintenance plan is followed, catch basins can be used to collect sediment and debris but are still ineffective in reducing other pollutant loadings. Additional detail of pre-cast storm drain inlets designed specifically to remove sediment, oil, and debris is discussed in chapter 10, section 8.

### 6.1.2 Location

Inlet structures are located at the upstream end and at intermediate points along a storm drain line. Inlet spacing is controlled by the geometry of the site, inlet opening capacity, and tributary drainage magnitude (see chapter 4). Inlet placement is generally a trial and error procedure that attempts to produce the most economical and hydraulically effective system. The following general rules apply to inlet placement [8]:

- An inlet is required at the uppermost point in a gutter section where gutter capacity criteria are violated. This point is established by moving the inlet and thus changing the drainage area until the tributary flow equals the gutter capacity. Successive inlets are spaced by locating the point where the sum of the bypassing flow and the flow from the additional contributing area exceed the gutter capacity. Example 4-15 illustrates inlet spacing procedures.

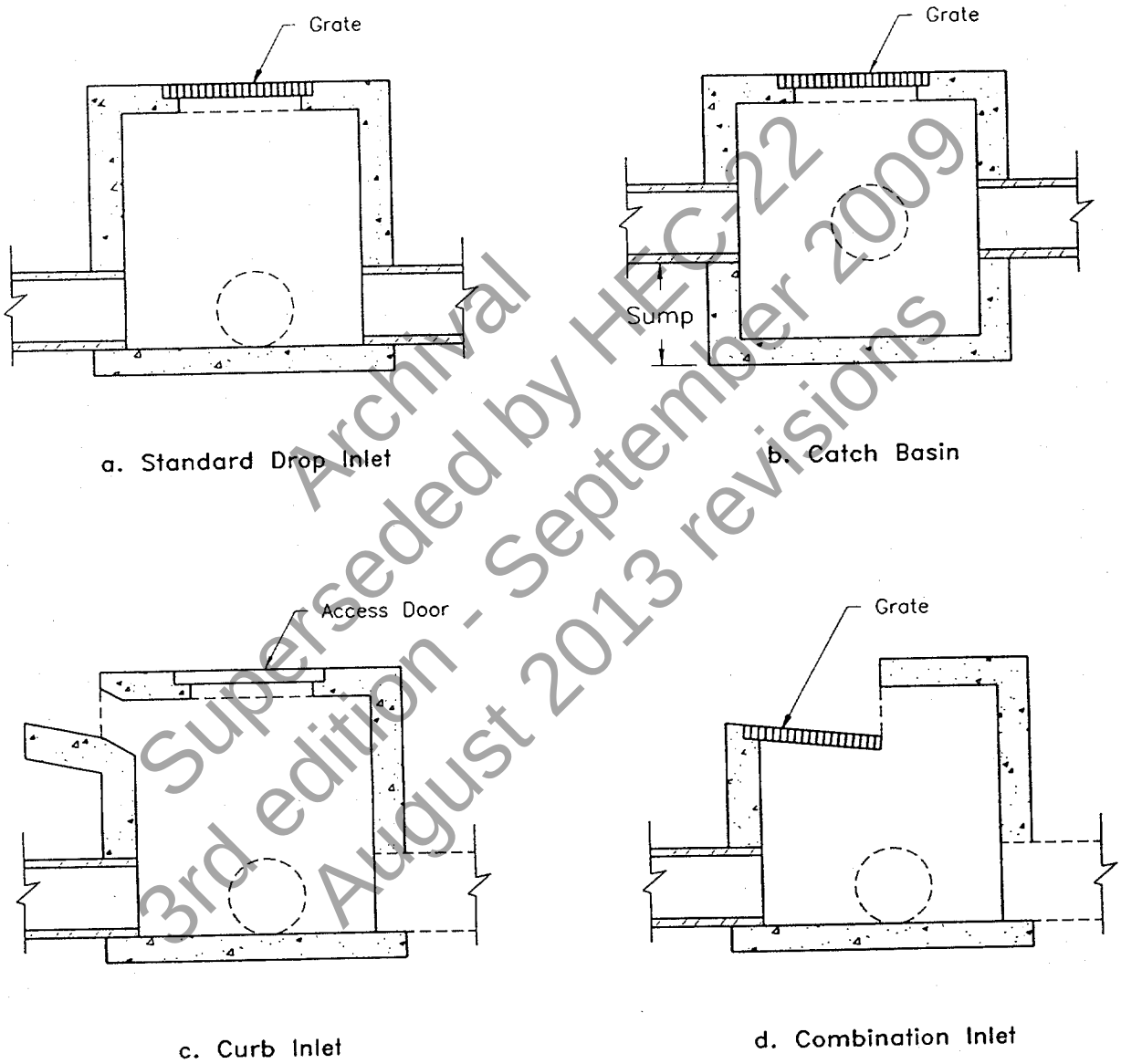




**Figure 6-1. Inlet structures.**

- Inlets are normally used at intersections to prevent street cross flow which could cause pedestrian or vehicular hazards. It is desirable to intercept 100 percent of any potential street cross flow under these conditions. Intersection inlets should be placed on tangent curb sections near corners.

- Inlets are also required where the street cross slope begins to superelevate. The purpose of these inlets is also to reduce the traffic hazard from street cross flow. Sheet flow across the pavement at these locations is particularly susceptible to icing.

- Inlets should also be located at any point where side drainage enters streets and may overload gutter capacity. Where possible, these side drainage inlets should be located to intercept side drainage before it enters the street.

- Inlets should be placed at all low points in the gutter grade and at median breaks.

- Inlets are also used upstream of bridges to prevent pavement drainage from flowing onto the bridge decks and downstream of bridges to intercept drainage from the bridge.

- As a matter of general practice, inlets should not be located within driveway areas.



## 6.2 ACCESS HOLES

The primary function of an access hole is to provide convenient access to the storm drainage system for inspection and maintenance. As secondary functions, access holes also serve as flow junctions, and can provide ventilation and pressure relief for storm drainage systems. It is noted that inlet structures can also serve as access holes, and should be used in lieu of access holes were possible so that the benefit of extra stormwater interception is achieved at minimal additional cost.

Like storm drain inlets, the materials most commonly used for access hole construction are pre-cast concrete and cast-in-place concrete. In most areas, pre-cast concrete access hole sections are commonly used due to their availability and competitive cost. They can be obtained with cast-in-place steps at the desired locations and special transition sections are available to reduce the diameter of the access hole at the top to accommodate the frame and cover. The transition sections are usually eccentric with one side vertical to accommodate access steps. Pre-cast bottoms are also available in some locations.

### 6.2.1 Configuration

Figure 6-2 illustrates several typical access hole configurations. Where storm drains are too large to reasonably accommodate the typical structure configurations illustrated in figure 6-2, a vertical riser connected to the storm drain with a commercial "tee" unit is often used. Such a configuration is illustrated in figure 6-3. As illustrated in figure 6-2, the design elements of an access hole include the bottom chamber and access shaft, the steps, and the access hole bottom. Each of these elements are discussed in the following sections.

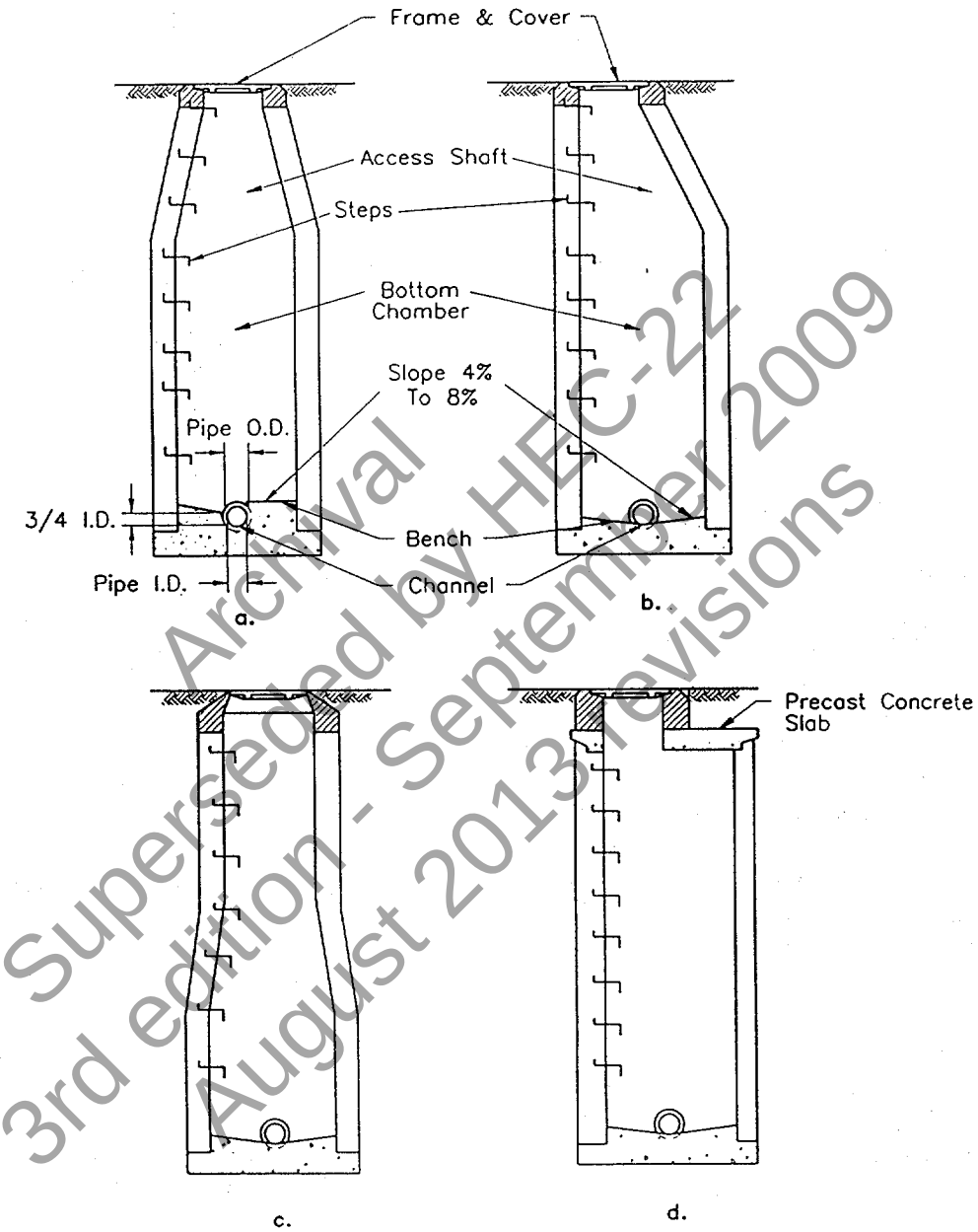




**Figure 6-2. Typical access hole configurations.**

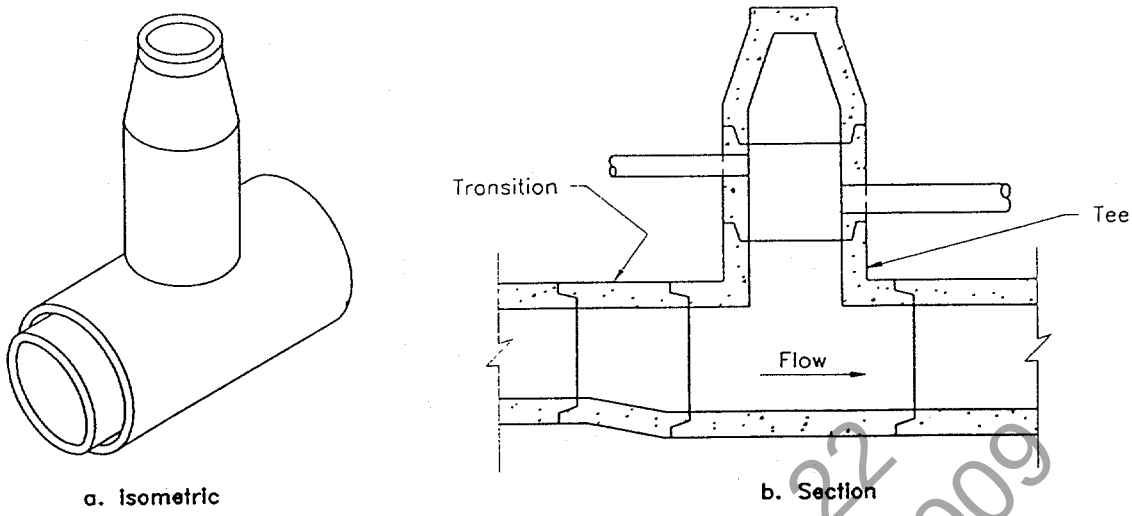


**Figure 6-3. "Tee" access hole for large storm drains.**

### 6.2.2 Chamber and Access Shaft

Most access holes are circular with the inside dimension of the bottom chamber being sufficient to perform inspection and cleaning operations without difficulty. A minimum inside diameter of 1.2 m (4 ft) has been adopted widely with 1.5 m (5 ft) diameter access hole being used for larger diameter storm drains. The access shaft (cone) tapers to a cast-iron frame that provides a minimum clear opening usually specified as 0.5 to 0.6 m (22 to 24 inches). It is common practice to maintain a constant diameter bottom chamber up to a conical section a short distance below the top as shown in figure 6-2.a. It has also become common practice to use eccentric cones for the access shaft, especially in precast access hole. This provides a vertical side for the steps (figure 6-2.b) which makes it much easier to access.

Another design option maintains the bottom chamber diameter to a height sufficient for a good working space, then taper to 0.9 m (3 ft) as shown in figure 6-2.c. The cast iron frame in this case has a broad base to rest on the 0.9 m (3 ft) diameter access shaft. Still another design uses a removable flat reinforced concrete slab instead of a cone, as shown in figure 6-2.d.

As illustrated in figure 6-2, the access shaft can be centered over the access hole or offset to one side. The following guidelines are made in this regard:

- For access holes with chambers 0.9 m (3 ft) or less in diameter, the access shaft can be centered over the axis of the access hole.

- For access holes with chamber diameters 1.2 m (4 ft) or greater in diameter, the access shaft should be offset and made tangent to one side of the access hole for better location of the access hole steps.

- For access holes with chambers greater than 1.2 (4 ft) in diameter, where laterals enter from both sides of the access hole, the offset should be toward the side of the smaller lateral.

- The access hole should be oriented so the workers enter it while facing traffic if traffic exists.

### 6.2.3 Frame and Cover

Access hole frames and covers are designed to provide adequate strength to support superimposed loads, provide a good fit between cover and frame, and maintain provisions for opening while providing resistance to unauthorized opening (primarily from children). In addition, to differentiate storm drain access holes from those on sanitary sewers, communication conduits, or other underground utilities, it is good practice to have the words "STORM DRAIN" or equivalent cast into the top surface of the covers. Most agencies maintain frame and cover standards for their systems.

If the hydraulic grade line could rise above the ground surface at an access hole site, special consideration must be given to the design of the access hole frame and cover. The cover must be secured so that it remains in place during peak flooding periods, avoiding an access hole "blowout". A "blowout" is caused when the hydraulic grade line rises in elevation higher than the access hole cover and forces the lid to explode off. Access hole covers should be bolted or secured in place with a locking mechanism if "blowout" conditions are possible.

### 6.2.4 Steps

Steps are intended to provide a means of convenient access to the access hole. Where access steps are provided, each step should be designed to comply with OSHA requirements. The steps should be corrosion resistant. Steps coated with neoprene or epoxy, or steps fabricated from rust-resistant material such as stainless steel or aluminum coated with bituminous paint are preferable. Steps made from reinforcing steel are absolutely unacceptable.

It is noted that some agencies have abandoned the use of access hole steps in favor of having maintenance personnel supply their own ladders. Reasons for this include danger from rust-damaged steps and the desire to restrict access.

### 6.2.5 Channel and Bench

Flow channels and benches are illustrated in figure 6-2. The purpose of the flow channel is to provide a smooth, continuous conduit for the flow and to eliminate unnecessary turbulence in the access hole by reducing energy losses. The elevated bottom of the access hole on either side of the flow channel is called the bench. The purpose of a bench is to increase hydraulic efficiency of the access hole.

In the design of access holes, benched bottoms are not common. Benching is only used when the hydraulic grade line is relatively flat and there is no appreciable head available. Typically, the slopes of storm drain systems do not require the use of benches to hold the hydraulic grade line in the correct place. Where the hydraulic grade line is not of consequence, the extra expense of adding benches should be avoided.

For the design of the inflow and outflow pipe invert elevations, the pipes should be set so the top of the outlet pipe is below the top of the inlet pipe by the amount of loss in the access hole. This practice is often referred to as "hanging the pipe on the hydraulic grade line."

### 6.2.6 Access Hole Depth

The depth required for an access hole will be dictated by the storm drain profile and surface topography. Common access hole depths range from 1.5 to 4.0 m (5 to 13 ft). Access holes which are shallower or deeper than this may require special consideration.

Irregular surface topography sometimes results in shallow access holes. If the depth to the invert is only 0.6 to 0.9 m (2 to 3 ft), all maintenance operations can be conducted from the surface. However, maintenance activities are not comfortable from the surface, even at shallow depths. It is recommended that the access hole width be of the same size as that for greater depths. Typical access hole widths are 1.2 to 1.5 m (4 to 5 ft). For shallow access holes use of an extra large cover with a 0.7 or 0.9 m (30 or 36 inch) opening will enable a worker to stand in the access hole for maintenance operations.

Deep access holes must be carefully designed to withstand soil pressure loads. If the access hole is to extend very far below the water table, it must also be designed to withstand the associated hydrostatic pressure or excessive seepage may occur. Since long portable ladders would be cumbersome and dangerous, access must be provided with either steps or built-in ladders.

### 6.2.7 Location and Spacing

Access hole location and spacing criteria have been developed in response to storm drain maintenance requirements. Spacing criteria are typically established based on a local agencies past experience and maintenance equipment limitations. At a minimum, access holes should be located at the following points:

- where two or more storm drains converge,
- where pipe sizes change,
- where a change in alignment occurs, and
- where a change in grade occurs.

In addition, access holes may be located at intermediate points along straight runs of storm drain in accordance with the criteria outlined in table 6-1; however, individual transportation agencies may have limitations on spacing of access holes due to maintenance constraints.

**Table 6-1. Access hole spacing criteria.**

| Pipe Size mm (in) | Suggested Maximum Spacing m (ft) |
|---|---|
| 300-600 (12 - 24) | 100 (300) |
| 700-900 (27 - 36) | 125 (400) |
| 1000-1400 (42 - 54) | 150 (500) |
| 1500 and up (60 and up) | 300 (1000) |

## 6.3 JUNCTION CHAMBERS

A junction chamber is a special design underground chamber used to join two or more large storm drain conduits. This type of structure is usually required where storm drains are larger than the size that can be accommodated by standard access holes. For smaller diameter storm drains, access holes are typically used instead of junction chambers. Junction chambers by definition do not need to extend to the ground surface and can be completely buried. However, it is recommended that riser structures be used to provide for surface access and/or to intercept surface runoff.

Materials commonly used for junction chamber construction include pre-cast concrete and cast-in-place concrete. On storm drains constructed of corrugated steel the junction chambers are sometimes made of the same material.

To minimize flow turbulence in junction boxes, flow channels and benches are typically built into the bottom of the chambers. Figure 6-4 illustrates several efficient junction channel and bench geometries.

Where junction chambers are used as access points for the storm drain system, their location should adhere to the spacing criteria outlined in section 6.2.7.



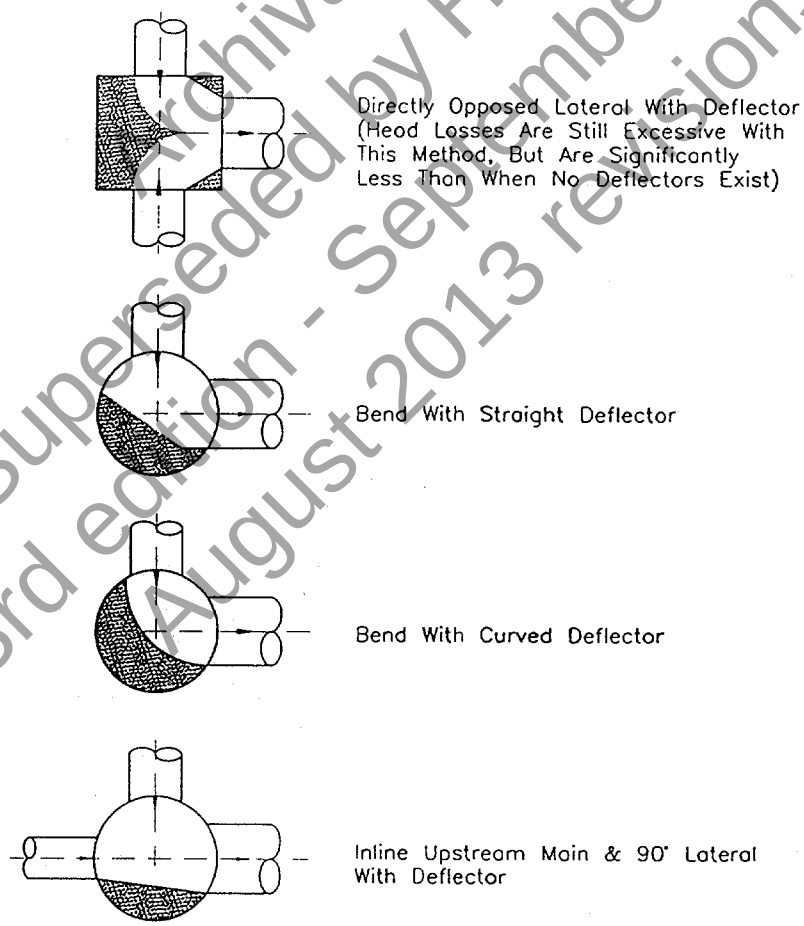


**Figure 6-4. Efficient channel and bench configurations.**

## 6.4 OTHER APPURTENANCES

Inlet structures, access holes, and junction chambers, are the most common storm drainage system structures. Other appurtenances worthy of mention include transitions, flow splitters, siphons, and flap gates. These elements are briefly discussed in the following sections.

### 6.4.1 Transitions

In storm drainage systems, transitions from one pipe size to another typically occur in access holes or junction chambers. However, there are times when transitions may be required at other locations within the storm drainage system. A typical example is illustrated in figure 6-5 where a rectangular pipe transition is used to avoid an obstruction. Commercially available transition sections are also available for circular pipes. These transitions can be used upstream of "tee" type access holes in large storm drains as illustrated in figure 6-3.

Providing a smooth, gradual transition to minimize head losses is the most significant consideration in the design of transition sections. Table 6-2 provides design criteria for transition sections.



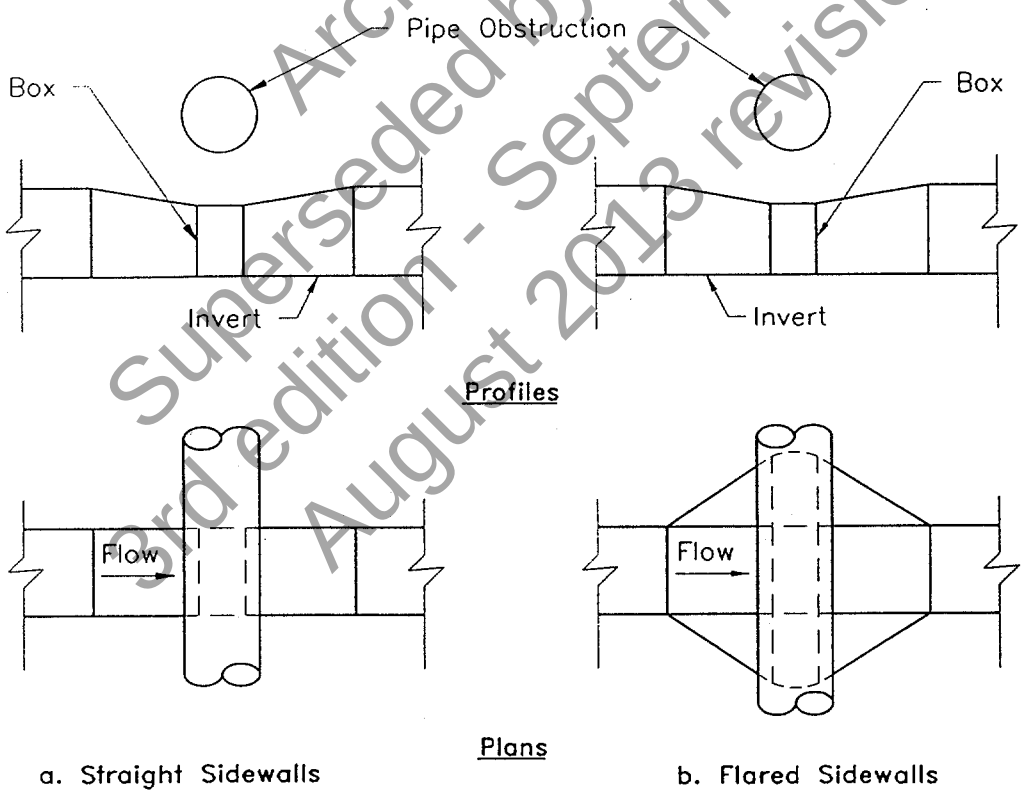


**Figure 6-5. Transitions to avoid obstruction.**

**Table 6-2. Transition design criteria.**

| TYPE | Flow Condition | |
|---|---|---|
| | V < 6 m/s (20 ft/s) | V ≥ 6 m/s (20 ft/s) |
| Expansion | Straight walls Ratio - 5:1 to 10:1 | Straight walls Ratio - 10:1 to 20:1 |
| Contraction | Straight walls Ratio - 5:1 to 10:1 | Straight walls Ratio - 10:1 to 20:1 |

### 6.4.2 Flow Splitters

As described in reference 8, a flow splitter is a special structure designed to divide a single flow, and divert the parts into two or more downstream channels. Flow splitters are constructed in a fashion similar to junction boxes except that flows from a single large storm drain are split into several smaller storm drains.

The design of flow splitters must consider minimizing head loss and potential debris problems. Hydraulic disturbances at the point of flow division result in unavoidable head losses. These losses may be reduced by the inclusion of proper flow deflectors in the design of the structure. Hydraulic disturbances within flow splitters often result in regions of flow velocity reduction. These reductions can cause deposition of material suspended in the stormwater flow. In addition, the smaller pipes may not be large enough to carry some of the debris being passed by the large pipe. In some cases, flow splitters can become maintenance intensive. Therefore, their use should be judiciously controlled, and when used, positive maintenance access must be provided.

### 6.4.3 Siphons

In practice the term siphon refers to an inverted siphon or depressed pipe which would stand full even without any flow. Its purpose is to carry the flow under an obstruction such as a stream or depressed highway and to regain as much elevation as possible after the obstruction has been passed. Siphons can consist of single or multiple barrels, however AASHTO recommends a minimum of two barrels [38]. Figure 6-6 illustrates a twin barrel siphon.

The following considerations are important to the efficient design of siphons:

- Self flushing velocities should be provided under a wide range of flows.
- Hydraulic losses should be minimized.
- Provisions for cleaning should be provided.
- Sharp bends should be avoided.
- The rising portion of the siphon should not be too steep as to make it difficult to flush deposits (some agencies limit the rising slope to 15 percent).
- There should be no change in pipe diameter along the length of the siphon.

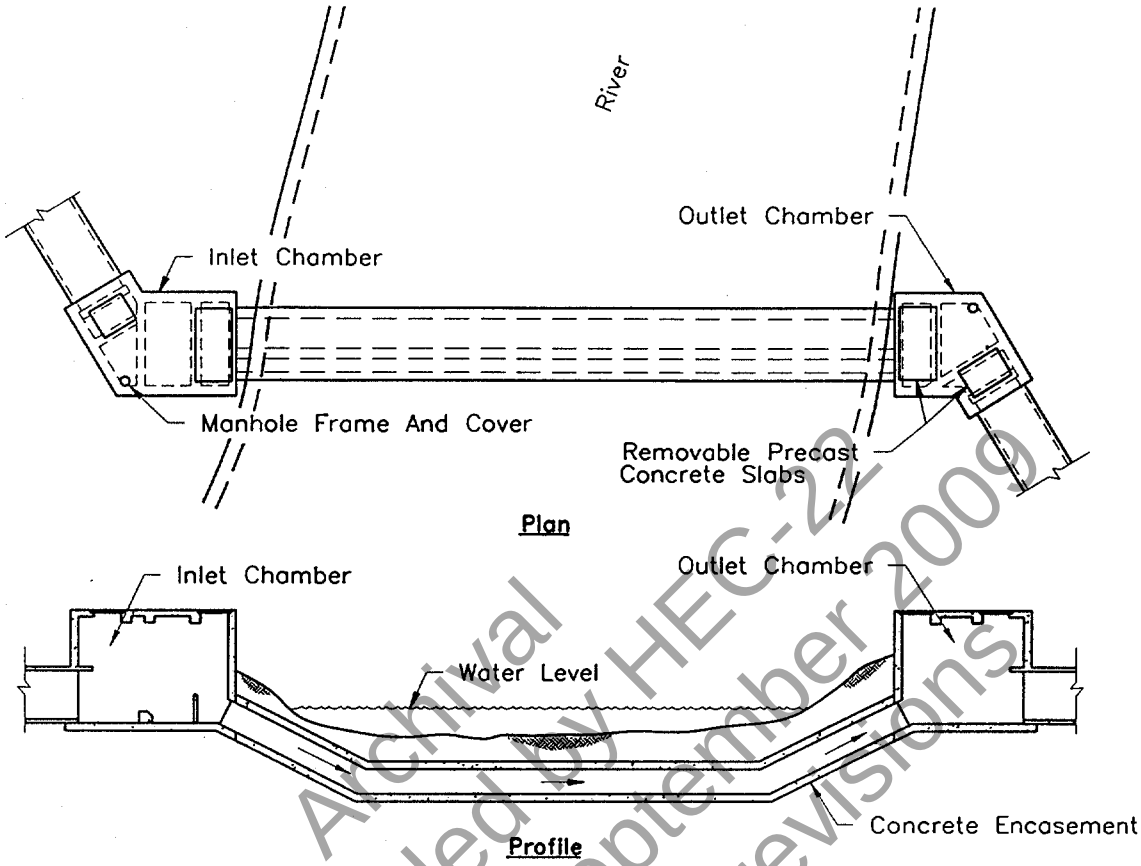


**Figure 6-6. Twin-barrel siphon.**

- Provisions for drainage should be considered.

Additional information related to the design of siphons is provided in reference 37.

### 6.4.4 Flap Gates

Flap gates are installed at or near storm drain outlets for the purpose of preventing back-flooding of the drainage system at high tides or high stages in the receiving streams. A small differential pressure on the back of the gate will open it, allowing discharge in the desired direction. When water on the front side of the gate rises above that on the back side, the gate closes to prevent backflow. Flap gates are typically made of cast iron or rubber or steel, and are available for round, square, and rectangular openings and in various designs and sizes.

Maintenance is a necessary consideration with the use of flap gates. In storm drain systems which are known to carry significant volumes of suspended sediment and/or floating debris flap gates can act as skimmers and cause brush and trash to collect between the flap and seat. The reduction of flow velocity behind a flap gate may also cause sediment deposition in the storm drain near the outlet. Flap gate installations require regular inspection and removal of accumulated sediment and debris.

In addition, for those drainage structures that have a flap gate mounted on a pipe projecting into a stream, the gate must be protected from damage by floating logs or ice during high flows. In these instances, protection must be provided on the upstream side of the gate.

# 7. STORM DRAINS

A storm drain is that portion of the highway drainage system which receives surface water through inlets and conveys the water through conduits to an outfall. It is composed of different lengths and sizes of pipe or conduit connected by appurtenant structures. A section of conduit connecting one inlet or appurtenant structure to another is termed a "segment" or "run". The storm drain conduit is most often a circular pipe, but can also be a box or other enclosed conduit shapes. Appurtenant structures include inlet structures (excluding the actual inlet opening), access holes, junction chambers, and other miscellaneous structures. Generalized design considerations for these structures were presented in chapter 6. The computation of energy losses through these structures will be included here.

## 7.1 HYDRAULICS OF STORM DRAINAGE SYSTEMS

Hydraulic design of storm drainage systems requires an understanding of basic hydrologic and hydraulic concepts and principles. Hydrologic concepts were discussed in chapter 3. Important hydraulic principles include flow classification, conservation of mass, conservation of momentum, and conservation of energy. Some of these elements were introduced in chapter 5. Additional discussion of these topics can be found in references 7, 31, and 36. The following sections assume a basic understanding of these topics.



### 7.1.1 Flow Type Assumptions

The design procedures presented here assume that flow within each storm drain segment is steady and uniform. This means that the discharge and flow depth in each segment are assumed to be constant with respect to time. Also, since storm drain conduits are typically prismatic, the average velocity throughout a segment is considered to be constant.

In actual storm drainage systems, the flow at each inlet is variable, and flow conditions are not truly steady or uniform. However, since the usual hydrologic methods employed in storm drain design are based on computed peak discharges at the beginning of each run, it is a conservative practice to design using the steady uniform flow assumption.

### 7.1.2 Open Channel vs. Pressure Flow

Two design philosophies exist for sizing storm drains under the steady uniform flow assumption. The first is referred to as open channel or gravity flow design. To maintain open channel flow, the segment must be sized so that the water surface within the conduit remains open to atmospheric pressure. For open channel flow, flow energy is derived from the flow velocity (kinetic energy), depth (pressure), and elevation (potential energy). If the water surface throughout the conduit is to be maintained at atmospheric pressure, the flow depth must be less than the height of the conduit.

Pressure flow design requires that the flow in the conduit be at a pressure greater than atmospheric. Under this condition, there is no exposed flow surface within the conduit. In pressure flow, flow energy is again derived from the flow velocity, depth, and elevation. The significant difference here is that the pressure head will be above the top of the conduit, and will not equal the depth of flow in the conduit. In this case, the pressure head rises to a level represented by the hydraulic grade line (see section 7.1.4 for a discussion of the hydraulic grade line).

The question of whether open channel or pressure flow should control design has been debated among various highway agencies. For a given flow rate, design based on open channel flow requires larger conduit sizes than those sized based on pressure flow. While it may be more expensive to construct storm drainage systems designed based on open channel flow, this design procedure provides a margin of safety by providing additional headroom in the conduit to accommodate an increase in flow above the design discharge. This factor of safety is often desirable since the methods of runoff estimation are not exact, and once placed, storm drains are difficult and expensive to replace.

However, there may be situations where pressure flow design is desirable. For example, on some projects, there may be adequate headroom between the conduit and inlet/access hole elevations to tolerate pressure flow. In this case, a significant costs savings may be realized over the cost of a system designed to maintain open channel flow. Also, in some cases it may be necessary to use an existing system which must be placed under pressure flow to accommodate the proposed design flow rates. In instances such as these, there may be advantages in making a cursory hydraulic and economic analysis of a storm drain using both design methods before making a final selection.

Under most ordinary conditions, it is recommended that storm drains be sized based on a gravity flow criteria at flow full or near full. Designing for full flow is a conservative assumption since the peak flow actually occurs at 93% of full flow. However, the designer should maintain an awareness that pressure flow design may be justified in certain instances. When pressure flow is allowed, special emphasis should be placed on the proper design of the joints so that they are able to withstand the pressure flow.



### 7.1.3 Hydraulic Capacity

The hydraulic capacity of a storm drain is controlled by its size, shape, slope, and friction resistance. Several flow friction formulas have been advanced which define the relationship between flow capacity and these parameters. The most widely used formula for gravity and pressure flow in storm drains is Manning's Equation.

The Manning Equation was introduced in chapter 4 for computing gutter capacity (equation 4-2) and again in chapter 5 for computing the capacity for roadside and median channels (equation 5-5). For circular storm drains flowing full, Manning's Equation becomes:

$$V = \frac{K_V}{n} D^{0.67} S_o^{0.5} \qquad Q = \frac{K_Q}{n} D^{2.67} S_o^{0.5} \tag{7-1}$$

where:
- $V$ = mean velocity, m/s (ft/s)
- $Q$ = rate of flow, $m^3/s$ ($ft^3/s$)
- $K_V$ = 0.397 (0.59)
- $K_Q$ = 0.312 (0.46)
- $n$ = Manning coefficient (see table 7-1)
- $D$ = storm drain diameter, m (ft)
- $S_o$ = slope of the hydraulic grade line m/m (ft/ft)

A nomograph solution of Manning's Equation for full flow in circular conduits is presented in chart 25. Representative values of the Manning coefficient for various storm drain materials are provided in table 7-1. It should be remembered that the values in the chart and table are for new conditions and with time the pipe roughness may increase.

**Table 7-1. Manning's coefficients for storm drain conduits.**

| CONDUIT MATERIAL | MANNING COEFFICIENT |
|---|---|
| 1. Concrete pipe | 0.011 - 0.013 |
| 2. Corrugated metal pipe or pipe arch: | |
| A. 60 by 12 mm (2.375 by 0.5 in) corrugations | |
| i. Plain or fully coated | 0.024 |
| ii. Paved invert (range represents 25 and 50 percent of circumference paved): | |
| (a) Full flow depth | 0.021 - 0.018 |
| (b) Flow 80 percent of depth | 0.021 - 0.016 |
| (c) Flow 60 percent of depth | 0.019 - 0.013 |
| B. 75 by 25 mm (3 by 1 in) corrugations | 0.027 |
| C. 150 by 50 mm (6 by 2 in) corrugations | 0.032 |
| D. Spiral rib | 0.012 - 0.013 |
| E. Helically Wound - Diameter, mm (in) | |
| 305 (12) | 0.013 |
| 381 (15) | 0.014 |
| 457 (18) | 0.015 |
| 533 (21) | 0.016 |
| 610 (24) | 0.017 |
| 686 (27) | 0.018 |
| 762 (30) | 0.019 |
| 838 (33) | 0.020 |
| 914 (36) | 0.021 |
| 1067 (42) | 0.022 |
| 1219 (48) | 0.023 |
| 3. Plastic Pipe | |
| A. Smooth | 0.011 - 0.015 |
| B. Corrugated | 0.024 |
| 4. Vitrified clay pipe | 0.012 - 0.014 |
| 5. Cast-iron pipe, uncoated | 0.013 |
| 6. Steel pipe | 0.009 - 0.011 |
| 7. Brick | 0.014 - 0.017 |
| 8. Monolithic concrete | |
| A. Wood forms, rough | 0.015 - 0.017 |
| B. Wood forms, smooth | 0.012 - 0.014 |
| C. Steel forms | 0.012 - 0.014 |

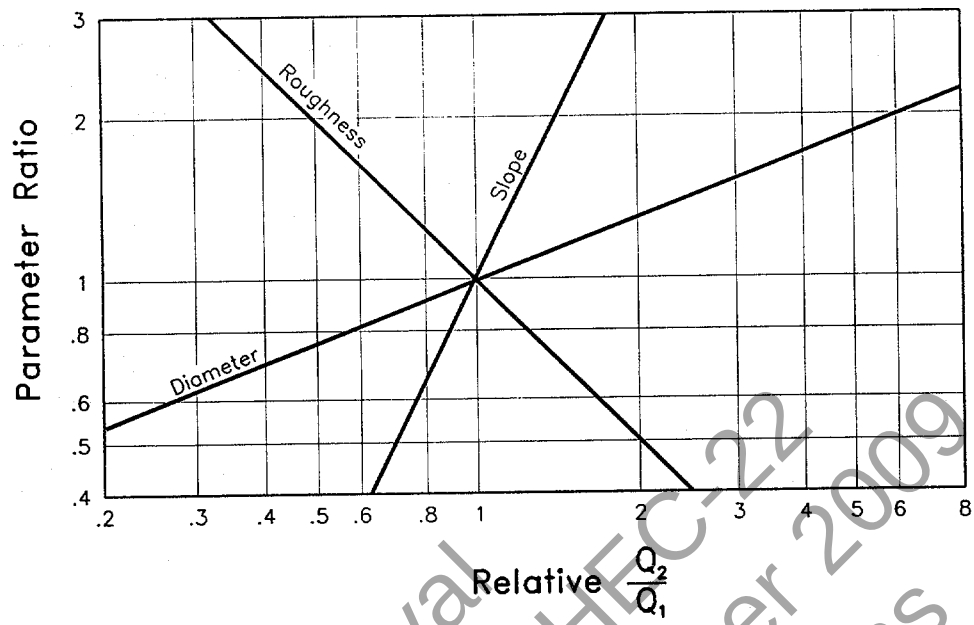


**Figure 7-1. Storm drain capacity sensitivity.**



Figure 7-1 illustrates storm drain capacity sensitivity to the parameters in the Manning equation. This figure can be used to study the effect changes in individual parameters will have on storm drain capacity. For example, if the diameter of a storm drain is doubled, its capacity will be increased by a factor of 6.0; if the slope is doubled, the capacity is increased by a factor of 1.4; however, if the roughness is doubled, the pipe capacity will be reduced by 50 percent.

The hydraulic elements graph in chart 26 is provided to assist in the solution of the Manning equation for part full flow in storm drains. The hydraulic elements chart shows the relative flow conditions at different depths in a circular pipe and makes the following important points:

1. Peak flow occurs at 93 percent of the height of the pipe. This means that if the pipe is designed for full flow, the design will be slightly conservative.
2. The velocity in a pipe flowing half-full is the same as the velocity for full flow.
3. Flow velocities for flow depths greater than half-full are greater than velocities at full flow.
4. As the depth of flow drops below half-full, the flow velocity drops off rapidly.

The shape of a storm drain conduit also influences its capacity. Although most storm drain conduits are circular, a significant increase in capacity can be realized by using an alternate shape. Table 7-2 provides a tabular listing of the increase in capacity which can be achieved using alternate conduit shapes that have the same height as the original circular shape, but have a different cross sectional area. Although these alternate shapes are generally more expensive then circular shapes, their use can be justified in some instances based on their increased capacity.

In addition to the nomograph in chart 25, numerous charts have been developed for conduits having specific shapes, roughness, and sizes. Reference 36 contains a variety of design charts for circular,

**Table 7-2. Increase in capacity of alternate conduit shapes based on a circular pipe with the same height.**

| | AREA (Percent Increase) | CONVEYANCE (Percent Increase) |
|---|---|---|
| Circular | - | - |
| Oval | 63 | 87 |
| Arch | 57 | 78 |
| Box (B = D) | 27 | 27 |
| Box (B = 2D) | 154 | 208 |

arched, and oval conduits that are commonly used in the design of storm drainage systems.

***Example 7-1***

***Given:*** *$Q = 0.50\ m^3/s\ (17.6\ ft^3/s)$*
*$S_o = 0.015\ m/m\ (ft/ft)$*

***Find:*** *The pipe diameter needed to convey the indicated design flow. Consider use of both concrete and helically wound corrugated metal pipes.*

***Solution:***

*(1) Concrete pipe.*

*Using equation 7-1 or chart 25 with n = 0.013 for concrete*

$D = [(Q\ n)/(K_Q\ S_o^{0.5})]^{0.375}$
$D = [(0.50)(0.013)/\{(0.312)(0.015)^{0.5}\}]^{0.375}$
$D = 0.51\ m = 514\ mm\ (20.2\ in)$
*Use D = 533 mm (21 in) diameter standard pipe size.*

*(2) Helically wound metal pipe.*

*Using equation 7-1 or chart 25*

*Assume n = 0.017*
$D = [(Q\ n)/(K_Q\ S_o^{0.5})]^{0.375}$
$D = [(0.50)(0.017)/\{(0.312)(0.015)^{0.5}\}]^{0.375}$
$D = 0.57\ m = 569\ mm\ (22.4\ in)$
*Use D = 610 mm (24 in) diameter standard size. (Note: The n value for 610 mm = 0.017. The pipe size and n value must coincide as shown in table 7-1.)*

*A computer solution for both parts 1 and 2 of this example is presented in appendix B.*

***Example 7-2***

***Given:*** *The concrete and helically wound corrugated pipes in example 7-1.*

***Find:*** *The full flow pipe capacity and velocity.*

***Solution:*** *Use equation 7-1 or chart 25.*

*(1) Concrete pipe.*

$$Q = (K_Q/n)\ D^{2.67}\ S_o^{0.5}$$
$$Q = (0.312)/(0.013)\ (0.533)^{2.67}\ (0.015)^{0.5}$$
$$Q = 0.55\ m^3/s\ (19.3\ ft^3/s)$$

$$V = (K_V/n)\ D^{0.67}\ S_o^{0.5}$$
$$V = (0.397)/(0.013)\ (0.533)^{0.67}\ (0.015)^{0.5}$$
$$V = 2.45\ m/s\ (8.0\ ft/s)$$

*(2) Helically wound corrugated pipe.*

$$Q = (K_Q/n)\ D^{2.67}\ S_o^{0.5}$$
$$Q = (0.312)/(0.017)\ (0.610)^{2.67}\ (0.015)^{0.5}$$
$$Q = 0.60\ m^3/s\ (21.2\ ft^3/s)$$

$$V = (K_V/n)\ D^{0.67}\ S_o^{0.5}$$
$$V = (0.397)/(0.017)\ (0.610)^{0.67}\ (0.015)^{0.5}$$
$$V = 2.05\ m/s\ (6.7\ ft/s)$$

*A computer solution for both parts 1 and 2 of this example is presented in appendix B.*



### 7.1.4 Hydraulic Grade Line

The hydraulic grade line (HGL) is a line coinciding with the level of flowing water at any point along an open channel. In closed conduits flowing under pressure, the hydraulic grade line is the level to which water would rise in a vertical tube at any point along the pipe. The hydraulic grade line is used to aid the designer in determining the acceptability of a proposed storm drainage system by establishing the elevation to which water will rise when the system is operating under design conditions.

HGL, a measure of flow energy, is determined by subtracting the velocity head ($V^2/2g$) from the energy gradient (or energy grade line). Energy concepts were introduced in chapter 5, and can be applied to pipe flow as well as open channel flow. Figure 7-2 illustrates the energy and hydraulic grade lines for open channel and pressure flow in pipes. As illustrated in figure 7-2, if the HGL is above the inside top (crown) of the pipe, pressure flow conditions exist. Conversely, if the HGL is below the crown of the pipe, open channel flow conditions exist.

When water is flowing through the pipe and there is a space of air between the top of the water and the inside of the pipe, the flow is considered as open channel flow and the HGL is at the water surface. When the pipe is flowing full under pressure flow, the HGL will be above the crown of the pipe. When the flow in the pipe just reaches the point where the pipe is flowing full, this condition lies in between

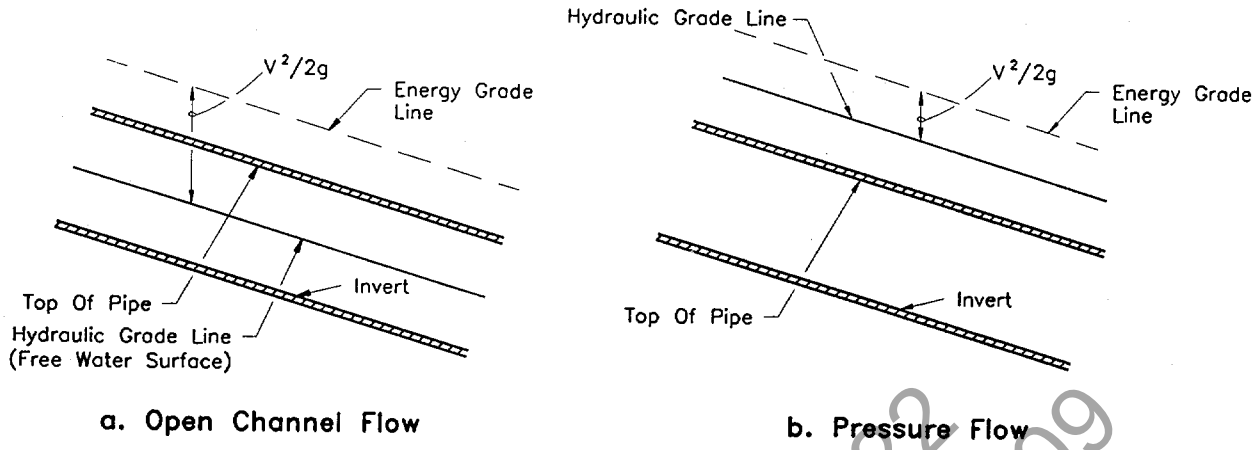


**Figure 7-2. Hydraulic and energy grade lines in pipe flow.**

open channel flow and pressure flow. At this condition the pipe is under gravity flow and the flow is influenced by the resistance of the total circumference of the pipe. Under gravity flow, the HGL coincides with the crown of the pipe.

A special concern with storm drains designed to operate under pressure flow is that inlet surcharging and possible access hole lid displacement can occur if the hydraulic grade line rises above the ground surface. A design based on open channel conditions must be carefully planned as well, including evaluation of the potential for excessive and inadvertent flooding created when a storm event larger than the design storm pressurizes the system. As hydraulic calculations are performed, frequent verification of the existence of the desired flow condition should be made. Storm drainage systems can often alternate between pressure and open channel flow conditions from one section to another.

A detailed procedure for evaluating the hydraulic grade line for storm drainage systems is presented in section 7.5.

### 7.1.5 Storm Drain Outfalls

All storm drains have an outlet where flow from the storm drainage system is discharged. The discharge point can be a natural river or stream, an existing storm drainage system, or a channel which is either existing or proposed for the purpose of conveying the storm water away from the highway. The procedure for calculating the hydraulic grade line through a storm drainage system begins at the outfall. Therefore, consideration of outfall conditions is an important part of storm drain design.

Several aspects of outfall design must be given serious consideration. These include the flowline or invert (inside bottom) elevation of the proposed storm drain outlet, tailwater elevations, the need for energy dissipation, and the orientation of the outlet structure.

**The flowline or invert elevation** of the proposed outlet should be equal to or higher than the flowline of the outfall. If this is not the case, there may be a need to pump or otherwise lift the water to the elevation of the outfall.

**The tailwater depth or elevation** in the storm drain outfall must be considered carefully. Evaluation of the hydraulic grade line for a storm drainage system begins at the system outfall with the tailwater elevation. For most design applications, the tailwater will either be above the crown of the outlet or can be considered to be between the crown and critical depth of the outlet. The tailwater may also occur between the critical depth and the invert of the outlet, however, the starting point for the hydraulic grade line determination should be either the design tailwater elevation or $(d_c + D)/2$, whichever is highest.

An exception to the above rule would be for a very large outfall with low tailwater where a water surface profile calculation would be appropriate to determine the location where the water surface will intersect the top of the barrel and full flow calculations can begin. In this case, the downstream water surface elevation would be based on critical depth or the design tailwater elevation, whichever was highest.

If the outfall channel is a river or stream, it may be necessary to consider the joint or coincidental probability of two hydrologic events occurring at the same time to adequately determine the elevation of the tailwater in the receiving stream. The relative independence of the discharge from the storm drainage system can be qualitatively evaluated by a comparison of the drainage area of the receiving stream to the area of the storm drainage system. For example, if the storm drainage system has a drainage area much smaller than that of the receiving stream, the peak discharge from the storm drainage system may be out of phase with the peak discharge from the receiving watershed. Table 7-3 provides a comparison of discharge frequencies for coincidental occurrence for a 10 year and 100 year design storm. This table can be used to establish an appropriate design tailwater elevation for a storm drainage system based on the expected coincident storm frequency on the outfall channel. For example, if the receiving stream has a drainage area of 200 hectares and the storm drainage system has a drainage area of 2 hectares, the ratio of receiving area to storm drainage area is 200 to 2 which equals 100 to 1. From table 7-3 and considering a 10 year design storm occurring over both areas, the flow rate in the main stream will be equal to that of a five year storm when the drainage system flow rate reaches its 10 year peak flow at the outfall. Conversely, when the flow rate in the main channel reaches its 10 year peak flow rate, the flow rate from the storm drainage system will have fallen to the 5 year peak flow rate discharge. This is because the drainage areas are different sizes, and the time to peak for each drainage area is different.

There may be instances in which an excessive tailwater causes flow to back up the storm drainage system and out of inlets and access holes, creating unexpected and perhaps hazardous flooding conditions. The potential for this should be considered. Flap gates placed at the outlet can sometimes alleviate this condition; otherwise, it may be necessary to isolate the storm drain from the outfall by use of a pump station.

**Energy dissipation** may be required to protect the storm drain outlet. Protection is usually required at the outlet to prevent erosion of the outfall bed and banks. Riprap aprons or energy dissipators should be provided if high velocities are expected. See HEC-14, "Hydraulic Design of Energy Dissipators for Culverts and Channels"[35] for guidance with designing an appropriate dissipator.

The **orientation of the outfall** is another important design consideration. Where practical, the outlet of the storm drain should be positioned in the outfall channel so that it is pointed in a downstream direction. This will reduce turbulence and the potential for excessive erosion. If the outfall structure can not be oriented in a downstream direction, the potential for outlet scour must be considered. For

**Table 7-3. Frequencies for coincidental occurrence.**

| AREA RATIO | FREQUENCIES FOR COINCIDENTAL OCCURRENCE | | | |
|---|---|---|---|---|
| | 10 Year Design | | 100 Year Design | |
| | main stream | tributary | main stream | tributary |
| 10,000 to 1 | 1<br>10 | 10<br>1 | 2<br>100 | 100<br>2 |
| 1,000 to 1 | 2<br>10 | 10<br>2 | 10<br>100 | 100<br>10 |
| 100 to 1 | 5<br>10 | 10<br>5 | 25<br>100 | 100<br>25 |
| 10 to 1 | 10<br>10 | 10<br>10 | 50<br>100 | 100<br>50 |
| 1 to 1 | 10<br>10 | 10<br>10 | 100<br>100 | 100<br>100 |



example, where a storm drain outfall discharges perpendicular to the direction of flow of the receiving channel, care must be taken to avoid erosion on the opposite channel bank. If erosion potential exists, a channel bank lining of riprap or other suitable material should be installed on the bank. Alternatively, an energy dissipator structure could be used at the storm drain outlet.

### 7.1.6 Energy Losses

Prior to computing the hydraulic grade line, all energy losses in pipe runs and junctions must be estimated. In addition to the principal energy involved in overcoming the friction in each conduit run, energy (or head) is required to overcome changes in momentum or turbulence at outlets, inlets, bends, transitions, junctions, and access holes. The following sections present relationships for estimating typical energy losses in storm drainage systems. The application of some of these relationships is included in the design example in section 7.6.

#### 7.1.6.1 Pipe Friction Losses

The major loss in a storm drainage system is the friction or boundary shear loss. The head loss due to friction in a pipe is computed as follows:

$$H_f = S_f L \tag{7-2}$$

where: $H_f$ = friction loss, m (ft)
$S_f$ = friction slope, m/m (ft/ft)
$L$ = length of pipe, m (ft)

The friction slope in equation 7-2 is also the slope of the hydraulic gradient for a particular pipe run. As indicated by equation 7-2, the friction loss is simply the hydraulic gradient multiplied by the length of the run. Pipe friction losses can be determined by combining equation 7-2 with equation 7-1 as follows:

$$S_f = \frac{H_f}{L} = \left(\frac{Q\,n}{K_Q\,D^{2.67}}\right)^2 \tag{7-3}$$

7.1.6.2 Exit Losses

The exit loss from a storm drain outlet is a function of the change in velocity at the outlet of the pipe. For a sudden expansion such as at an endwall, the exit loss is:

$$H_o = 1.0\left(\frac{V_o^2}{2g} - \frac{V_d^2}{2g}\right) \tag{7-4}$$

where: $V_o$ = average outlet velocity
$V_d$ = channel velocity downstream of outlet

Note that when $V_d = 0$, as in a reservoir, the exit loss is one velocity head. For part full flow where the pipe outlets in a channel with water moving in the same direction as the outlet water, the exit loss may be reduced to virtually zero.

7.1.6.3 Bend Losses

The bend loss coefficient for storm drain design is minor but can be estimated using the following formula[18]:

$$h_b = 0.0033\,(\Delta)\left(\frac{V^2}{2g}\right) \tag{7-5}$$

where: $\Delta$ = angle of curvature in degrees

7.1.6.4 Transition Losses

A transition is a location where a conduit or channel changes size. Typically transitions should be avoided and access holes should be used when pipe size increases. However, sometimes transitions are unavoidable. Transitions include expansions, contractions, or both. In small storm drains, transitions may be confined within access holes. However, in larger storm drains or when a specific need arises, transitions may occur within pipe runs as illustrated in figures 6-3, 6-5 and 7-3.

Energy losses in expansions or contractions in non-pressure flow can be expressed in terms of the kinetic energy at the two ends. Contraction and expansion losses can be evaluated with equations 7-6a and 7-6b respectively.

**Table 7-4a. Typical values for $K_e$ for gradual enlargement of pipes in non-pressure flow.**

| $D_2/D_1$ | Angle of Cone | | | | | | |
|---|---|---|---|---|---|---|---|
| | 10° | 20° | 45° | 60° | 90° | 120° | 180° |
| 1.5 | 0.17 | 0.40 | 1.06 | 1.21 | 1.14 | 1.07 | 1.00 |
| 3 | 0.17 | 0.40 | .86 | 1.02 | 1.06 | 1.04 | 1.00 |

$D_2/D_1$ = Ratio of diameter of large pipe to diameter of smaller pipe.
Angle of cone is the angle in degrees between the sides of the tapering section.
(Source: Reference 8)

$$H_c = K_c \left( \frac{V_2^2}{2g} - \frac{V_1^2}{2g} \right) \qquad (7\text{-}6a)$$

$$H_e = K_e \left( \frac{V_1^2}{2g} - \frac{V_2^2}{2g} \right) \qquad (7\text{-}6b)$$

**Table 7-4b. Typical values of $K_c$ for sudden pipe contractions.**

| $D_2/D_1$ | $K_c$ |
|---|---|
| 0 | 0.5 |
| 0.4 | 0.4 |
| 0.6 | 0.3 |
| 0.8 | 0.1 |
| 1.0 | 0.0 |

$D_2/D_1$ = Ratio of diameter of large pipe to small pipe.
(Source: Reference 8)

where:
- $K_e$ = expansion coefficient
- $K_c$ = contraction coefficient ($0.5\ K_e$)
- $V_1$ = velocity upstream of transition
- $V_2$ = velocity downstream of transition
- $g$ = acceleration due to gravity = 9.81 m/s² (32.2 ft/s²)

For gradual contractions, it has been observed that $K_c = 0.5\ K_e$. Typical values of $K_e$ for gradual expansions are tabulated in table 7-4a. Typical values of $K_e$ for sudden contractions are tabulated in table 7-4b. The angle of the cone that forms the transition is defined in figure 7-3.

For storm drain pipes functioning under pressure flow, the loss coefficients listed in tables 7-4c and 7-4d can be used with equations 7-7a for sudden and gradual expansions respectively. For sudden contractions in pipes with pressure flow, the loss coefficients listed in Table 7-4e can be used in conjunction with equation 7-7b[8].

$$H_e = K_e \left(\frac{V_1^2}{2g}\right) \qquad (7\text{-}7a)$$

$$H_c = K_c \left(\frac{V_2^2}{2g}\right) \qquad (7\text{-}7b)$$

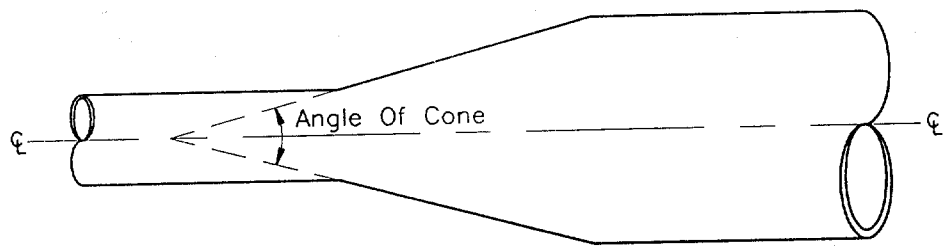


**Figure 7-3. Angle of cone for pipe diameter changes.**



**Table 7-4c. Values of $K_e$ for determining loss of head due to sudden enlargement in pipes.**

| $D_2/D_1$ | Velocity, $V_1$, in meters per second | | | | | | | | | | | | |
|---|---|---|---|---|---|---|---|---|---|---|---|---|---|
| | 0.6 | 0.9 | 1.2 | 1.5 | 1.8 | 2.1 | 2.4 | 3.0 | 3.7 | 4.6 | 6.1 | 9.1 | 12.2 |
| 1.2 | .11 | .10 | .10 | .10 | .10 | .10 | .10 | .09 | .09 | .09 | .09 | .09 | .08 |
| 1.4 | .26 | .26 | .25 | .24 | .24 | .24 | .24 | .23 | .23 | .22 | .22 | .21 | .20 |
| 1.6 | .40 | .39 | .38 | .37 | .37 | .36 | .36 | .35 | .35 | .34 | .33 | .32 | .32 |
| 1.8 | .51 | .49 | .48 | .47 | .47 | .46 | .46 | .45 | .44 | .43 | .42 | .41 | .40 |
| 2.0 | .60 | .58 | .56 | .55 | .55 | .54 | .53 | .52 | .52 | .51 | .50 | .48 | .47 |
| 2.5 | .74 | .72 | .70 | .69 | .68 | .67 | .66 | .65 | .64 | .63 | .62 | .60 | .58 |
| 3.0 | .83 | .80 | .78 | .77 | .76 | .75 | .74 | .73 | .72 | .70 | .69 | .67 | .65 |
| 4.0 | .92 | .89 | .87 | .85 | .84 | .83 | .82 | .80 | .79 | .78 | .76 | .74 | .72 |
| 5.0 | .96 | .93 | .91 | .89 | .88 | .87 | .86 | .84 | .83 | .82 | .80 | .77 | .75 |
| 10.0 | 1.00 | .99 | .96 | .95 | .93 | .92 | .91 | .89 | .88 | .86 | .84 | .82 | .80 |
| ∞ | 1.00 | 1.00 | .98 | .96 | .95 | .94 | .93 | .91 | .90 | .88 | .86 | .83 | .81 |

$D_2/D_1$ = ratio of diameter of larger pipe to smaller pipe
$V_1$ = velocity in smaller pipe
(Source: Reference 8)

**Table 7-4d. Values of $K_e$ for determining loss of head due to gradual enlargement in pipes.**

| $D_2/D_1$ | Angle of Cone | | | | | | | | | | |
|---|---|---|---|---|---|---|---|---|---|---|---|
| | 2° | 6° | 10° | 15° | 20° | 25° | 30° | 35° | 40° | 50° | 60° |
| 1.1 | 0.01 | 0.01 | 0.03 | 0.05 | 0.10 | 0.13 | 0.16 | 0.18 | 0.19 | 0.21 | 0.23 |
| 1.2 | 0.02 | 0.02 | 0.04 | 0.09 | 0.16 | 0.21 | 0.25 | 0.29 | 0.31 | 0.35 | 0.37 |
| 1.4 | 0.02 | 0.03 | 0.06 | 0.12 | 0.23 | 0.30 | 0.36 | 0.41 | 0.44 | 0.50 | 0.53 |
| 1.6 | 0.03 | 0.04 | 0.07 | 0.14 | 0.26 | 0.35 | 0.42 | 0.47 | 0.51 | 0.57 | 0.61 |
| 1.8 | 0.03 | 0.04 | 0.07 | 0.15 | 0.28 | 0.37 | 0.44 | 0.50 | 0.54 | 0.61 | 0.65 |
| 2.0 | 0.03 | 0.04 | 0.07 | 0.16 | 0.29 | 0.38 | 0.46 | 0.52 | 0.56 | 0.63 | 0.68 |
| 2.5 | 0.03 | 0.04 | 0.08 | 0.16 | 0.30 | 0.39 | 0.48 | 0.54 | 0.58 | 0.65 | 0.70 |
| 3.0 | 0.03 | 0.04 | 0.08 | 0.16 | 0.31 | 0.40 | 0.48 | 0.55 | 0.59 | 0.66 | 0.71 |
| inf | 0.03 | 0.05 | 0.08 | 0.16 | 0.31 | 0.40 | 0.49 | 0.56 | 0.60 | 0.67 | 0.72 |

$D_2/D_1$ = ratio of diameter of larger pipe to diameter of smaller pipe.
Angle of cone is the angle in degrees between the sides of the tapering section.
(Source: Reference 8)



**Table 7-4e. Values of $K_e$ for determining loss of head due to sudden contraction.**

| $D_2/D_1$ | Velocity, $V_1$, in feet per second | | | | | | | | | | | | |
|---|---|---|---|---|---|---|---|---|---|---|---|---|---|
| | 0.6 | 0.9 | 1.2 | 1.5 | 1.8 | 2.1 | 2.4 | 3.0 | 3.7 | 4.6 | 6.1 | 9.1 | 12.2 |
| 1.1 | .03 | .04 | .04 | .04 | .04 | .04 | .04 | .04 | .04 | .04 | .05 | .05 | .06 |
| 1.2 | .07 | .07 | .07 | .07 | .07 | .07 | .07 | .08 | .08 | .08 | .09 | .10 | .11 |
| 1.4 | .17 | .17 | .17 | .17 | .17 | .17 | .17 | .18 | .18 | .18 | .18 | .19 | .20 |
| 1.6 | .26 | .26 | .26 | .26 | .26 | .26 | .26 | .26 | .26 | .26 | .25 | .25 | .24 |
| 1.8 | .34 | .34 | .34 | .34 | .34 | .34 | .33 | .33 | .32 | .32 | .32 | .29 | .27 |
| 2.0 | .38 | .38 | .37 | .37 | .37 | .37 | .36 | .36 | .35 | .34 | .33 | .31 | .29 |
| 2.2 | .40 | .40 | .40 | .39 | .39 | .39 | .39 | .38 | .37 | .37 | .35 | .33 | .30 |
| 2.5 | .42 | .42 | .42 | .41 | .41 | .41 | .40 | .40 | .39 | .38 | .37 | .34 | .31 |
| 3.0 | .44 | .44 | .44 | .43 | .43 | .43 | .42 | .42 | .41 | .40 | .39 | .36 | .33 |
| 4.0 | .47 | .46 | .46 | .46 | .45 | .45 | .45 | .44 | .43 | .42 | .41 | .37 | .34 |
| 5.0 | .48 | .48 | .47 | .47 | .47 | .46 | .46 | .45 | .45 | .44 | .42 | .38 | .35 |
| 10.0 | .49 | .48 | .48 | .48 | .48 | .47 | .47 | .46 | .46 | .45 | .43 | .40 | .36 |
| ∞ | .49 | .49 | .48 | .48 | .48 | .47 | .47 | .47 | .46 | .45 | .44 | .41 | .38 |

$D_2/D_1$ = ratio of diameter of larger to smaller ratio
$V_2$ = velocity in smaller pipe
(Source: Reference 8)

### 7.1.6.5 Junction Losses

A pipe junction is the connection of a lateral pipe to a larger trunk pipe without the use of an access hole structure. The minor loss equation for a pipe junction is a form of the momentum equation as follows:

$$H_j = \frac{(Q_o V_o) - (Q_i V_i) - (Q_l V_l \cos\theta)}{0.5\ g\ (A_o + A_i)} + h_i - h_o \qquad (7\text{-}8)$$

where:

| | | |
|---|---|---|
| $H_j$ | = | junction loss, m (ft) |
| $Q_o$, $Q_i$, $Q_l$ | = | outlet, inlet, and lateral flows respectively, $m^3/s$ ($ft^3/s$) |
| $V_o$, $V_i$, $V_l$ | = | outlet, inlet, and lateral velocities, respectively, m/s (ft/s) |
| $h_o$, $h_i$ | = | outlet and inlet velocity heads, m (ft) |
| $A_o$, $A_i$ | = | outlet and inlet cross-sectional areas, $m^2$, ($ft^2$) |
| $\theta$ | = | the angle between the inflow and outflow pipes (see figure 7-4). |

### 7.1.6.6 Inlet and Access Hole Losses - Preliminary Estimate

An approximate method for computing losses at access holes or inlet structures involves multiplying the velocity head of the outflow pipe by a coefficient as represented in equation 7-9. Applicable coefficients (K) are tabulated in table 7-5a. This method can be used to estimate the initial pipe crown drop across an access hole or inlet structure to offset energy losses at the structure. The crown drop is then used to establish the appropriate pipe invert elevations, as demonstrated in example 7-3. However, this method is only for preliminary estimation and should not be used for the actual design process.

$$H_{ah} = K_{ah}\left(\frac{V_o^2}{2g}\right) \qquad (7\text{-}9)$$

### 7.1.6.7 Inlet and Access Hole Losses - Energy-Loss Methodology

Two (2) methodologies have been advanced for evaluating losses at access holes and other flow junctions, the energy loss and power loss methods. Both methods are based on laboratory research and do not apply when the inflow pipe invert is above the water level in the access hole. This section presents the energy loss methodology.

The energy loss encountered going from one pipe to another through an access hole is commonly represented as being proportional to the velocity head of the outlet pipe. Using K to represent the constant of proportionality, the energy loss, $H_{ah}$, is approximated by equation 7-10. Experimental studies have determined that the K value can be approximated by the relationship in equation 7-11 when the inflow pipe invert is below the water level in the access hole.

$$H_{ah} = K\left(\frac{V_o^2}{2g}\right) \qquad (7\text{-}10)$$

$$K = K_o\, C_D\, C_d\, C_Q\, C_p\, C_B \qquad (7\text{-}11)$$

where:
- $K$ = adjusted loss coefficient
- $K_o$ = initial head loss coefficient based on relative access hole size
- $C_D$ = correction factor for pipe diameter (pressure flow only)
- $C_d$ = correction factor for flow depth
- $C_Q$ = correction factor for relative flow
- $C_p$ = correction factor for plunging flow
- $C_B$ = correction factor for benching
- $V_o$ = velocity of outlet pipe

**Table 7-5a. Head loss coefficients** [40]

| STRUCTURE CONFIGURATION | $K_{ah}$ |
|---|---|
| Inlet - straight run | 0.50 |
| Inlet - angled through | |
| 90° | 1.50 |
| 60° | 1.25 |
| 45° | 1.10 |
| 22.5° | 0.70 |
| Manhole - straight run | 0.15 |
| Manhole - angled through | |
| 90° | 1.00 |
| 60° | 0.85 |
| 45° | 0.75 |
| 22.5° | 0.45 |

For cases where the inflow pipe invert is above the access hole water level, the outflow pipe will function as a culvert, and the access hole loss and the access hole HGL can be computed using procedures found in *Hydraulic Design of Highway Culverts* (HDS-5)[2]. If the outflow pipe is flowing full or partially full under outlet control, the access hole loss (due to flow contraction into the outflow pipe) can be computed by setting K in equation 7-10 to $K_e$ as reported in Table 7-5b. If the outflow pipe is flowing under inlet control, the water depth in the access hole should be computed using the inlet control nomographs in HDS- 5 (for example see charts 28 and 29).

The initial head loss coefficient, $K_o$ in equation 7-11, is estimated as a function of the **relative access hole** size and the angle of deflection between the inflow and outflow pipes as represented in equation 7-12. This deflection angle is represented in figure 7-4.

$$K_o = 0.1\left(\frac{b}{D_o}\right)(1-\sin\theta) + 1.4\left(\frac{b}{D_o}\right)^{0.15}\sin\theta \qquad (7\text{-}12)$$

where:
- $\theta$ = the angle between the inflow and outflow pipes (see figure 7-4)
- $b$ = access hole or junction diameter
- $D_o$ = outlet pipe diameter

A change in head loss due to differences in **pipe diameter** is only significant in pressure flow situations when the depth in the access hole to outlet pipe diameter ratio, $d_{aho}/D_o$, is greater than 3.2. In these cases a correction factor for pipe diameter, $C_D$, is computed using equation 7-13. Otherwise $C_D$ is set equal to 1.

**Table 7-5b. Entrance loss coefficients for culverts; outlet control, full or partly full entrance head loss.**

| Type of Structure and Design of Entrance | Coefficient $K_e$ |
|---|---|
| *Pipe, Concrete* | |
| Projecting from fill, socket end (groove-end) | 0.2 |
| Projecting from fill, sq. cut end | 0.5 |
| Headwall or headwall and wingwalls | |
| Socket end of pipe (groove-end) | 0.2 |
| Square-edge | 0.5 |
| Rounded (radius = 1/12 D) | 0.2 |
| Mitered to conform to fill slope | 0.7 |
| *End-section conforming to fill slope | 0.5 |
| Beveled edges, 33.7° or 45° levels | 0.2 |
| Side-or slope-tapered inlet | 0.2 |
| *Pine, or Pipe-Arch, Corrugated Metal* | |
| Project from fill (no headwall) | 0.9 |
| Headwall or headwall and wingwalls square-edge | 0.5 |
| Mitered to conform to fill slope, paved or unpaved slope | 0.7 |
| *End-section conforming to fill slope | 0.5 |
| Beveled edges, 33.7° or 45° bevels | 0.2 |
| Side-or slope-tapered inlet | 0.2 |
| *Box, Reinforced Concrete* | |
| Headwall parallel to embankment (no wingwalls) | |
| Square-edged on 3 edges | 0.5 |
| Rounded on 3 edges to radius of 1/12 barrel dimension, or beveled edges on 3 sides | 0.2 |
| Wingwalls at 30° to 75° to barrel | |
| Square-edged at crown | 0.4 |
| Crown edge rounded to radius of 1/2 barrel dimension, or beveled top edge | 0.2 |
| Wingwall at 10° to 25° to barrel | |
| Square-edged at crown | 0.5 |
| Wingwalls parallel (extension of sides) | |
| Square-edged at crown | 0.7 |
| Side-or slope-tapered inlet | 0.2 |

*Note: "End-section conforming to fill slope," made of either metal or concrete, are the sections commonly available from manufacturers. From limited hydraulic tests they are equivalent in operation to a headwall in both *inlet* and *outlet* control. Some end sections, incorporating a *closed* tape in their design have a superior hydraulic performance.
(Source: Reference 2)

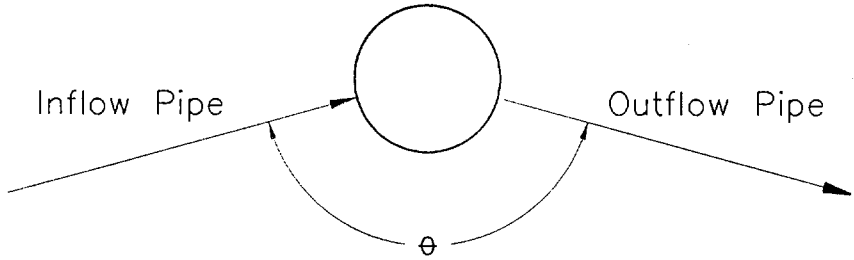


**Figure 7-4. Deflection angle.**

$$C_D = \left(\frac{D_o}{D_i}\right)^3 \tag{7-13}$$

where: $D_o$ = outgoing pipe diameter
$D_i$ = inflowing pipe diameter

The correction factor for **flow depth**, $C_d$, is significant only in cases of free surface flow or low pressures, when the $d_{aho}/D_o$ ratio is less than 3.2. In cases where this ratio is greater than 3.2, $C_d$ is set equal to 1. To determine the applicability of this factor, the water depth in the access hole is approximated as the level of the hydraulic grade line at the upstream end of the outlet pipe. The correction factor is calculated using equation 7-14.

$$C_d = 0.5\left(\frac{d_{aho}}{D_o}\right)^{0.6} \tag{7-14}$$

where: $d_{aho}$ = water depth in access hole above the outlet pipe invert
$D_o$ = outlet pipe diameter

The correction factor for **relative flow**, $C_Q$, is a function of the angle of the incoming flow as well as the percentage of flow coming in through the pipe of interest versus other incoming pipes. It is computed using equation 7-15. The correction factor is only applied to situations where there are 3 or more pipes entering the structure at approximately the same elevation. Otherwise, the value of $C_Q$ is equal to 1.0.

$$C_Q = (1-2\sin\theta)\left(1-\frac{Q_i}{Q_o}\right)^{0.75} + 1 \tag{7-15}$$

where: $C_Q$ = correction factor for relative flow
$\theta$ = the angle between the inflow and outflow pipes (see figure 7-4)
$Q_i$ = flow in the inflow pipe
$Q_o$ = flow in the outflow pipe

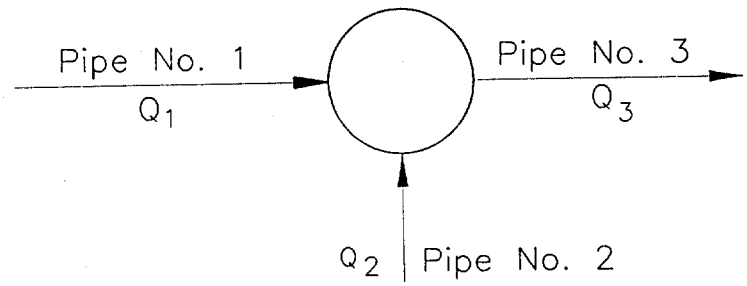


**Figure 7-5. Relative flow effect.**



As can be seen from equation 7-15, $C_Q$ is a function of the angle of the incoming flow as well as the percentage of inflow coming through the pipe of interest versus other incoming pipes. To illustrate this effect, consider the access hole shown in figure 7-5 and assume the following two cases to determine the correction factor of pipe number 2 entering the access hole. For each of the two cases, the angle between the inflow pipe number 1 and the outflow pipe, $\theta$, is 180°.

Case 1: $Q_1 = 0.9\ m^3/s\ (3\ ft^3/s)$
$Q_2 = 0.3\ m^3/s\ (1\ ft^3/s)$
$Q_3 = 1.2\ m^3/s\ (4\ ft^3/s)$
Using equation 7-15,

$$C_Q = (1 - 2 \sin \theta)(1 - Q_i/Q_o)^{0.75} + 1$$

$$C_Q = (1 - 2 \sin 180°)(1 - 0.9/1.2)^{0.75} + 1$$

$$C_Q = 1.35$$

Case 2: $Q_1 = 0.3\ m^3/s\ (1\ ft^3/s)$
$Q_2 = 0.9\ m^3/s\ (3\ ft^3/s)$
$Q_3 = 1.2\ m^3/s\ (4\ ft^3/s)$

Using equation 7-15, $C_Q = (1 - 2 \sin \theta)(1 - Q_i/Q_o)^{0.75} + 1$

$$C_Q = (1 - 2 \sin 180°)(1 - 0.3/1.2)^{0.75} + 1$$

$$C_Q = 1.81$$

The correction factor for **plunging flow**, $C_p$, is calculated using equation 7-16. This correction factor corresponds to the effect another inflow pipe, plunging into the access hole, has on the inflow pipe for which the head loss is being calculated. Using the notations in figure 7-5, $C_p$ is calculated for pipe #1 when pipe #2 discharges plunging flow. The correction factor is only applied when $h > d_{aho}$. Additionally, the correction factor is only applied when a higher elevation flow plunges into an access hole that has both an inflow line and an outflow in the bottom of the access hole. Otherwise, the value of $C_p$ is equal to 1.0.

**Table 7-6. Correction for benching.**

| Bench Type | Correction Factors, $C_B$ | |
|---|---|---|
| | Submerged * | Unsubmerged ** |
| Flat or Depressed Floor | 1.00 | 1.00 |
| Half Bench | 0.95 | 0.15 |
| Full Bench | 0.75 | 0.07 |

* pressure flow, $d_{aho}/D_o > 3.2$
** free surface flow, $d_{aho}/D_o < 1.0$

$$C_p = 1 + 0.2\left(\frac{h}{D_o}\right)\left(\frac{h - d_{aho}}{D_o}\right) \tag{7-16}$$

where: $C_p$ = correction for plunging flow
$h$ = vertical distance of plunging flow from the flow line of the higher elevation inlet pipe to the center of the outflow pipe.
$D_o$ = outlet pipe diameter
$d_{aho}$ = water depth in access hole relative to the outlet pipe invert

The correction for **benching** in the access hole, $C_B$, is obtained from table 7-6. Figure 7-6 illustrates benching methods listed in table 7-6. Benching tends to direct flow through the access hole, resulting in a reduction in head loss. For flow depths between the submerged and unsubmerged conditions, a linear interpolation is performed.

In summary, to estimate the head loss through an access hole from the outflow pipe to a particular inflow pipe using the energy-loss method, multiply the above correction factors together to get the head loss coefficient, K. This coefficient is then multiplied by the velocity head in the outflow pipe to estimate the minor loss for the connection.

7.1.6.8 Inlet and Access Hole Losses - Power-Loss Methodology

The power-loss methodology was developed in response to the need for an energy loss relationship which would cover the wide range of flow conditions which occur in access holes [42]. This procedure estimates energy losses at access holes for free-surface, transitional, and pressure flows. Two-pipe, three-pipe, and four-pipe configurations were evaluated during development of the methodology.

The power-loss methodology is based on the premise that minor energy losses through an access hole can be determined using a conservation of power concept. The power entering the access hole can be equated to the sum of the outflow power and the power lost. The solution of the equation involves selection of an initial value of the depth of flow in the access hole, $d_{aho}$, and computation of the inflow power, outflow power, and the power loss in the access hole until the equality is achieved. Computation of losses are dependent on the initial value of $d_{aho}$ selected and the adjusted $d_{aho}$ values determined during the iterative processes.

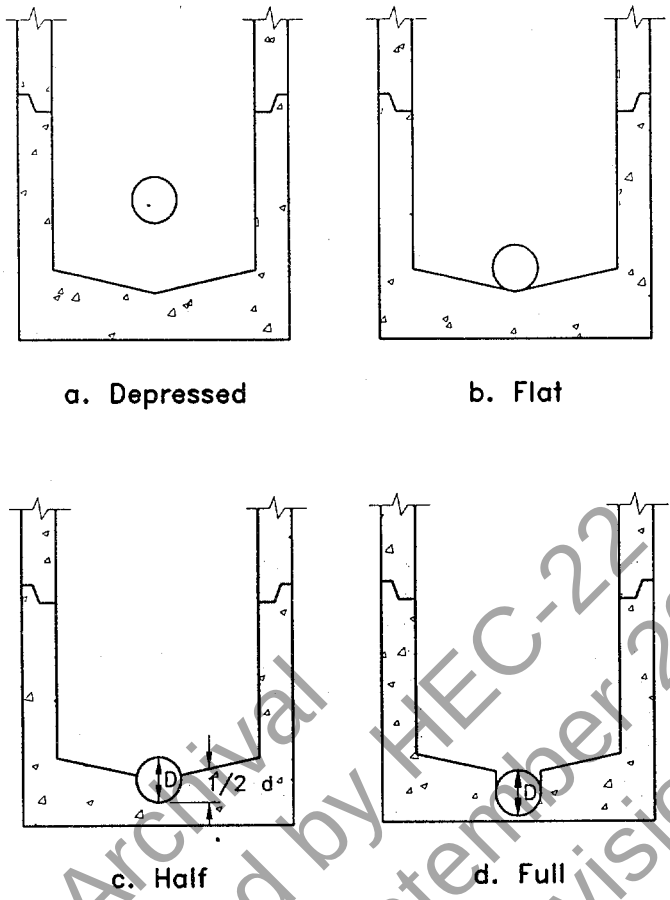


**Figure 7-6. Access hole benching methods.**



The power-loss methodology requires execution of a complex series of iterative computations. This procedure is further complicated by the fact that during the iterative process, it is possible for inflow pipes to fluctuate from being submerged to plunging and vice versa. This fluctuation alters the computational procedure for determining the energy loss since components of the energy loss are dependent on the submerged or plunging status of the inflow pipes.

Due to its complex iterative nature, the Power-loss methodology is not conveniently adaptable to hand computations. However, the methodology is presented in appendix D and is readily adaptable to computer solution techniques, such as are implemented in HYDRA [43].

## 7.2 DESIGN GUIDELINES AND CONSIDERATIONS

Design criteria and considerations describe the limiting factors that qualify an acceptable design. Several of these factors, including design and check storm frequency, time of concentration and discharge determination, allowable highwater at inlets and access holes, minimum flow velocities, minimum pipe grades, and alignment, are discussed in the following sections.

### 7.2.1 Design Storm Frequency

The storm drain conduit is one of the most expensive and permanent elements within storm drainage systems. Storm drains normally remain in use longer than any other system elements. Once installed,

it is very expensive to increase the capacity or repair the line. Consequently, the design flood frequency for projected hydrologic conditions should be selected to meet the need of the proposed facility both now and well into the future.

Most state highway agencies consider a **10-year frequency storm as a minimum** for the design of storm drains on interstate and major highways in urban areas. However, caution should be exercised in selecting an appropriate storm frequency. Consideration should be given to traffic volume, type and use of roadway, speed limit, flood damage potential, and the needs of the local community.

Storm drains which drain **sag points** where runoff can only be removed through the storm drainage system **should be designed for a minimum 50-year frequency storm**. The inlet at the sag point as well as the storm drain pipe leading from the sag point must be sized to accommodate this additional runoff. This can be done by computing the bypass occurring at each inlet during a 50 year rainfall and accumulating it at the sag point. Another method would be to design the upstream system for a 50 year design to minimize the bypass to the sag point. Each case must be evaluated on its own merits and the impacts and risk of flooding a sag point assessed.

Following the initial design of a storm drainage system, it is prudent to evaluate the system using a higher check storm. **A 100-year frequency storm is recommended for the check storm.** The check storm is used to evaluate the performance of the storm drainage system and determine if the major drainage system is adequate to handle the flooding from a storm of this magnitude.



### 7.2.2 Time of Concentration and Discharge

The rate of discharge at any point in the storm drainage system is not the sum of the inlet flow rates of all inlets above the section of interest. It is generally less than this total. The Rational Method is the most common means of determining design discharges for storm drain design. As discussed in section 3.2.2.3, the time of concentration is very influential in the determination of the design discharge using the Rational Method.

The time of concentration is defined as the period required for water to travel from the most hydraulically distant point of the watershed to the point of interest. The designer is usually concerned with two different times of concentration: one for inlet spacing and the other for pipe sizing. The time of concentration for inlet spacing is the time required for water to flow from the hydraulically most distant point of the unique drainage area contributing only to that inlet. Typically, this is the sum of the times required for water to travel overland to the pavement gutter and along the length of the gutter between inlets. If the total time of concentration to the upstream inlet is less than five minutes, a minimum time of concentration of five minutes is used as the duration of rainfall. The time of concentration for each successive inlet should be determined independently in the same manner as was used for the first inlet.

The time of concentration for pipe sizing is defined as the time required for water to travel from the most hydraulically distant point in the total contributing watershed to the design point. Typically, this time consists of two components: 1) the time for overland and gutter flow to reach the inlet, and 2) the time to flow through the storm drainage system to the point of interest.

The flow path having the longest time of concentration to the point of interest in the storm drainage system will usually define the duration used in selecting the intensity value in the Rational Method. Exceptions to the general application of the Rational Equation exist. For example, a small relatively impervious area within a larger drainage area may have an independent discharge higher than that of the

total area. This anomaly may occur because of the high runoff coefficient (C value) and high intensity resulting from a short time of concentration. If an exception does exist, it can generally be classified as one of two exception scenarios.

The first exception occurs when a highly impervious section exists at the most downstream area of a watershed and the total upstream area flows through the lower impervious area. When this situation occurs, two separate calculations should be made.

- First, calculate the runoff from the total drainage area with its weighted C value and the intensity associated with the longest time of concentration.

- Secondly, calculate the runoff using only the smaller less pervious area. The typical procedure would be followed using the C value for the small less pervious area and the intensity associated with the shorter time of concentration.

The results of these two calculations should be compared and the largest value of discharge should be used for design.

The second exception exists when a smaller less pervious area is tributary to the larger primary watershed. When this scenario occurs, two sets of calculations should also be made.

- First, calculate the runoff from the total drainage area with its weighted C value and the intensity associated with the longest time of concentration.

- Secondly, calculate the runoff to consider how much discharge from the larger primary area is contributing at the same time the peak from the smaller less pervious tributary area is occurring. When the small area is discharging, some discharge from the larger primary area is also contributing to the total discharge. In this calculation, the intensity associated with the time of concentration from the small less pervious area is used. The portion of the larger primary area to be considered is determined by the following equation:

$$A_c = A \frac{t_{c1}}{t_{c2}} \tag{7-17}$$

$A_c$ is the most downstream part of the larger primary area that will contribute to the discharge during the time of concentration associated with the smaller, less pervious area. A is the area of the larger primary area, $t_{c1}$ is the time of concentration of the smaller, less pervious, tributary area, and $t_{c2}$ is the time of concentration associated with the larger primary area as is used in the first calculation. The C value to be used in this computation should be the weighted C value that results from combining C values of the smaller less pervious tributary area and the area $A_c$. The area to be used in the Rational Method would be the area of the less pervious area plus $A_c$. This second calculation should only be considered when the less pervious area is tributary to the area with the longer time of concentration and is at or near the downstream end of the total drainage area.

Finally, the results of these calculations should be compared and the largest value of discharge should be used for design.

### 7.2.3 Maximum Highwater

Maximum highwater is the maximum allowable elevation of the water surface (hydraulic grade line) at any given point along a storm drain. These points include inlets, access holes, or any place where there is access from the storm drain to the ground surface. The maximum highwater at any point should not interfere with the intended functioning of an inlet opening, or reach an access hole cover. Maximum allowable highwater levels should be established along the storm drainage system prior to initiating hydraulic evaluations.

### 7.2.4 Minimum Velocity and Grades

It is desirable to maintain a self-cleaning velocity in the storm drain to prevent deposition of sediments and subsequent loss of capacity. For this reason, storm drains should be designed to maintain full-flow pipe velocities of 0.9 meter per second (3 feet per second) or greater. A review of the hydraulic elements in chart 26 indicates that this criteria results in a minimum flow velocity of 0.6 meters per second (2 feet per second) at a flow depth equal to twenty-five (25) percent of the pipe diameter. Minimum slopes required for a velocity of 0.9 meters per second (3 feet per second) can be computed using the form of the Manning formula given in equation 7-18. Alternately, values in table 7-7 can be used.

$$S = 6.4\left(\frac{nV}{D^{0.67}}\right)^2 \qquad (7\text{-}18)$$

### 7.2.5 Cover

Both minimum and maximum cover limits must be considered in the design of storm drainage systems. Minimum cover limits are established to ensure the conduits structural stability under live and impact loads. With increasing fill heights, dead load becomes the controlling factor.

For highway applications, a minimum cover depth of 0.9 m (3.0 ft) should be maintained where possible. In cases where this criteria can not be met, the storm drains should be evaluated to determine if they are structurally capable of supporting imposed loads. Procedures for analyzing loads on buried structures are outlined in the *Handbook of Steel Drainage and Highway Construction Products* [44] and the *Concrete Pipe Design Manual* [45]. However, in no case should a cover depth less than 0.3 m (1.0 ft) be used.

As indicated above, maximum cover limits are controlled by fill and other dead loads. Height of cover tables are typically available from state highway agencies. Procedures in reference 44 and 45 can be used to evaluate special fill or loading conditions.

### 7.2.6 Location

Most local highway agencies maintain standards for storm drain location. They are normally located a short distance behind the curb or in the roadway near the curb. It is preferable to locate storm drains on public property. On occasion, it may be necessary to locate storm drains on private property in easements. The acquisition of required easements can be costly, and should be avoided wherever possible.

**Table 7-7. Minimum pipe slopes to ensure 0.9 meters per second velocity in storm drains flowing full.**

| Pipe Size mm (in) | Full Pipe Flow $m^3/s$ (cfs) | Minimum Slopes, m/m | | |
|---|---|---|---|---|
| | | n 0.012 | n 0.013 | n 0.024 |
| 200 (8) | 0.03 (1.1) | 0.0064 | 0.0075 | 0.0256 |
| 250 (10) | 0.05 (1.6) | 0.0048 | 0.0056 | 0.0190 |
| 300 (12) | 0.07 (2.4) | 0.0037 | 0.0044 | 0.0149 |
| 380 (15) | 0.10 (3.7) | 0.0028 | 0.0032 | 0.0111 |
| 460 (18) | 0.15 (5.3) | 0.0022 | 0.0026 | 0.0087 |
| 530 (21) | 0.20 (7.2) | 0.0018 | 0.0021 | 0.0071 |
| 610 (24) | 0.27 (9.4) | 0.0015 | 0.0017 | 0.0059 |
| 680 (27) | 0.34 (11.9) | 0.0013 | 0.0015 | 0.0051 |
| 760 (30) | 0.42 (14.7) | 0.0011 | 0.0013 | 0.0044 |
| 840 (33) | 0.50 (17.8) | 0.0010 | 0.0011 | 0.0039 |
| 910 (36) | 0.60 (21.2) | 0.0009 | 0.0010 | 0.0034 |
| 1070 (42) | 0.82 (28.9) | 0.0007 | 0.0008 | 0.0028 |
| 1220 (48) | 1.07 (37.7) | 0.0006 | 0.0007 | 0.0023 |
| 1370 (54) | 1.35 (47.7) | 0.0005 | 0.0006 | 0.0020 |
| 1520 (60) | 1.67 (58.9) | 0.0004 | 0.0005 | 0.0017 |
| 1680 (66) | 2.02 (71.3) | 0.0004 | 0.0005 | 0.0015 |
| 1820 (72) | 2.40 (84.8) | 0.0003 | 0.0004 | 0.0014 |



### 7.2.7 Run Length

The length of individual storm drain runs is dictated by storm drainage system configuration constraints and structure locations. Storm drainage system constraints include inlet locations, access hole and junction locations, etc. These elements were discussed in chapter 6. Where straight runs are possible, maximum run length is generally dictated by maintenance requirements. Table 6-1 identifies maximum run lengths for various pipe sizes.

### 7.2.8 Alignment

Where possible, storm drains should be straight between access holes. However, curved storm drains are permitted where necessary to conform to street layout or avoid obstructions. Pipe sizes smaller than 1200 mm (4 ft) should not be designed with curves. For larger diameter storm drains deflecting the joints to obtain the necessary curvature is not desirable except in very minor curvatures. Long radius bends are available from many suppliers and are the preferable means of changing direction in pipes 1200 mm (4.0 ft) in diameter and larger. The radius of curvature specified should coincide with standard curves available for the type of material being used.

## 7.3 MAINTENANCE CONSIDERATIONS

Design, construction and maintenance are very closely related. It is essential that storm drain maintenance be considered during both design and construction. Common maintenance problems associated with storm drains include debris accumulation, sedimentation, erosion, scour, piping, roadway and embankment settlement, and conduit structural damage.

Clearing accumulated debris and sediment from storm drains is a frequent maintenance requirement. This problem is particularly prevalent during construction. Design considerations related to this problem include ensuring that a minimum full flow velocity of 0.9 m/s (3 ft/s) is maintained throughout the storm drainage system. It is also important that access hole spacing be maintained in accordance with the criteria presented in chapter 6 to ensure adequate access for cleaning.

Scour at storm drain outlets is another frequently reported source of storm drain maintenance needs. Prudent design of riprap aprons or energy dissipators at storm drain outlets can minimize scour problems.

Piping, roadway and embankment settlement, and conduit structural problems can also be avoided through proper design and installation specifications. These problems, when they occur, are usually related to poor construction. Tight specifications along with good construction inspections can help reduce these problems.

Even in a properly designed and constructed storm drainage system, a comprehensive program for storm drain maintenance is essential to the proper functioning of the storm drainage system. A regular in-pipe inspection will detail long term changes and will point out needed maintenance necessary to insure safe and continued operation of the system. The program should include periodic inspections with supplemental inspections following storm events. Since storm drains are virtually all underground, inspection of the system is more difficult than surface facilities. Remote-controlled cameras can be used to inspect small diameter conduits. FHWA's *Culvert Inspection Manual* [41] is a valuable tool for inspecting storm drains or culverts.



## 7.4 DESIGN PROCEDURE

The design of storm drains can be accomplished by using the following steps and the storm drain computation sheet provided in figure 7-7. This procedure assumes that each storm drain will be initially designed to flow full under gravity conditions.

*Step 1* Prepare a working plan layout and profile of the storm drainage system establishing the following design information:

a. Location of storm drains.
b. Direction of flow.
c. Location of access holes and other structures.
d. Number or otherwise label all structures.
e. Location of all existing utilities (water, sewer, gas, underground cables, etc.).

*Step 2* Determine the following hydrologic parameters for the drainage areas tributary to each inlet to the storm drainage system:

a. Drainage areas.
b. Runoff coefficients.
c. Travel time.

*Step 3* Using the information generated in Steps 1 and 2, complete the following information on the design form for each run of pipe starting with the upstream most storm drain run:

a. "From" and "To" stations, Columns 1 and 2
b. "Length" of run, Column 3
c. "Inc." drainage area, Column 4

The incremental drainage area tributary to the inlet at the upstream end of the storm drain run under consideration.

d. "C", Column 6

The runoff coefficient for the drainage area tributary to the inlet at the upstream end of the storm drain under consideration. In some cases a composite runoff coefficient will need to be computed.

e. "Inlet" time of concentration, Column 9

The time required for water to travel from the hydraulically most distant point of the drainage area to the inlet at the upstream end of the storm drain under consideration.

f. "System" time of concentration Column 10

The time for water to travel from the most remote point in the storm drainage system to the upstream end of the storm drain under consideration. For the upstream most storm drain this value will be the same as the value in Column 9. For all other pipe runs this value is computed by adding the "System" time of concentration (Column 10) and the "Section" time of concentration (Column 17) from the previous run together to get the system time of concentration at the upstream end of the section under consideration (see section 7.2.2 for a general discussion of times of concentration).

*Step 4* Using the information from Step 3, compute the following:

a. "TOTAL" area, Column 5

Add the incremental area in Column 4 to the previous sections total area and place this value in Column 5.

## STORM DRAIN COMPUTATION SHEET

COMPUTED BY _____ DATE _____
CHECKED BY _____ DATE _____
PAGE _____ OF _____

ROUTE _____
SECTION _____
COUNTY _____

| STATION | | LENGTH | DRAINAGE AREA | | RUNOFF COEFF. "C" | "AREA" X "C" | | TIME OF CONCENTRATION | | RAIN "I" | RUNOFF "Q" | PIPE DIA. | CAPACITY FULL | VELOCITY | | SECTION TIME | INVERT ELEV. | | CROWN DROP | SLOPE |
|---|---|---|---|---|---|---|---|---|---|---|---|---|---|---|---|---|---|---|---|---|
| FROM | TO | (m) | INC (ha) | TOTAL (ha) | | INC. (ha) | TOTAL (ha) | INLET (min) | SYSTEM (min) | (mm/hr) | ($m^3/s$) | (m) | ($m^3/s$) | FULL (m/s) | DESIGN (m/s) | (min) | U/S (m) | D/S (m) | (m) | (m/m) |
| (1) | (2) | (3) | (4) | (5) | (6) | (7) | (8) | (9) | (10) | (11) | (12) | (13) | (14) | (15) | (16) | (17) | (18) | (19) | (20) | (21) |
| | | | | | | | | | | | | | | | | | | | | |



Figure 7-7. Storm drain computation sheet

b. "INC." "AREA" x "C", Column 7

Multiply the drainage area in Column 4 by the runoff coefficient in Column 6. Put the product, CA, in Column 7.

c. "TOTAL" "AREA" x "C", Column 8

Add the value in Column 7 to the value in Column 8 for the previous storm drain run and put this value in Column 8.

d. "I", Column 11

Using the larger of the two times of concentration in Columns 9 and 10, and an Intensity-Duration-Frequency (IDF) curve, determine the rainfall intensity, I, and place this value in Column 11.

e. "TOTAL Q", Column 12

Calculate the discharge as the product of Columns 8 and 11. Place this value in Column 12.

f. "PIPE DIA.", Column 13

Size the pipe using relationships and charts presented in section 7.1.3 to convey the discharge by varying the slope and pipe size as necessary. The storm drain should be sized as close as possible to a full gravity flow.

g. "SLOPE", Column 21

Place the pipe slope value determined in "f" in Column 21.

h. "CAPACITY FULL", Column 14

Place the full flow capacity of the pipe selected in Column 14.

i. "VELOCITIES", Columns 15 and 16

Compute the full flow and design flow velocities (if different) in the conduit and place these values in Columns 15 and 16. If the pipe is flowing full, the velocities can be determined from $V = Q/A$, equation 7-1, or chart 25. If the pipe is not flowing full, the velocity can be determined from chart 26.

j. "SECTION TIME", Column 17

Calculate the travel time in the pipe section by dividing the pipe length (Column 3) by the design flow velocity (Column 16). Place this value in Column 17.

k. " CROWN DROP", Column 20

Calculate an approximate crown drop at the structure to off-set potential structure energy losses using equation 7-9 introduced in section 7.1.6.6. Place this value in Column 20.

1. "INVERT ELEV.", Columns 18 and 19

   Compute the pipe inverts at the upper (U/S) and lower (D/S) ends of this section of pipe, including any pipe size changes that occurred along the section.

*Step 5* Repeat steps 3 and 4 for all pipe runs to the storm drain outlet. Use equations and nomographs to accomplish the design effort.

*Step 6* Check the design by calculating the hydraulic grade line as described in section 7.5.

## 7.5 HYDRAULIC GRADE LINE EVALUATION PROCEDURE

This section presents a step-by-step procedure for manual calculation of the hydraulic grade line (HGL) using the energy loss method. For most storm drainage systems, computer methods such as HYDRA [43] are the most efficient means of evaluating the HGL. However, it is important that the designer understand the analysis process so that he can better interpret the output from computer generated storm drain designs.

Figure 7-8 provides a sketch illustrating use of the hydraulic grade line in developing a storm drainage system. The following step-by-step procedure can be used to manually compute the HGL. The computation tables in figure 7-9 and figure 7-10 can be used to document the procedure outlined below.

Before outlining the computational steps in the HGL procedure, a comment relative to the organization of data on the HGL form is appropriate. A single line on the computation sheet is used for each junction or structure and its associated outlet pipe. For example, data for the first junction structure immediately upstream of the outflow pipe and the outflow pipe would be tabulated in the first full line of the computation sheet. Table A (figure 7-9) is used to calculate the HGL and EGL elevations while table B (figure 7-10) is used to calculate the pipe losses and structure losses. Values obtained in table B are transferred to table A for use during the design procedure. In the description of the computation procedures, a column number will be followed by a letter A or B to indicate the appropriate table to be used.

HGL computations begin at the outfall and are worked upstream taking each junction into consideration. Most storm drain systems are designed to function in a subcritical flow regime. In subcritical flow, pipe and access hole losses are summed to determine the upstream HGL levels. If supercritical flow occurs, pipe and manhole losses are not carried upstream. When a storm drain section is identified as being supercritical, the designer should advance to the next upstream pipe section to determine its flow regime. This process continues until the storm drain system returns to a subcritical flow regime.

The HGL computational procedure follows:

*Step 1* Identify the top of conduit (TOC) elevation, surface elevation, and structure ID at the outfall. Place these values in the first line in Columns 15A, 16A, and 1A respectively.

*Step 2* Identify the structure ID for the junction immediately upstream of the outflow pipe and enter this value in Column 1A and 1B of the second line.

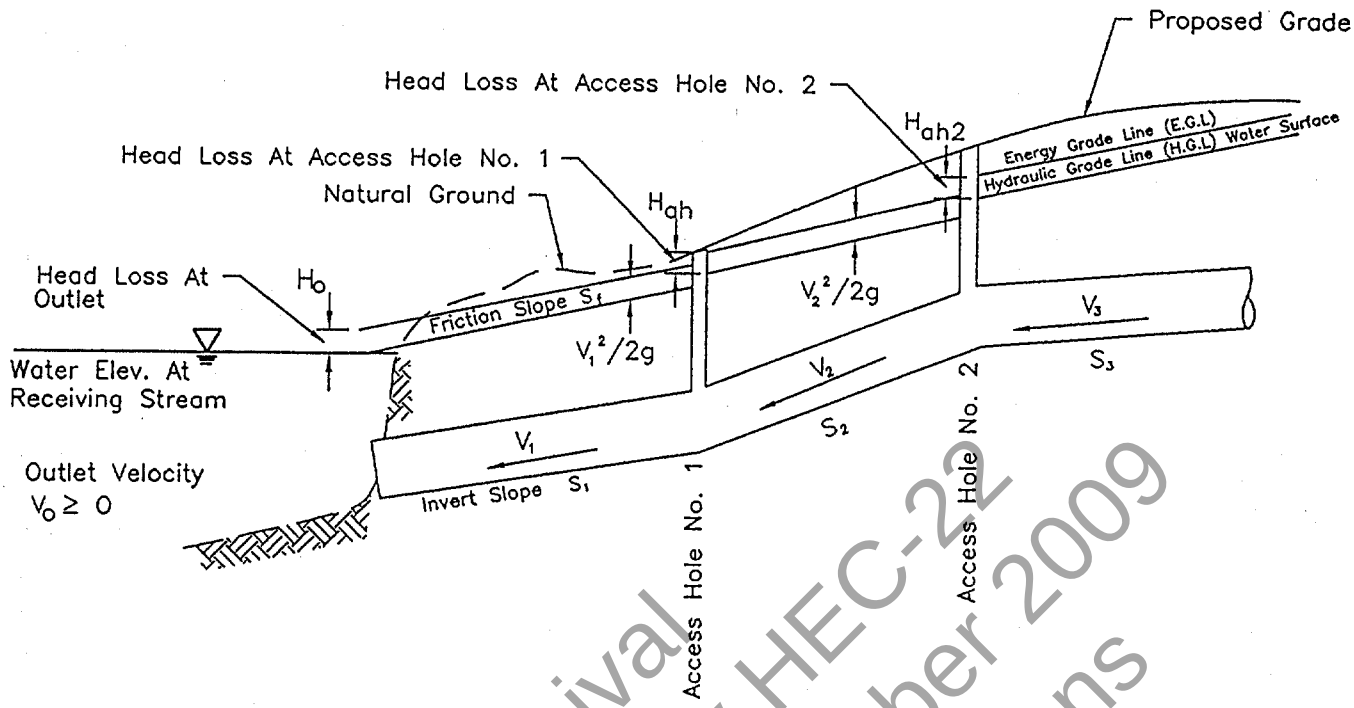


**Figure 7-8. Hydraulic grade line illustration.**



*Step 3* Identify the tailwater elevation at the downstream storm drain outlet. This is the Hydraulic Grade Line (HGL) at the outlet. If this is the system outlet, enter this value in the space provided at the top of table A. At interior structures this will be the value of HGL (column 14) at the downstream structure. If the outlet is submerged, the HGL will correspond to the water level at the outlet. If the outlet is not submerged, compute the HGL at the pipe outlet as follows:

Case 1: If the TW at the pipe outlet is greater than $(d_c + D)/2$, use the TW elevation as the hydraulic grade line (HGL).

Case 2: If the TW at the pipe outlet is less than $(d_c + D)/2$, use $(d_c + D)/2$ plus the invert elevation as the HGL.

Note: The value of $d_c$ for circular pipes can be determined from chart 27. Charts for conduits or other geometric shapes can be found in *Hydraulic Design of Highway Culverts*, HDS-5. [2]

*Step 4.* Enter the pipe diameter (D), discharge (Q), and conduit length (L) in columns 2A, 3A, and 4A respectively of the line associated with the upstream structure ID.

*Step 5.* If the pipe barrel flows full, enter the full flow velocity from column 15 of the storm drain computation sheet in column 5A and the velocity head ($V^2/2g$) in column 7A; continue with step 6. For part full flow, continue with step 5A.

## HYDRAULIC GRADE LINE COMPUTATION SHEET - TABLE A

COMPUTED BY _____ DATE _____ ROUTE _____
CHECKED BY _____ DATE _____ SECTION _____
PAGE _____ OF _____ COUNTY _____
INITIAL TAILWATER ELEV. _____

| Str. ID (1) | D (m) (2) | Q ($m^3/s$) (3) | L (m) (4) | V (m/s) (5) | d (m) (6a) | $d_c$ (m) (6b) | $V^2/2g$ (m) (7) | $S_f$ (m/m) (8) | Total Pipe Losses (table B) (m) (9) | $EGL_o$ (m) (10) | K (table B) (11) | $K(V^2/2g)$ (m) (12) | $EGL_i$ (m) (13) | HGL (m) (14) | U/S TOC (m) (15) | Surf. Elev. (m) (16) |
|---|---|---|---|---|---|---|---|---|---|---|---|---|---|---|---|---|
| | | | | | | | | | | | | | | | | |
| | | | | | | | | | | | | | | | | |
| | | | | | | | | | | | | | | | | |
| | | | | | | | | | | | | | | | | |
| | | | | | | | | | | | | | | | | |
| | | | | | | | | | | | | | | | | |
| | | | | | | | | | | | | | | | | |
| | | | | | | | | | | | | | | | | |
| | | | | | | | | | | | | | | | | |
| | | | | | | | | | | | | | | | | |
| | | | | | | | | | | | | | | | | |
| | | | | | | | | | | | | | | | | |
| | | | | | | | | | | | | | | | | |
| | | | | | | | | | | | | | | | | |
| | | | | | | | | | | | | | | | | |
| | | | | | | | | | | | | | | | | |
| | | | | | | | | | | | | | | | | |
| | | | | | | | | | | | | | | | | |
| | | | | | | | | | | | | | | | | |
| | | | | | | | | | | | | | | | | |



Figure 7-9. Hydraulic grade line computation form - table A.

## HYDRAULIC GRADE LINE COMPUTATION SHEET - TABLE B

COMPUTED BY _____ DATE _____ ROUTE _____
CHECKED BY _____ DATE _____ SECTION _____
PAGE _____ OF _____ COUNTY _____

| Str. ID | Pipe Losses (m) | | | | | | Structure Losses (m) | | | | | | | |
|---|---|---|---|---|---|---|---|---|---|---|---|---|---|---|
| | $H_f$ | $h_b$ | $H_c$ | $H_e$ | $H_j$ | Total | $d_{aho}$ | $K_o$ | $C_D$ | $C_d$ | $C_Q$ | $C_p$ | $C_B$ | K |
| (1) | (2) | (3) | (4) | (5) | (6) | (7) | (8) | (9) | (10) | (11) | (12) | (13) | (14) | (15) |
| | | | | | | | | | | | | | | |
| | | | | | | | | | | | | | | |
| | | | | | | | | | | | | | | |
| | | | | | | | | | | | | | | |
| | | | | | | | | | | | | | | |
| | | | | | | | | | | | | | | |
| | | | | | | | | | | | | | | |
| | | | | | | | | | | | | | | |
| | | | | | | | | | | | | | | |
| | | | | | | | | | | | | | | |
| | | | | | | | | | | | | | | |
| | | | | | | | | | | | | | | |
| | | | | | | | | | | | | | | |
| | | | | | | | | | | | | | | |
| | | | | | | | | | | | | | | |
| | | | | | | | | | | | | | | |



Figure 7-10. Hydraulic grade line computation form - table B.

*Step 5A.* Part full flow: Using the hydraulic elements graph in chart 26 with the ratio of full to part full flow (values from the storm drain computation sheet), compute the depth and velocity of flow in the conduit. Enter these values in column 6a and 5 respectively of Table A. Compute the velocity head ($V^2/2g$) and place in column 7A.

*Step 5B.* Compute critical depth for the conduit using chart 27. If the conduit is not circular, see HDS-5 [2] for additional charts. Enter this value in column 6b of Table A.

*Step 5C.* Compare the flow depth in column 6a with the critical depth in column 6b to determine the flow state in the conduit. If the flow depth in column 6a is greater than the critical depth in column 6b, the flow is subcritical, continue with Step 6. If the flow depth in column 6a is less than or equal to the critical depth in column 6b, the flow is supercritical, continue with Step 5D.

*Step 5D.* Pipe losses in a supercritical pipe section are not carried upstream. Therefore, enter a zero (0) in column 7B for this structure.

*Step 5E.* Enter the structure ID for the next upstream structure on the next line in columns 1A and 1B. Enter the pipe diameter (D), discharge (Q), and conduit length (L) in columns 2A, 3A, and 4A respectively of the same line.

*Step 5F.* If the pipe barrel flows full, enter the full flow velocity from column 15 of the storm drain computation sheet in column 5A and the velocity head ($V^2/2g$) in column 7A; continue with step 5H. For part full flow, continue with step 5G.

*Step 5G.* Part full flow: Using the hydraulic elements graph in chart 26 with the ratio of full to part full flow (values from the storm drain computation sheet) compute the depth and velocity of flow in the conduit. Enter these values in column 6a and 5 respectively of Table A. Compute the velocity head ($V^2/2g$) and place in Column 7A.

*Step 5H.* Compute critical depth for the conduit using chart 27. If the conduit is not circular see HDS-5 [2] for additional charts. Enter this value in column 6b of Table A.

*Step 5I.* Compare the flow depth in column 6a with the critical depth in column 6b to determine the flow state in the conduit. If the flow depth in column 6a is greater than the critical depth in column 6b, the flow is subcritical, continue with Step 5J. If the flow depth in column 6a is less than or equal to the critical depth in column 6b, the flow is supercritical, continue with Step 5K.

*Step 5J.* Subcritical flow upstream: Compute $EGL_o$ at the outlet of the previous structure as the outlet invert plus the sum of the outlet pipe flow depth and velocity head. Place this value in Column 10A of the appropriate structure line and continue with Step 9.

*Step 5K* Supercritical flow upstream: Manhole losses do not apply when the flow in two (2) successive pipes is supercritical. Place zeros (0) in Columns 11A, 12A, and 15B of the intermediate structure (previous line). The HGL at this structure is equal to the outlet invert plus the outlet pipe flow depth. This value should be placed in Column 14A of the previous structure line. Perform steps 20 and 21 and then repeat steps 5E through 5K until the flow regime returns to subcritical. If the next upstream structure is end-of-line, skip to step 10B then perform steps 20, 21, and 24.

*Step 6* Compute the friction slope ($S_f$) for the pipe using equation 7-3:

$$S_f = H_f / L = [Q\,n / (K_Q\,D^{2.67})]^2$$

Enter this value in Column 8A of the current line. Equation 7-3 assumes full flow in the outlet pipe. If full flow does not exist, set the friction slope equal to the pipe slope.

*Step 7* Compute the friction loss ($H_f$) by multiplying the length ($L_o$) in Column 4A by the friction slope ($S_f$) in Column 8A and enter this value in Column 2B. Compute other losses along the pipe run such as bend losses ($h_b$), transition contraction ($H_c$) and expansion ($H_e$) losses, and junction losses ($H_j$) using equations 7-5 through 7-8 and place the values in Columns 3B, 4B, 5B, and 6B, respectively. Add the values in 2B, 3B, 4B, 5B, and 6B and place the total in Column 7B and 9A.

*Step 8* Compute the energy grade line value at the upstream end of the outlet pipe ($EGL_o$) as the HGL elevation from the previous structure (Column 14A) plus the total pipe losses (Column 9A) plus the velocity head (Column 7A). Enter this value in Column 10A.

*Step 9* Estimate the depth of water in the access hole (estimated as the depth from the outlet pipe invert to the hydraulic grade line in the pipe at the outlet). Computed as $EGL_o$ (Column 10A) minus the pipe velocity head in Column 7A minus the pipe invert (from the storm drain computation form). Enter this value in Column 8B. If supercritical flow exists in this structure, leave this value blank and skip to step 5E.

*Step 10* If the inflow storm drain invert is submerged by the water level in the access hole, compute access hole losses using equations 7-10 and 7-11. Start by computing the initial structure head loss coefficient, $K_o$, based on relative access hole size. Enter this value in column 9B. If the inflow storm drain invert is not submerged by the water level in the access hole, compute the head in the manhole using techniques from HDS-5[2] as follows:

a. If the structure outflow pipe is flowing full or partially full under outlet control, compute the access hole loss by setting K in equation 7-10 to $K_e$ as reported in table 7-5b.

b. If the outflow pipe functions under inlet control, compute the depth in the access hole (HGL) using chart 28 or 29. If the storm conduit shape is other than circular, select the appropriate inlet control nomograph from HDS-5[2]. Add these values to the access hole invert to determine the HGL.

*Step 11* Using equation 7-13 compute the correction factor for pipe diameter, $C_D$, and enter this value in Column 10B. Note, this factor is only significant in cases where the $d_{aho}/D_o$ ratio is greater than 3.2.

*Step 12* Using equation 7-14 compute the correction factor for flow depth, $C_d$, and enter this value in Column 11B. Note, this factor is only significant in cases where the $d_{aho}/D_o$ ratio is less than 3.2.

*Step 13* Using equation 7-15, compute the correction factor for relative flow, $C_Q$, and enter this value in Column 12B. This factor = 1.0 if there are less than 3 pipes at the structure.

*Step 14* Using equation 7-16, compute the correction factor for plunging flow, $C_p$, and enter this value in Column 13B This factor = 1.0 if there is no plunging flow. This correction factor is only applied when $h > d_{aho}$.

*Step 15* Enter in Column 14B the correction factor for benching, $C_B$, as determined from table 7-6.

*Step 16* Using equation 7-11, compute the value of K and enter this value in Column 15B and 11A.

*Step 17* Compute the total access hole loss, $H_{ah}$, by multiplying the K value in Column 11A by the velocity head in Column 7A. Enter this value in Column 12A.

*Step 18* Compute $EGL_i$ at the structure by adding the structure losses in Column 12A to the $EGL_o$ value. Enter this value in Column 13A.

*Step 19* Compute the hydraulic grade line (HGL) at the structure by subtracting the velocity head in Column 7A from the $EGL_i$ value in Column 13A. Enter this value in Column 14A.

*Step 20* Compute the top of conduit (TOC) value for the inflow pipe (using information from the storm drain computation sheet) and enter this value in Column 15A.

*Step 21* Enter the ground surface or top of grate elevation at the structure in Column 16A. If the HGL value in Column 14A exceeds the surface elevation design modifications will be required.

*Step 22* Enter the structure ID for the next upstream structure in Column 1A and 1B of the next line. When starting a new branch line, skip to step 24.

*Step 23* Continue to determine the EGL through the system by repeating steps 3 through 22.

*Step 24* When starting a new branch line, enter the structure ID for the branch structure in Column 1A and 1B of a new line. Transfer the values from Columns 2A through 10A and 2B to 7B associated with this structure on the main branch run to the corresponding columns for the branch line. If flow in the main storm drain at the branch point is subcritical, continue with step 9; if supercritical, continue with step 5E.



## 7.6 STORM DRAIN DESIGN EXAMPLE

The following storm drain design example illustrates the application of the design procedures outlined in sections 7.4 and 7.5.

***Example 7-3***

**Given:** *The roadway plan and section illustrated in figure 7-11, duration intensity information in table 7-8, and inlet drainage area information in table 7-9. All grates are type P 50 x 100, all piping is reinforced concrete pipe (RCP) with a Manning's n value of 0.013, and the minimum design pipe diameter = 460 mm (18 in) for maintenance purposes.*

***Table 7-8. Intensity/Duration data for example 7-3.***

| Time (min) | 5 | 10 | 15 | 20 | 30 | 40 | 50 | 60 | 120 |
|---|---|---|---|---|---|---|---|---|---|
| Intensity (mm/hr) | 180 | 150 | 130 | 115 | 90 | 75 | 65 | 60 | 35 |
| Intensity (in/hr) | 7.1 | 5.9 | 5.1 | 4.5 | 3.5 | 3.0 | 2.6 | 2.4 | 1.4 |

***Find:***

*(1) Using the procedures outlined in section 7.4 determine appropriate pipe sizes and inverts for the system illustrated in figure 7-11.*

*(2) Evaluate the HGL for the system configuration determined in part (1) using the procedure outlined in section 7-5.*

**Solution:**

*(1) Storm Drain Design*

*Step 1. Figure 7-11 illustrates the proposed system layout including location of storm drains, access holes, and other structures. All structures have been numbered for reference. Figure 7-12 (a) and (b) illustrate the corresponding storm drain profiles. Figure 7-12 (a) represents the profile along both sides of the roadway. At the inlet structures in figure 7-12 (a), HGL elevations are shown for all conduits entering each structure for demonstration purposes only. During an actual design, only the largest HGL value should be noted in the design.*

*Step 2. Drainage areas, runoff coefficients, and times of concentration are tabulated in table 7-9. Example problems documenting the computation of these values are included in chapter 4.*

*Starting at the upstream end of a conduit run, Steps 3 and 4 from section 7.4 are completed for each storm drain pipe. A summary tabulation of the computational process is provided in figure 7-13. The column by column computations for each section of conduit follow:*

**Table 7-9. Drainage area information for design example 7-3.**

| Inlet No. | Drainage Area (ha) | "C" | Time of Concentration (min) |
|---|---|---|---|
| 40 | 0.26 | 0.73 | 3 |
| 41 | 0.14 | 0.73 | 2 |
| 42 | 0.26 | 0.73 | 3 |
| 43 | 0.14 | 0.73 | 2 |
| 44 | 0.66 | 0.25 | 6 |
| 45 | 0.13 | 0.73 | 2 |
| 46 | 0.13 | 0.73 | 2 |
| 47 | -- | -- | -- |
| 48 | | | |

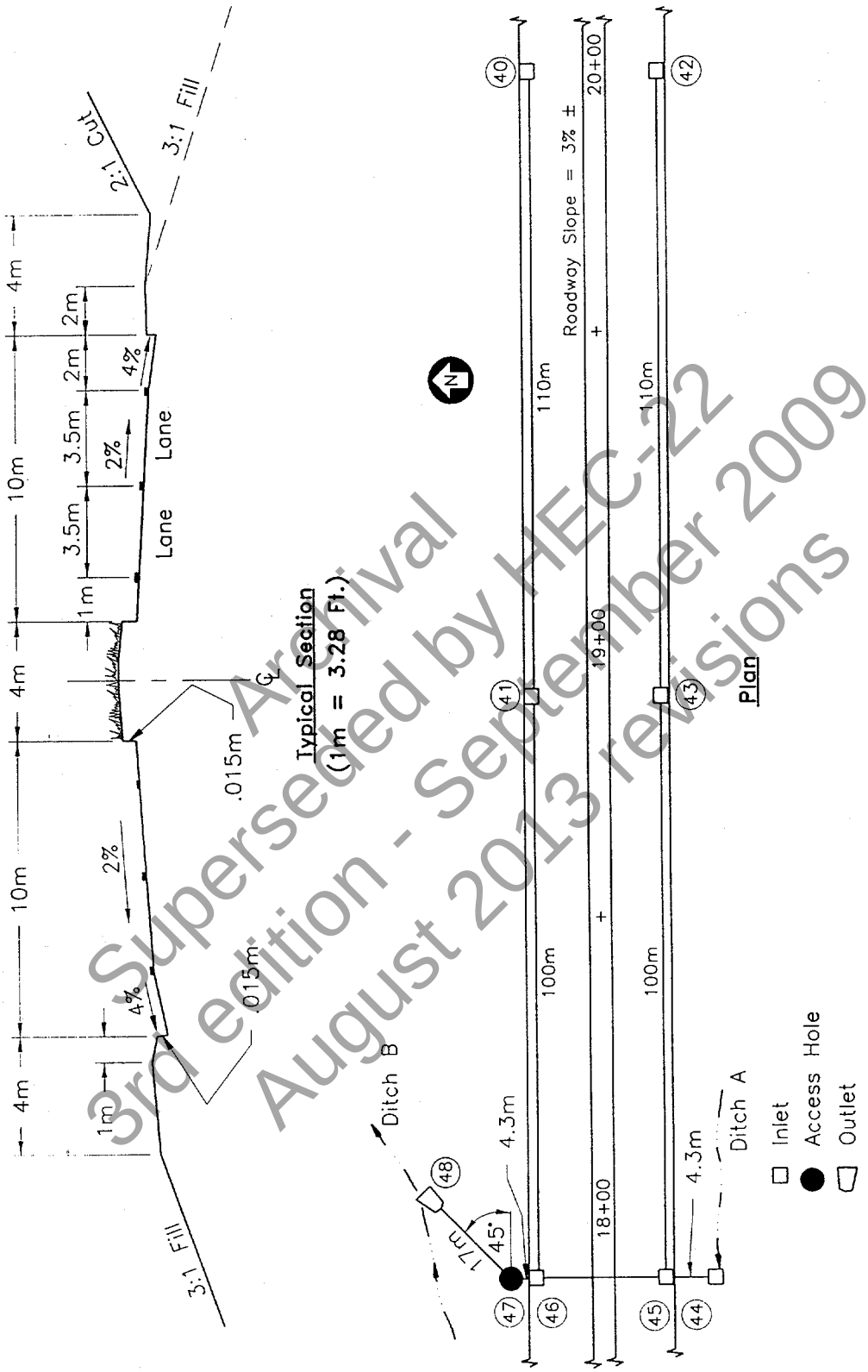




**Figure 7-11. Roadway plan and section for example 7-3.**

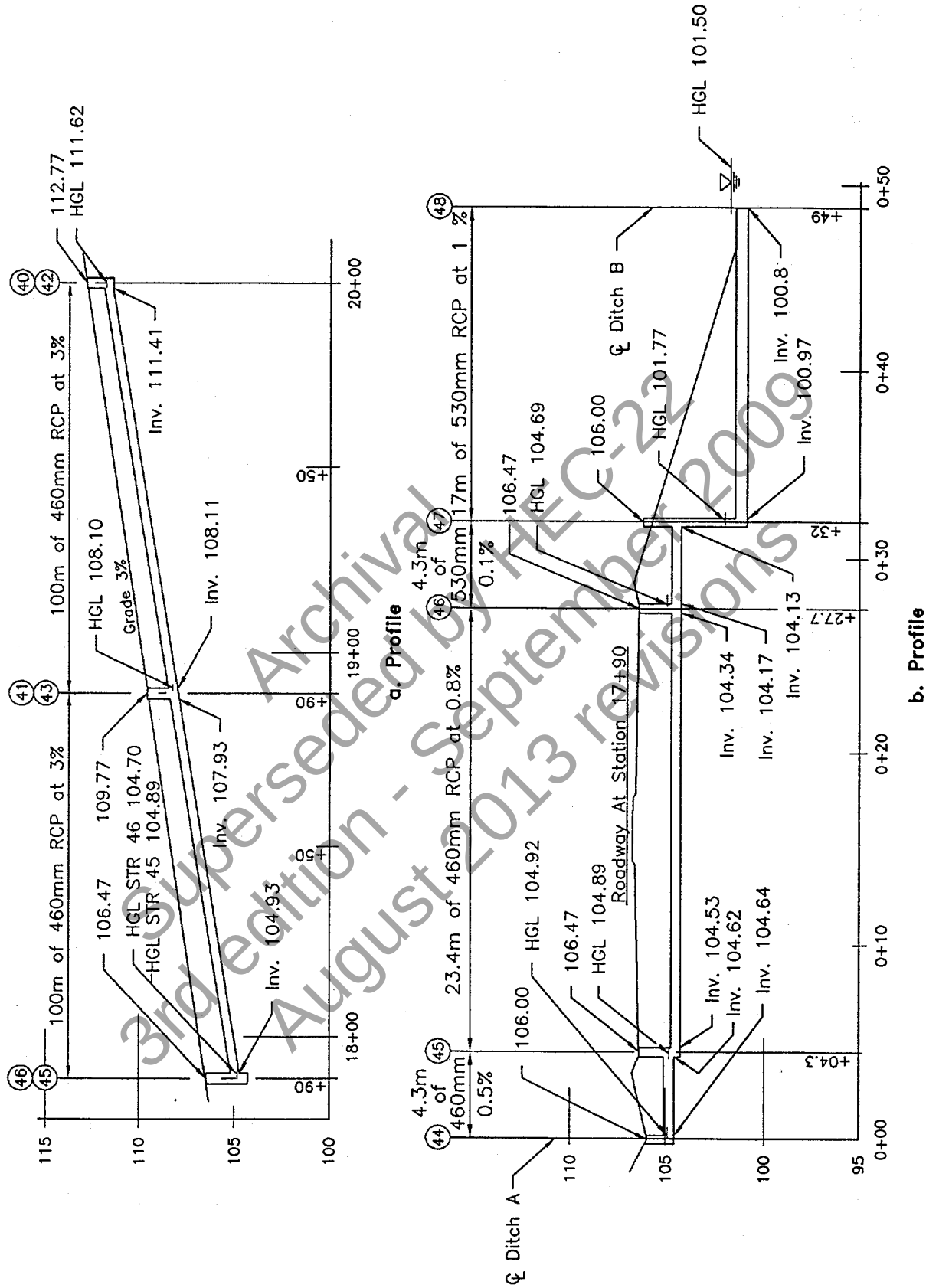




**Figure 7-12. Storm drain profiles for example 7-3.**

*Structure 40 to 41*

| | | | |
|---|---|---|---|
| Col. 1 | From | = 40 | |
| Col. 2 | To | = 41 | |
| Col. 3 | Run Length | $L$ = 2000 m - 1890 m<br>$L$ = 110 m (361 ft) | figure 7-12 |
| Col. 4 | Inlet Area | $A_i$ = 0.26 ha (0.64 ac) | table 7-9 |
| Col. 5 | Total Area | $A_t$ = 0.26 ha (0.64 ac) | total area up to inlet 40 |
| Col. 6 | "C" | $C$ = 0.73 | table 7-9 |
| Col. 7 | Inlet CA | $CA$ = (0.26)(0.73)<br>$CA$ = 0.19 ha (0.47 ac) | Col. 4 times Col. 6 |
| Col. 8 | Sum CA | $\Sigma CA$ = 0.19 + 0<br>$\Sigma CA$ = 0.19 ha (0.47 ac) | Col. 7 plus previous<br>Col. 8 |
| Col. 9 | Inlet Time | $t_i$ = 3 min | table 7-9 |
| Col. 10 | Sys. Time | $t_c$ = 3 min (use 5 min) | same as Col. 9 for upstream most section |
| Col. 11 | Intensity | $I$ = 180 mm/hr (7.1 in/hr) | table 7-8 or figure 3-1; System time less than 5 minutes therefor, use 5 minutes |
| Col. 12 | Runoff | $Q = (CA)\ (I)\ /K_c$<br>$Q$ = (0.19) (180) / 360<br>$Q$ = 0.10 $m^3$/sec (3.3 $ft^3$/sec) | equation 3-1<br>Col. 8 times Col. 11 divided by 360. |
| Col. 21 | Slope | $S$ = 0.03 | select desired pipe slope |
| Col. 13 | Pipe Dia. | $D = [(Qn)/(K_Q\ S_o^{0.5})]^{0.375}$<br>$D = [0.10)(0.013)/(0.312)(0.03)^{0.5}]^{0.375}$<br>$D$ = 0.25 m (0.8 ft)<br>$D_{min}$ = 0.46 m (1.5 ft) | equation 7-1 or chart 25<br><br><br>use $D_{min}$ |
| Col. 14 | Full Cap. | $Q_f = (K_Q/n)\ D^{2.67}\ S_o^{0.5}$<br>$Q_f = (0.312/0.013)\ (0.46)^{2.67}\ (0.03)^{0.5}$<br>$Q_f$ = 0.52 $m^3$/5 (18.3)$ft^3$/s | equation 7-1 or chart 25 |
| Col. 15 | Vel. Full | $V_f = (K_V/n)\ D^{0.67}\ S_o^{0.5}$<br>$V_f = (0.397/0.013)\ (0.46)^{0.67}\ (0.03)^{0.5}$<br>$V_f$ = 3.14 m/s (10.3 ft/s) | equation 7-1 or chart 25 |
| Col. 16 | Vel. Design | $Q/Q_f$ = 0.10/0.52 = 0.19<br>$V/V_f$ = 0.74<br>$V$ = (0.74) (3.14)<br>$V$ = 2.32 m/s (7.62 ft/s) | <br>chart 26 |

## STORM DRAIN COMPUTATION SHEET

COMPUTED BY _____ DATE _____ ROUTE _____
CHECKED BY _____ DATE _____ SECTION _____
PAGE _____ OF _____ COUNTY _____

| STATION | | LENGTH | DRAINAGE AREA | | RUNOFF COEFF. "C" | "AREA" X "C" | | TIME OF CONCENTRATION | | RAIN "I" | RUNOFF "Q" | PIPE DIA. | CAPACITY FULL | VELOCITY | | SECTION TIME | INVERT ELEV. | | CROWN DROP | SLOPE |
|---|---|---|---|---|---|---|---|---|---|---|---|---|---|---|---|---|---|---|---|---|
| FROM | TO | (m) | INC (ha) | TOTAL (ha) | | INC. (ha) | TOTAL (ha) | INLET (min) | SYSTEM (min) | (mm/hr) | ($m^3/s$) | (m) | ($m^3/s$) | FULL (m/s) | DESIGN (m/s) | (min) | U/S (m) | D/S (m) | (m) | (m/m) |
| (1) | (2) | (3) | (4) | (5) | (6) | (7) | (8) | (9) | (10) | (11) | (12) | (13) | (14) | (15) | (16) | (17) | (18) | (19) | (20) | (21) |
| 40 | 41 | 110.0 | 0.26 | 0.26 | 0.73 | 0.19 | 0.19 | 3 | 5 | 180 | 0.10 | 0.46 | 0.52 | 3.14 | 2.32 | 1 | 111.41 | 108.11 | ---- | 0.03 |
| 41 | 46 | 100.0 | 0.14 | 0.40 | 0.73 | 0.10 | 0.29 | 2 | 5 | 180 | 0.15 | 0.46 | 0.52 | 3.14 | 2.64 | 1 | 107.93 | 104.93 | 0.18 | 0.03 |
| 42 | 43 | 110.0 | 0.26 | 0.26 | 0.73 | 0.19 | 0.19 | 3 | 5 | 180 | 0.10 | 0.46 | 0.52 | 3.14 | 2.32 | 1 | 111.41 | 108.11 | ---- | 0.03 |
| 43 | 45 | 100.0 | 0.14 | 0.40 | 0.73 | 0.10 | 0.29 | 2 | 5 | 180 | 0.15 | 0.46 | 0.52 | 3.14 | 2.64 | 1 | 107.93 | 104.93 | 0.18 | 0.03 |
| 44 | 45 | 4.3 | 0.66 | 0.66 | 0.25 | 0.17 | 0.17 | 6 | 6 | 172 | 0.08 | 0.46 | 0.21 | 1.28 | 1.18 | 0 | 104.64 | 104.62 | ---- | 0.005 |
| 45 | 46 | 23.4 | 0.13 | 1.19 | 0.73 | 0.09 | 0.55 | 2 | 6 | 172 | 0.26 | 0.46 | 0.27 | 1.62 | 1.88 | 0 | 104.53 | 104.34 | 0.19 | 0.008 |
| 46 | 47 | 4.3 | 0.13 | 1.72 | 0.73 | 0.09 | 0.93 | 2 | 6 | 172 | 0.44 | 0.53 | 0.44 | 2.00 | 2.00 | 0 | 104.17 | 104.13 | 0.10 | 0.01 |
| 47 | 48 | 17.0 | 0.00 | 1.72 | - | - | 0.93 | - | 6 | 172 | 0.44 | 0.53 | 0.44 | 2.00 | 2.00 | 0 | 100.97 | 100.80 | 3.16 | 0.01 |



**Figure 7-13. Storm drain computation sheet for example 7-3.**

| | | | |
|---|---|---|---|
| Col. 17 | Sect. Time | $t_s$ = 110 / 2.32 / 60<br>$t_s$ = 0.8 min; use 1 min | Col. 3 divided by Col. 16 |
| Col. 20 | Crown Drop | = 0 | Upstream most invert |
| Col. 18 | U/S Invert | = Grnd - 0.90 m - dia<br>= 112.77 - 0.90 - 0.46<br>= 111.41 m (365.5 ft) | 0.90 m (3 ft) = min cover<br>Ground elevation from figure 7-12 |
| Col. 19 | D/S Invert | = (111.41) - (110)(0.03)<br>= 108.11 m (354.7 ft) | Col. 18 - (Col. 3)(Col. 21) |

*At this point, the pipe should be checked to determine if it still has adequate cover.*

<u>Structure 41 to 46</u>

| | | | |
|---|---|---|---|
| Col. 1 | From | = 41 | |
| Col. 2 | To | = 46 | |
| Col. 3 | Run Length | L = 1890 - 1790<br>L = 100 m (328 ft) | figure 7-12 |
| Col. 4 | Inlet Area | $A_i$ = 0.14 ha (0.35 ac) | table 7-9 or example 4-15 |
| Col. 5 | Total Area | $A_t$ = 0.14 + 0.26<br>$A_t$ = 0.40 ha (0.99 ac) | |
| Col. 6 | "C" | C = 0.73 | table 7-9 |
| Col. 7 | Inlet CA | CA = (0.14)(0.73)<br>CA = 0.10 ha (0.25 ac) | Col. 4 times Col. 6 |
| Col. 8 | Sum CA | ΣCA = 0.10 + 0.19<br>ΣCA = 0.29 ha (0.72 ac) | Col. 7 plus previous Col. 8 |
| Col. 9 | Inlet Time | $t_i$ = 2 min | table 7-9 (example 4-15) |
| Col. 10 | Sys. Time | $t_c$ = 4 min (use 5 min) | The larger of Col. 9 or Col. 10 + Col. 17 from previous run |
| Col. 11 | Intensity | I = 180 mm/hr (7.1 in/hr) | table 7-8; system time equals 5 min |
| Col. 12 | Runoff | $Q = (CA)(I)/(K_Q)$<br>Q = (0.29) (180) / 360<br>Q = 0.15 $m^3$/sec (5.3 $ft^3$/sec) | Col. 8 times Col. 11 divided by 360. |
| Col. 21 | Slope | S = 0.03 | Select desired pipe slope |
| Col. 13 | Pipe Dia. | $D = [(Q_n)/(K_Q\ S_o^{0.5})]^{0.375}$<br>$D = [(0.15)\ (0.013)/(0.312)(0.03)^{0.5}]^{0.375}$ | equation 7-1 of chart 25 |

| | | | |
|---|---|---|---|
| | | $D = 0.29$ m (1.0 ft) | |
| | | $D_{min} = 0.46$m (1.5 ft) | use $D_{min}$ |
| Col. 14 | Full Cap. | $Q_f = (K_Q/n)\ D^{2.67}\ S_o^{0.5}$ | equation 7-1 or chart 25 |
| | | $Q_f = (0.312/0.013)(0.46)^{2.67}(0.03)^{0.5}$ | |
| | | $Q_f = 0.52\ m^3/s\ (18.3\ ft^3/s)$ | |
| Col. 15 | Vel. Full | $V_f = (K_v/n)\ D^{0.67}\ S_o^{0.5}$ | equation 7-1 or chart 25 |
| | | $V_f = (0.397/0.013)(0.46)^{0.67}\ (0.03)^{0.5}$ | |
| | | $V_f = 3.14$ m/s (10.2 ft/s) | |
| Col. 16 | Vel. Design | $Q/Q_f = 0.150/0.52 = 0.29$ | |
| | | $V/V_f = 0.84$ | chart 26 |
| | | $V = (0.84)\ (3.14)$ | |
| | | $V = 2.64$ m/s (8.7 ft/s) | |
| Col. 17 | Sect. Time | $T_s = 100 / 2.64 / 60$ | Col. 3 divided by Col. 16 |
| | | $T_s = 0.6$ min; use 1 min | |
| Col. 20 | Crown Drop | $= K\ V^2 / (2g)$ | equation 7-9 with table 7-5 |
| | | $= (0.5)(2.64)^2 / [(2)(9.81)]$ | |
| | | $= 0.18$ m (0.6 ft) | |
| Col. 18 | U/S Invert | $= 108.11 - 0.18$ | Downstream invert of upstream conduit |
| | | $= 107.93$ (354.0 ft) | minus estimated structure loss (drop) |
| Col. 19 | D/S Invert | $= (107.93) - (100)(0.03)$ | Col. 18 - (Col. 3)(Col. 21) |
| | | $= 104.93$ (344.2 ft) | |

<u>Structure 42 to 43</u>

Same as Structure 40 to 41

<u>Structure 43 to 45</u>

Same as Structure 41 to 46

<u>Structure 44 to 45</u>

| | | | |
|---|---|---|---|
| Col. 1 | From | $= 44$ | |
| Col. 2 | To | $= 45$ | |
| Col. 3 | Run Length | $L = 4.3 - 0.00$ | figure 7-12 |
| | | $L = 4.3$ m (14.1 ft) | |
| Col. 4 | Inlet Area | $A_i = 0.66$ ha (1.63 ac) | table 7-9 |
| Col. 5 | Total Area | $A_t = 0.66$ (1.63 ac) | Upstream most structure |
| Col. 6 | "C" | $C = 0.25$ | table 7-9 |

| | | | |
|---|---|---|---|
| Col. 7 | Inlet CA | $CA = (0.66)(0.25)$<br>$CA = 0.17$ ha (0.42 ac) | Col. 4 times Col. 6 |
| Col. 8 | Sum CA | $\Sigma CA = 0.17 + 0$<br>$\Sigma CA = 0.17$ | Upstream most section |
| Col. 9 | Inlet Time | $t_i = 6$ min | table 7-9 |
| Col. 10 | Sys. Time | $t_c = 6$ min | Same as Col. 9; upstream most section |
| Col. 11 | Rain "I" | $I = 172$ mm/hr (6.8 in/hr) | table 7-8; interpolated for 6 min system time |
| Col. 12 | Runoff | $Q = (CA)\ I/K_c$<br>$Q = (0.17)\ (172)\ /\ 360$<br>$Q = 0.08\ m^3/sec\ (2.8\ ft^3/sec)$ | Col. 8 times Col. 11 divided by 360. |
| Col. 21 | Slope | $S = 0.005$ | Select desired pipe slope |
| Col. 13 | Pipe Dia. | $D = [(Q_n)/(K_Q\ S_o^{0.5})]^{0.375}$<br>$D = [(0.08)(0.013)/(0.312)(0.005)^{0.5}]^{0.375}$<br>$D = 0.32$ m (1.1 ft)<br>$D_{min} = 0.46$ m (1.5 ft)<br>use $D = 0.46$ m (1.5 ft) | equation 7-1 or chart 25<br><br><br>minimum allowable pipe dia. |
| Col. 14 | Full Cap. | $Q_f = (K_Q/n)\ D^{2.67}\ S_o^{0.5}$<br>$Q_f = (0.312/0.013)(0.46)^{2.67}\ S_o^{0.5}$<br>$Q_f = 0.21\ m^3/s\ (7.4\ ft^3/s)$ | equation 7-1 or chart 25 |
| Col. 15 | Vel. Full | $V_f = (K_v/n)\ D^{0.67}\ S_o^{0.5}$<br>$V_f = (0.397/0.013)(0.46)^{0.67}\ (0.005)^{0.5}$<br>$V_f = 1.28$ m/s | equation 7-1 or chart 25 |
| Col. 16 | Vel. Design | $Q/Q_f = 0.08/0.21 = 0.38$<br>$V/V_f = 0.92$<br>$V = (0.92)\ (1.32)$<br>$V = 1.18$ m/s | <br>chart 26 |
| Col. 17 | Sect. Time | $t_s = 4.3\ /\ 1.2\ /\ 60$<br>$t_s = 0.1$ min<br>use 0 min | Col. 3 divided by Col. 16 |
| Col. 20 | Crown Drop | none | Upstream most structure |
| Col. 18 | U/S Invert | = Grnd - 0.90 m - dia<br>= 106.0 - 0.90 - 0.46<br>= 104.64 m (343.2 ft) | 0.90 m (3 ft) = min cover<br>Ground elevation from figure 7-12 |
| Col. 19 | D/S Invert | = (104.64) - (4.3)(0.005)<br>= 104.62 m (343.2 ft) | Col. 18 - (Col. 3)(Col. 21) |

Structure 45 to 46

| | | | |
|---|---|---|---|
| Col. 1 | From | = 45 | |
| Col. 2 | To | = 46 | |
| Col. 3 | Run Length | $L = 27.7 - 4.3$<br>$L = 23.4$ m (76.8 ft) | figure 7-12 |
| Col. 4 | Inlet Area | $A_i = 0.13$ ha (0.32 ac) | table 7-9 |
| Col. 5 | Total Area | $A_t = 0.13 + 0.40 + 0.66$<br>$A_t = 1.19$ ha (2.94 ac) | Col. 4 plus structure 43 and 44 total areas |
| Col. 6 | "C" | $C = 0.73$ | table 7-9 |
| Col. 7 | Inlet CA | $CA = (0.13)(0.73)$<br>$CA = 0.09$ ha (0.22 ac) | Col. 4 times Col. 6 |
| Col. 8 | Sum CA | $\Sigma CA = 0.09 + 0.29 + 0.17$<br>$\Sigma CA = 0.55$ ha (1.36 ac) | Col. 7 plus structure 43 and 44 total CA values |
| Col. 9 | Inlet Time | $t_i = 2$ min | table 7-9 |
| Col. 10 | Sys. Time | $t_c = 6$ min | The larger of Col. 9 or Col. 10 + Col. 17 from previous tributary run |
| Col. 11 | Intensity | $I = 172$ mm/hr (6.8 in/hr) | Interpolated from table 7-8 |
| Col. 12 | Runoff | $Q = (CA)\ I/K_c$<br>$Q = (0.55)\ (172)\ /\ 360$<br>$Q = 0.26\ m^3/sec\ (9.2\ ft^3/sec)$ | Col. 8 times Col. 11 divided by 360. |
| Col. 21 | Slope | $S = 0.008$ | Select desired pipe slope |
| Col. 13 | Pipe Dia. | $D = [(Q_n)/K_Q\ S_o^{0.5})]^{0.375}$<br>$D = [0.26)(0.013)/(0.312)(0.008)^{0.5}]^{0.375}$<br>$D = 0.45$ m (1.4 ft)<br>$D_{min} = 0.46$ m (1.5 ft) | equation 7-1 or chart 25<br><br><br>minimum allowable per dia. |
| Col. 14 | Full Cap. | $Q_f = (K_Q/n)\ D^{2.67}\ S_o^{0.5}$<br>$Q_f = (0.312/0.013)\ (0.46)^{2.67}\ (0.008)^{0.5}$<br>$Q_f = (0.27\ m^3/s)\ (9.5\ ft^3/s)$ | equation 7-1 or chart 25 |
| Col. 15 | Vel. Full | $V_f = (K_v/n)\ D^{0.67}\ S_o^{0.5}$<br>$V_f = (0.397/0.013)\ (0.46)^{0.67}\ (0.008)^{0.5}$<br>$V_f = 1.62$ m/s (5.3 ft/s) | |
| Col. 16 | Vel. Design | $Q/Q_f = 0.26/0.27 = 0.96$<br>$V/V_f = 1.16$<br>$V = (1.16)\ (1.62)$ | <br>chart 26 |

| | | | |
|---|---|---|---|
| | | $V = 1.88$ m/s (6.2 ft/s) | |
| Col. 17 | Sect. Time | $t_s = 23.4 / 1.88 / 60$<br>$t_s = 0.2$ min | Col. 3 divided by Col. 16<br>use $t_s = 0$ |
| Col. 20 | Crown Drop | $= K V^2 / (2g)$<br>$= (0.5)(1.88)^2 / [(2)(9.81)]$<br>$= 0.09$ m (0.3 ft) | equation 7-9 and table 7-5: Inlet straight run |
| Col. 18 | U/S Invert | $= 104.62 - 0.09$<br>$= 104.53$ (354.1 ft) | Downstream invert of upstream conduit minus estimated structure loss (drop) |
| Col. 19 | D/S Invert | $= 104.53 - (23.4)(0.008)$<br>$= 104.34$ (342.2 ft) | Col. 18 - (Col. 3)(Col. 21) |

Structure 46 to 47

| | | | |
|---|---|---|---|
| Col. 1 | From | $= 46$ | |
| Col. 2 | To | $= 47$ | |
| Col. 3 | Run Length | $L = 32.0 - 27.7$<br>$L = 4.3$ m (14.1 ft) | figure 7-12 |
| Col. 4 | Inlet Area | $A_i = 0.13$ ha (0.32 ac) | table 7-9 |
| Col. 5 | Total Area | $A_t = 0.13 + 1.19 + 0.40$<br>$A_t = 1.72$ ha (4.25 ac) | Col. 4 plus structure 41 and 45 total areas |
| Col. 6 | "C" | $C = 0.73$ | table 7-9 |
| Col. 7 | Inlet CA | $CA = (0.13)(0.73)$<br>$CA = 0.09$ ha (0.22 ac) | Col. 4 times Col. 6 |
| Col. 8 | Sum CA | $\Sigma CA = 0.09 + 0.55 + 0.29$<br>$\Sigma CA = 0.93$ ha (2.30 ac) | Col. 7 plus structure 41 and 45 total CA values |
| Col. 9 | Inlet Time | $t_i = 2$ min | table 7-9 |
| Col. 10 | Sys. Time | $t_c = 6$ min | The larger of Col. 9 or Col. 10 + Col. 17 from previous tributary run |
| Col. 11 | Intensity | $I = 172$ mm/hr (6.8 in/hr) | Interpolated from table 7-8 |
| Col. 12 | Runoff | $Q = (CA)(I)/360$<br>$Q = (0.93)(172) / 360$<br>$Q = 0.44$ m$^3$/sec (15.5 ft$^3$/sec) | Col. 8 times Col. 11 divided by 360. |
| Col. 21 | Slope | $S = 0.01$ | Select desired pipe slope |
| Col. 13 | Pipe Dia. | $D = [(Q_n)/(K_Q S_o^{0.5})]\ 0.375$ | equation 7-1 or chart 25 |

$D = [(0.44)(0.013)/(0.312)(0.01)^{0.5}]^{0.375}$
$D = 0.53\ m\ (1.75\ ft)$

| | | | |
|---|---|---|---|
| Col. 14 | Full Cap. | $Q_f = (K_Q/n)(D^{2.67})(S_o^{0.5})$<br>$Q_f = (0.312)/(0.013)(0.53)^{2.67}\ (0.01)^{0.5}$<br>$Q_f = 0.44\ m^3/s\ (15.5\ ft^3/s)$ | equation 7-1 or chart 25 |
| Col. 15 | Vel. Full | $V_f = (K_v/n)\ D^{0.67}\ S_o^{0.5}$<br>$V_f = (0.397)/(0.013)(0.53)^{0.67}(0.01)^{0.5}$<br>$V_f = 2.00\ m/s\ (6.6\ ft/s)$ | equation 7-1 or chart 25 |
| Col. 16 | Vel. Design | $Q/Q_f = 0.44/0.44 = 1.00$<br>$V/V_f = 1.00$<br>$V = (1.0)\ (2.00)$<br>$V = 2.00\ m/s\ (6.6\ ft/s)$ | chart 26 |
| Col. 17 | Sect. Time | $t_s = 4.3 / 2.00 / 60$<br>$t_s = 0.0\ min$ | Col. 3 divided by Col. 16 |
| Col. 20 | Crown Drop | $= K\ V^2 / (2g)$<br>$= (0.5)(2.00)^2 / [(2)(9.81)]$<br>$= 0.10\ m\ (0.33\ ft)$ | equation 7-9 and table 7-5;<br>inlet straight run |
| Col. 18 | U/S Invert | $= 104.34 - 0.10 - 0.07$<br>$= 104.17\ m\ (341.68\ ft)$ | Downstream invert of upstream conduit minus estimated structure loss (drop) |
| Col. 19 | D/S Invert | $= 104.17 - (4.3)(0.01)$<br>$= 104.13\ m\ (341.55\ ft)$ | Col. 18 - (Col. 3)(Col. 21) |

Structure 47 to 48

| | | | |
|---|---|---|---|
| Col. 1 | From | = 47 | |
| Col. 2 | To | = 48 | |
| Col. 3 | Run Length | $L = 49.0 - 32.0$<br>$L = 17.0\ m\ (55.8\ ft)$ | figure 7-12 |
| Col. 4 | Inlet Area | $A_i = 0.0\ ha\ (0.0\ ac)$ | table 7-9 |
| Col. 5 | Total Area | $A_t = 1.72\ ha\ (4.25\ ac)$ | Col. 4 plus structure 46 total area |
| Col. 6 | "C" | $C = n/a$ | table 7-9 |
| Col. 7 | Inlet CA | $CA = 0.0$ | Col. 4 times Col. 6 |
| Col. 8 | Sum CA | $\Sigma CA = 0.00 + 0.93$<br>$\Sigma CA = 0.93\ ha\ (2.30\ ac)$ | Col. 7 plus structure 46 total CA value |
| Col. 9 | Inlet Time | n/a | No inlet |

| | | | |
|---|---|---|---|
| Col. 10 | Sys. Time | $t_c$ = 6 min | The larger of Col. 9 or Col. 10 + Col. 17 from previous tributary run |
| Col. 11 | Intensity | I = 172 mm/hr (6.8 in/hr) | Interpolated from table 7-8 |
| Col. 12 | Runoff | Q = (CA) I/360<br>Q = (0.93) (172) / 360<br>Q = 0.44 $m^3$/sec (15.5 $ft^3$/sec) | Col. 8 times Col. 11 divided by 360. |
| Col. 21 | Slope | S = 0.01 | Select desired pipe slope |
| Col. 13 | Pipe Dia. | $D = [(Q_n)/(K_Q\ S_o^{0.5})]^{0.375}$<br>$D = [(0.44)(0.013)/(0.312)(0.01)^{0.5}]^{0.375}$<br>D = 0.53 m (1.75 ft) | equation 7-1 or chart 25 |
| Col. 14 | Full Cap. | $Q_f = (K_Q/n)(D^{2.67})(S_o^{0.5})$<br>$Q_f = (0.312)/(0.013)(0.53)^{2.67}\ (0.01)^{0.5}$<br>$Q_f$ = 0.44 $m^3$/s (15.5 $ft^3$/s) | equation 7-1 or chart 25 |
| Col. 15 | Vel. Full | $V_f = (K_v/n)\ D^{0.67}\ S_o^{0.5}$<br>$V_f = (0.397)/(0.013)(0.53)^{0.67}(0.01)^{0.5}$<br>$V_f$ = 2.00 m/s (6.6 ft/s) | equation 7-1 or chart 25 |
| Col. 16 | Vel. Design | $Q/Q_f$ = 0.44/0.44 = 1.00<br>$V/V_f$ = 1.00<br>V = (1.00) (2.00)<br>V = 2.00 m/s (6.6 ft/s) | chart 26<br><br>The need for an energy dissipator should be evaluated. |
| Col. 17 | Sect. Time | $t_s$ = 4.3 / 2.00 / 60<br>$t_s$ = 0.0 min | Col. 3 divided by Col. 16 |
| Col. 19 | D/S Invert | = 100.8 m (330.6 ft) | Invert at discharge point in ditch |
| Col. 18 | U/S Invert | = 100.8 + (17)(0.01)<br>= 100.97 (331.2 ft) | Col. 19 + (Col. 3)(Col. 21) |
| Col. 20 | Crown Drop | = 104.13 - 100.97<br>= 3.16 m (10.4 ft) | Col. 19 previous run - Col. 18 straight run |

(2) *Hydraulic Grade Line Computations*

*The following computational procedure follows the steps outlined in section 7.5 above. Starting at structure 48, computations proceed in the upstream direction. A summary tabulation of the computational process is provided in figure 7-14 and figure 7-15. The column by column computations for each section of storm drain follow:*

## HYDRAULIC GRADE LINE COMPUTATION SHEET - TABLE A

COMPUTED BY _____ DATE _____
CHECKED BY _____ DATE _____
PAGE _____ OF _____
INITIAL TAILWATER ELEV. 101.50 m

ROUTE _____
SECTION _____
COUNTY _____

| Str. ID (1) | D (m) (2) | Q ($m^3/s$) (3) | L (m) (4) | V (m/s) (5) | d (m) (6a) | $d_c$ (m) (6b) | $V^2/2g$ (m) (7) | $S_f$ (m/m) (8) | Total Pipe Losses (table B) (m) (9) | $EGL_o$ (m) (10) | K (table B) (11) | $K(V^2/2g)$ (m) (12) | $EGL_i$ (m) (13) | HGL (m) (14) | U/S TOC (m) (15) | Surf. Elev. (m) (16) |
|---|---|---|---|---|---|---|---|---|---|---|---|---|---|---|---|---|
| 48 | | | | | | | | | | | | | | | 101.33 | outfall |
| 47 | 0.53 | 0.44 | 17.0 | 1.99 | ----- | ----- | 0.20 | 0.010 | 0.17 | 101.87 | 0.5 | 0.10 | 101.97 | 101.77 | 104.66 | 106.00 |
| ALTERNATE HGL @ STR. 47 | | | | | | | | | | | | | | 104.62 | | |
| 46 | 0.53 | 0.44 | 4.3 | 2.0 | | 0.44 | 0.20 | 0.010 | 0.04 | 104.86 | 0.16 | 0.03 | 104.89 | 104.69 | 104.80 | 106.47 |
| ALTERNATE HGL @ STR. 46 | | | | | | | | | | | | | | 104.75 | | |
| 45 | 0.46 | 0.26 | 23.4 | 1.88 | 0.36 | 0.36 | 0.18 | 0.0 | 0.0 | | 0.0 | 0.0 | ----- | 104.89 | 105.08 | 106.47 |
| | | | | | | | | | | | | | | | | |
| 44 | 0.46 | 0.08 | 4.3 | 1.18 | 0.20 | 0.20 | 0.07 | 0.0 | 0.0 | | ----- | ----- | | 104.92 | N/A | 106.00 |
| BRANCH - STR. 46 TO 40 | | | | | | | | | | | | | | | | |
| 46 | 0.53 | 0.44 | 4.3 | 2.00 | 0.53 | 0.44 | 0.20 | 0.01 | 0.04 | 104.82 | 0.20 | 0.04 | 104.90 | 104.70 | 105.39 | 106.47 |
| ALTERNATE HGL @ STR. 46 | | | | | | | | | | | | | | 105.29 | | |
| 41 | 0.46 | 0.15 | 100 | 2.64 | 0.17 | 0.26 | 0.36 | 0.00 | ----- | | 0.0 | 0.0 | | 108.10 | 108.57 | 109.77 |
| 40 | 0.46 | 0.10 | 110 | 2.26 | 0.14 | 0.21 | 0.26 | 0.0 | ----- | | ----- | ----- | | 111.62 | 111.87 | 112.77 |
| BRANCH - STR. 45 TO 42 | | | | | | | | | | | | | | | | |
| 45 | 0.46 | 0.26 | 23.4 | 1.88 | 0.36 | 0.36 | 0.18 | 0.0 | 0.0 | | 0.00 | 0.0 | | 104.89 | 105.39 | 106.47 |
| ALTERNATE HGL @ STR. 46 | | | | | | | | | | | | | 105.29 | | | |
| 43 | 0.46 | 0.15 | 100 | 2.64 | 0.17 | 0.26 | 0.36 | 0.0 | ----- | | 0.0 | 0.0 | | 108.10 | 108.57 | 109.77 |
| 42 | 0.46 | 0.10 | 110 | 2.26 | 0.14 | 0.21 | 0.26 | 0.0 | ----- | | ----- | ----- | | 111.62 | 111.87 | 112.77 |



Figure 7-14 Hydraulic grade line computation sheet, table A, for example 7-3.

## HYDRAULIC GRADE LINE COMPUTATION SHEET - TABLE B

COMPUTED BY _____ DATE _____ ROUTE _____
CHECKED BY _____ DATE _____ SECTION _____
PAGE _____ OF _____ COUNTY _____

| Str. ID | Pipe Losses (m) | | | | | | Structure Losses (m) | | | | | | | |
|---|---|---|---|---|---|---|---|---|---|---|---|---|---|---|
| | $H_f$ | $h_b$ | $H_c$ | $H_e$ | $H_j$ | Total | $d_{aho}$ | $K_o$ | $C_D$ | $C_d$ | $C_Q$ | $C_p$ | $C_B$ | K |
| (1) | (2) | (3) | (4) | (5) | (6) | (7) | (8) | (9) | (10) | (11) | (12) | (13) | (14) | (15) |
| 48 | | | | | | | | | | | | | | |
| 47 | 0.17 | | | | | 0.17 | 0.70 | 0.50 | | | | | | 0.5 |
| 46 | 0.04 | | | | | 0.04 | 0.49 | 0.23 | 1 | 0.45 | 1.51 | 1.02 | 1.0 | 0.16 |
| 45 | | | | | | | | | | | | | | 0.00 |
| 44 | | | | | | | 0.28 | | | | | | | |
| | | | | | | | | | | | | | | |
| | | | | | | | | | | | | | | |
| 46 | 0.04 | | | | | 0.04 | 0.45 | 1.59 | 1 | 0.45 | 0.27 | 1.02 | 1.0 | 0.20 |
| 41 | SUPERCRITICAL FLOW | | | | | 0.00 | 0.17 | SUPERCRITICAL FLOW | | | | | | 0.0 |
| 40 | SUPERCRITICAL FLOW | | | | | | 0.21 | SUPERCRITICAL FLOW | | | | | | 0.0 |
| | | | | | | | | | | | | | | |
| 45 | | | | | | | 0.41 | 1.62 | 1 | 0.47 | 0.48 | 1.0 | 1.0 | 0.36 |
| 43 | SUPERCRITICAL FLOW | | | | | 0.00 | SUPER CRITICAL FLOW | | | | | | | 0.00 |
| 42 | SUPERCRITICAL FLOW | | | | | 0.00 | SUPER CRITICAL FLOW | | | | | | | |
| | | | | | | | | | | | | | | |
| | | | | | | | | | | | | | | |



**Figure 7-15. Hydraulic grade line computation sheet, table B, for example 7-3.**

**RUN FROM STRUCTURE 48 TO 44**

*Structure 48 (Outlet)*

| | | | |
|---|---|---|---|
| *Step 1.* | *Col. 1A, 1B* | *Str. ID = 48* | *Outlet* |
| | *Col. 15A* | *Invert = 100.8 m (330.6 ft)* | *Outfall invert* |
| | | *TOC = 100.8 + 0.53* | *Top of storm drain at outfall.* |
| | | *TOC = 101.33 (332.4 ft)* | |

*Structure 47*

| | | | |
|---|---|---|---|
| *Step 2.* | *Col. 1A, 1B* | *Str. ID = 47* | *Next Structure* |
| *Step 3.* | | *HGL = 101.50 m (332.9 ft)* | *Water surface elevation in outfall channel.* |
| | | *101.50 > 101.33* | *Outlet submerged; use 101.5 as tailwater elevation. Place value at top of table A.* |
| | | *TW = 101.5 m (332.9 ft)* | |
| *Step 4.* | *Col. 2A* | *D = 0.53 m (21 inch)* | *Pipe Diameter.* |
| | *Col. 3A* | *Q = 0.44 $m^3/s$ (15.5 $ft^3/s$)* | *Conduit discharge (design value).* |
| | *Col. 4A* | *L = 17.0 m (55.8 ft)* | *Conduit length.* |
| *Step 5.* | *Col. 5A* | *V = Q/A* | *Velocity; use full barrel velocity since outlet is submerged.* |
| | | *$V = 0.44/[(\pi/4)\ (0.53)^2]$* | |
| | | *V = 1.99* | |
| | *Col. 7A* | *$V^2/2g = (1.99)^2/(2)(9.81)$* | *Velocity head in conduit.* |
| | | *= 0.20 m (0.69 ft)* | |
| *Step 6.* | *Col. 8A* | *$S_f = [(Qn)/(K_Q D^{2.67})]^2$* | *equation 7-3.* |
| | | *$S_f = [(0.44)(0.013)/(0.312)(0.53)^{2.67}]^2$* | |
| | | *$S_f = 0.010$* | |
| *Step 7.* | *Col. 2B* | *$H_f = S_f L$* | *equation 7-2* |
| | | *$H_f = (0.01)\ (17)$* | *Col. 8A x Col. 5A* |
| | | *$H_f = 0.17$ m (0.56 ft)* | |
| | | *$h_b, H_c, H_e, H_j = 0$* | |
| | | *Total = 0.17 m (0.56 ft)* | *Enter in Col. 7B and 9A* |
| *Step 8.* | *Col. 10A* | *$EGL_o$ = TW + exit loss + total pipe loss + velocity head* | *Exit loss equal to "0" since orientation of discharge is approximately equal to direction of channel flow.* |
| | | *$EGL_o = 101.5 + 0 + 0.17 + 0.20$* | |
| | | *$EGL_o = 101.87$ m (334.1 ft)* | |
| *Step 9.* | *Col. 8B* | *$d_{aho}$ = $EGL_o$ - velocity head - pipe invert* | *Col. 10A - column 7A - pipe invert* |
| | | *$d_{aho} = 101.87 - 0.20 - 100.97$* | |
| | | *$d_{aho} = 0.70$ m (2.3 ft)* | |

| | | | |
|---|---|---|---|
| *Step 10.* | *Col. 9B* | $K_e = 0.5$ | *Inflow pipe invert much higher than $d_{aho}$. Assume square edges entrance enter in Col. 15B and 11A.* |
| *Step 17.* | *Col. 12A* | $K(V^2/2g) = (0.50)(0.20)$<br>$K(V^2/2g) = 0.10$ m (0.3 ft) | *Col. 11A times Col. 7A* |
| *Step 18.* | *Col. 13A* | $EGL_i = EGL_o + K(V^2/2g)$<br>$EGL_i = 101.87 + 0.10$<br>$EGL_i = 101.97$ m (334.5 ft) | *Col. 10A plus 12A* |
| *Step 19.* | *Col. 14A* | $HGL = EGL_i - V^2/2g$<br>$HGL = 101.97 - 0.20$<br>$HGL = 101.77$ m (333.8 ft) | *Col. 13A minus Col. 7A* |
| *Step 20.* | *Col 15A* | U/S TOC = Inv. + Dia.<br>U/S TOC = 104.13 + 0.53<br>U/S TOC = 104.66 m (343.3 ft) | *Information from storm drain comp. sheet (figure 7-13).* |
| *Step 21* | *Col 16A* | Surf. Elev. = 106.00 m (347.7 ft)<br>106.00 > 101.77 | *From figure 7-12.*<br>*Surface elev. exceeds HGL, OK* |

*Structure 46*

| | | | |
|---|---|---|---|
| *Step 22.* | *Col. 1A, 1B* | Str. ID = 46 | *Next Structure* |
| *Step 3.* | | HGL = 101.77 < 104.66 = TOC<br>$HGL' = inv. + (D_c + D)/2$<br>$HGL' = 104.13 + (0.44 + 0.53)/2$<br>$HGL' = 104.58 > 101.77 = HGL$<br>HGL = 104.62 m (343.1 ft) | *HGL less than TOC at Str. 47; Outlet unsubmerged; compute alternate HGL at Str. 47 (HGL').*<br>*Case 2 applies; $d_c$ from chart 27* |
| *Step 4.* | *Col. 2A* | D = 0.53 m (21 inch) | *Pipe Diameter.* |
| | *Col. 3A* | Q = 0.44 $m^3/s$ (15.5 $ft^3/s$) | *Conduit discharge (design value).* |
| | *Col. 4A* | L = 4.30 m (14.1 ft) | *Conduit length.* |
| *Step 5.* | *Col. 5A* | V = 2.00 m/s (6.6 ft/s) | *For flow: Actual velocity from storm drain computation sheet.* |
| | *Col. 7A* | $V^2/2g = (2.00)^2/(2)(9.81)$<br>$V^2/2g = 0.20$ m (0.69 ft) | *Velocity head in conduit.* |
| *Step 6.* | *Col. 8A* | $S_f = S_o = 0.010$ | *Barrel near full; friction slope equals barrel slope.* |
| *Step 7.* | *Col. 2B* | $H_f = S_f L$<br>$H_f = (0.01)(4.30)$<br>$H_f = 0.04$ m (0.1 ft)<br>$h_b, H_c, H_e, H_j = 0$<br>Total = 0.04 m (0.1 ft) | *equation 7-2*<br>*Col. 8A x Col. 5A*<br><br><br>*Enter in Col. 7B and 9A* |

| | | | |
|---|---|---|---|
| Step 8. | Col. 10A | $EGL_o$ = HGL + total pipe loss + velocity head<br>$EGL_o = 104.62 + 0.04 + 0.20$<br>$EGL_o = 104.86$ m (343.9 ft) | Col. 14A plus Col. 9A plus Col. 7A. |
| Step 9. | Col. 8B | $d_{aho}$ = $EGL_o$ - velocity head - pipe invert<br>$d_{aho} = 104.86 - 0.20 - 104.17$<br>$d_{aho} = 0.49$ m (1.6 ft) | Col. 10A - Column 7A - pipe invert |
| Step 10. | Col. 9B | $K_o = 0.1(b/D_o)(1-\sin(\theta)) +$<br>$1.4(b/D_o)^{0.15} \sin(\theta)$<br>$b = 1.22$ m (4 ft)<br>$D_o = 0.53$ m (21 in)<br>$\theta = 180°$<br>$K_o = 0.23$ | <br>Equation 7-12; Initial loss coefficient.<br>Structure diameter.<br>Col. 3A<br>Flow deflection angle through structure. |
| Step 11. | Col. 10B | $C_D = (D_o/D_i)^3$<br>$d_{aho} = 0.45$<br>$d_{aho}/D_o = (0.45/0.53)$<br>$d_{aho}/D_o = 0.85 < 3.2$<br>$C_D = 1.0$ | equation 7-13; pipe diameter<br>Column 8B<<br>therefore |
| Step 12. | Col. 11B | $C_d = 0.5\ (d_{aho}/D_o)^{0.6}$<br>$d_{aho}/D_o = 0.85 < 3.2$<br>$C_d = 0.5\ (0.85)^{0.6}$<br>$C_d = 0.45$ | equation 7-14; flow depth correction. |
| Step 13. | Col. 12B | $C_Q = (1-2\sin\theta)(1-Q_i/Q_o)^{0.75}+1$<br>$C_Q = (1-2\sin 180)(1-0.26/0.44)^{0.75} + 1$<br>$C_Q = 1.51$ | equation 7-15; relative flow<br>$Q_o = 0.44\ m^3/s$<br>$Q_i = 0.26\ m^3/s$. |
| Step 14. | Col. 13B | $C_p = 1+0.2(h/D_o)[(h-d)/D_o]$<br>$h = 104.93 - (104.17 + 0.53/2)$<br>$h = 0.50 > 0.45 = d_{aho}$<br>$C_p = 1 + 0.2\ (0.5/0.53)[(0.5-0.45)/0.53]$<br>$C_p = 1.02$ | equation 7-16; plunging flow<br><br>$h > d_{aho}$, therefore |
| Step 15. | Col. 14B | $C_B = 1.0$ | Benching Correction, flat floor (table 7-6) |
| Step 16. | Col. 15B and 11A | $K = K_o C_D C_d C_Q C_p C_B$<br>$K = (0.23)(1.0)(0.45)(1.51)(1.02)(1.0)$<br>$K = 0.16$ | equation 7-11 |
| Step 17. | Col. 12A | $K(V^2/2g) = (0.16)(0.20)$<br>$K(V^2/2g) = 0.03$ m (0.1 ft) | Col. 11A times Col. 7A |

| | | | |
|---|---|---|---|
| *Step 18.* | *Col. 13A* | $EGL_i = EGL_o + K(V^2/2g)$<br>$EGL_i = 104.86 + 0.03$<br>$EGL_i = 104.89$ m (343.9 ft) | *Col. 10A plus 12A* |
| *Step 19.* | *Col. 14A* | $HGL = EGL_i - V^2/2g$<br>$HGL = 104.89 - 0.2$<br>$HGL = 104.69$ m (343.3) | *Col. 13A minus Col. 7A* |
| *Step 20.* | *Col 15A* | U/S TOC = Inv. + Dia.<br>U/S TOC = 104.34 + 0.46<br>U/S TOC = 104.80 m (343.7 ft) | *Information from storm drain comp. sheet (figure 7-13).* |
| *Step 21* | *Col 16A* | Surf. Elev. = 106.47 m (349.2 ft)<br>106.47 > 104.69 | *From figure 7-12.*<br>*Surface elev. exceeds HGL, OK* |

*Structure 45*

| | | | |
|---|---|---|---|
| *Step 22.* | *Col. 1A, 1B* | Str. ID = 45 | *Next Structure* |
| *Step 3.* | | HGL = 104.69 < 104.80 = TOC<br>$HGL' = inv. + (d_c + D)/2$<br>$HGL' = 104.34 + (0.36 + 0.46)/2$<br>$HGL' = 104.75 > 104.69 = HGL$<br>HGL = 104.75 m (343.6 ft) | *HGL less than TOC at Str. 46;*<br>*Outlet unsubmerged; compute alternate HGL at str. 46 (HGL').*<br>*Case 2 applies; $d_c$ from Chart 27.* |
| *Step 4.* | *Col. 2A* | D = 0.46 m (18 inch) | *Pipe Diameter.* |
| | *Col. 3A* | $Q = 0.26\ m^3/s\ (9.6\ ft^3/s)$ | *Conduit discharge (design value).* |
| | *Col. 4A* | L = 23.4 m (76.8 ft) | *Conduit length.* |
| *Step 5.* | | *Part full flow continue with Step 5A.* | |
| *Step 5A.* | | $Q/Q_f = 0.26/0.27 = 0.96$<br>$d/d_f = 0.78$<br>d = (0.78) (0.46) | *Chart 26.* |
| | *Col. 6A* | d = 0.36 m (1.2 ft) | |
| | | $V/V_f = 1.16$<br>V = (1.16) (1.62) | *Chart 26.* |
| | *Col. 5A* | V = 1.88 m/s (6.1 ft/s) | |
| | | $V^2/2g = (1.88)^2/(2)(9.81)$ | *Velocity Head* |
| | *Col. 7A* | $V^2/2g = 0.18$ m (0.59 ft) | |
| *Step 5B.* | *Col. 6bA* | $d_c = 0.36$ m (1.18 ft) | *Chart 27.* |
| *Step 5C.* | | $d = 0.36\ m = d_c$ | *Critical flow.* |
| *Step 5D.* | *Col. 7B* | *Total pipe loss = 0* | |

Structure 44

| | | | |
|---|---|---|---|
| Step 5E. | Col. 1A, 1B | Str. Id = 44 | Next structure |
| | Col. 2A | $D = 0.46$ m (18 in) | Pipe diameter |
| | Col. 3A | $Q = 0.08$ $m^3/s$ (2.8 $ft^3/s$) | Conduit discharge (design) |
| | Col. 4A | $L = 4.3$ m (14.1 ft) | Conduit length |
| Step 5F. | | Part full flow; continue with Step 5G. | |
| Step 5G. | | $Q/Q_f = 0.08/0.21 = 0.38$ | |
| | | $d/d_f = 0.43$ | Chart 26 |
| | | $d = (0.43)(0.46)$ | |
| | Col. 6aA | $d = 0.20$ m (0.66 ft) | |
| | | $V/V_f = 0.92$ | Chart 26 |
| | | $V = (1.28)(0.92)$ | |
| | Col. 5A | $V = 1.18$ (3.9 ft/s) | |
| | | $V^2/2g = (1.18)^2/(2)(9.81)$ | |
| | Col. 7A | $V^2/2g = 0.07$ m (0.23 ft) | Velocity head |
| Step 5H. | Col. 6bA | $d_c = 0.20$ m (0.65 ft) | Chart 27 |
| Step 5I. | | $d = 0.20$ m $= d_c$ | Critical flow |
| Step 5K. | Col. 11A, and 15B | $K = 0.00$ | Str. 45 line; critical flow; no structure or pipe losses. |
| | Col. 12A | $K(V^2/2g) = 0.00$ | |
| | Col. 14A | HGL = Inv. + d | HGL for Str. 45; place in Col. 14A of Str. 45 line. |
| | | = 104.53 + 0.36 | |
| | | HGL = 104.89 m (344.07 ft) | |
| Step 10b. | Col. 8B | $d_{ah} = 0.28$ m (0.9 ft) | Chart 28 |
| | | HGL = Str. 44 Inv. + $d_{aho}$ | Str. Inv. from storm drain comp. sheet. |
| | | HGL = 104.64 + 0.28 | |
| | Col. 14A | HGL = 104.92 m (344.14 ft) | |
| Step 20. | Col. 15A | U/S TOC = N/A | Upstream terminal structure. |
| Step 21. | Col. 16A | Surf. Elev. = 106.00 | From figure 7-12. |
| | | 106.00 > 104.92 | Surface elev. > HGL; OK |

**RUN FROM STRUCTURE 46 TO 40**

Structure 46

| | | | |
|---|---|---|---|
| Step 24. | Col. 1A, 1B and 10A | Str. ID = 46 | Next Structure |
| | | $EGL_o = 104.82$ m (343.8 ft) | From previous str. 46 line. |

| | | | |
|---|---|---|---|
| Step 9. | Col. 8B | $d_{aho}$ = $EGL_o$ - velocity head - pipe invert<br>$d_{aho}$ = 104.82 - 0.20 - 104.17<br>$d_{aho}$ = 0.45 m (1.6 ft) | Col. 10A - column 7A - pipe invert |
| Step 10. | Col. 9B | $K_o = 0.1(b/D_o)(1-\sin(\theta)) + 1.4(b/D_o)^{0.15}\sin(\theta)$ | Equation 7-12; Initial loss coefficient. |
| | | $b$ = 1.22 m (4 ft) | Structure diameter. |
| | | $D_o$ = 0.53 m (21 in) | Col. 3A |
| | | $\theta$ = 90° | Flow deflection angle through structure. |
| | | $K_o$ = 1.59 | |
| Step 11. | Col. 10B | $C_D = (D_o/D_i)^3$ | equation 7-13; pipe diameter |
| | | $d_{aho}$ = 0.45 | Column 8B |
| | | $d_{aho}/D_o$ = (0.45/0.53) | |
| | | $d_{aho}/D_o$ = 0.85 < 3.2 | therefore |
| | | $C_D$ = 1.0 | |
| Step 12. | Col. 11B | $C_d = 0.5\,(d_{aho}/D_o)^{0.6}$ | equation 7-14; flow depth correction. |
| | | $d_{aho}/D_o$ = 0.85 < 3.2 | |
| | | $C_d = 0.5\,(0.85)^{0.6}$ | |
| | | $C_d$ = 0.45 | |
| Step 13. | Col. 12B | $C_Q = (1-2\sin\theta)(1-Q_i/Q_o)^{0.75} + 1$ | equation 7-15; relative flow |
| | | $C_Q = (1-2\sin 90)(1-0.15/0.44)^{0.75} + 1$ | correction; $Q_o$ = 0.44 $m^3/s$ |
| | | $C_Q$ = 0.27 | $Q_i$ = 0.15 $m^3/s$. |
| Step 14. | Col. 13B | $C_p = 1 + 0.2(h/D_o)[(h-d_{aho})/D_o]$ | equation 7-16; plunging flow |
| | | $h$ = 104.93 - (104.17 - 0.53/2) | |
| | | $h$ = 0.50 > 0.45 = $d_{aho}$ | $h > d_{aho}$, therefore |
| | | $C_p = 1 + 0.2(0.50/0.53)[(0.50-0.45)/0.53]$ | |
| | | $C_p$ = 1.02 | |
| Step 15. | Col. 14B | $C_B$ = 1.0 | Benching Correction, flat floor (table 7-6) |
| Step 16. | Col. 15B and 11A | $K = K_o C_D C_d C_Q C_p C_B$ | equation 7-11 |
| | | $K$ = (1.59)(1.0)(0.45)(0.27)(1.02)(1.0) | |
| | | $K$ = 0.20 | |
| Step 17. | Col. 12A | $K(V^2/2g)$ = (0.20)(0.20) | Col. 11A times Col. 7A |
| | | $K(V^2/2g)$ = 0.04 m (0.1 ft) | |
| Step 18. | Col. 13A | $EGL_i = EGL_o + K(V^2/2g)$ | Col. 10A plus 12A |
| | | $EGL_i$ = 104.86 + 0.04 | |
| | | $EGL_i$ = 104.90 m (344.1 ft) | |

| | | | |
|---|---|---|---|
| Step 19. | Col. 14A | $HGL = EGL_i - V^2/2g$<br>$HGL = 104.90 - 0.2$<br>$HGL = 104.70$ m (343.4) | Col. 13A minus Col. 7A |
| Step 20. | Col 15A | U/S TOC = Inv. + Dia.<br>U/S TOC = 104.93 + 0.46<br>U/S TOC = 105.39 m (345.7 ft) | Information from storm drain comp. sheet (figure 7-13). |
| Step 21. | Col 16A | Surf. Elev. = 106.47 m (349.2 ft)<br>106.47 > 104.70 | From figure 7-12.<br>Surface elev. exceeds HGL, OK |

Structure 41

| | | | |
|---|---|---|---|
| Step 22. | Col. 1A, 1B | Str. ID = 41 | Next Structure |
| Step 3. | | $HGL = 104.70 < 105.39 = TOC$<br>$HGL' = inv. + (d_c + D)/2$<br>$HGL' = 104.93 + (0.26 + 0.46)/2$<br>$HGL' = 105.29 > 104.70 = HGL$<br>HGL = 105.29 m (345.4 ft) | HGL less than TOC at Str. 46; Outlet unsubmerged; compute alternate tailwater depth at Str. 46.<br>Case 2 applies; $d_c$ from chart 27 |
| Step 4. | Col. 2A | D = 0.46 m (18 inch) | Pipe Diameter. |
| | Col. 3A | $Q = 0.15\ m^3/s\ (4.9\ ft^3/s)$ | Conduit discharge (design value). |
| | Col. 4A | L = 100 m (328 ft) | Conduit length. |
| Step 5. | | Part full flow from column's 12 and 15 of storm drain combination sheet. | Continue with Step 5A. |
| Step 5A. | | $Q/Q_f = 0.15/0.52 = 0.29$<br>$d/d_f = 0.37$<br>$d = (0.37)(0.46)$ | Chart 26. |
| | Col. 6aA | d = 0.17 m (0.6 ft) | |
| | | $V/V_f = 0.83$<br>$V = (0.84)(3.14)$ | Chart 26. |
| | Col. 5A | V = 2.64 m/s (8.7 ft/s) | |
| | | $V^2/2g = (2.64)^2/(2)(9.81)$ | Velocity heads. |
| | Col. 7A | $V^2/2g = 0.36$ m (1.18 ft) | |
| Step 5B. | Col. 6bA | $d_c = 0.26$ m (0.85 ft) | Chart 27 and Step 3 this structure. |
| Step 5C. | | $d = 0.17 < 0.26 = d_c$ | Supercritical flow |
| Step 5D. | Col. 7B | Total pipe loss = 0 | |

Structure 40

| | | | |
|---|---|---|---|
| Step 5E. | Col. 1A,1B | Str. Id. = 40 | Next structure |

| | | | |
|---|---|---|---|
| | Col. 2A | $D = 0.46$ m (18 in.) | Pipe diameter |
| | Col. 3A | $Q = 0.10$ $m^3/s$ (3.5 $ft^3/s$) | Conduit discharge (design) |
| | Col. 4A | $L = 110$ M (360.8 ft) | Conduit lengths |
| Step 5F. | | Part full flow; continue with Step 5G | |
| Step 5G. | | $Q/Q_f = 0.10/0.52 = 0.19$ | |
| | | $d/d_c = 0.30$ | Chart 26. |
| | | $d = (0.30)(0.46)$ | |
| | Col. 6aA | $d = 0.14$ m (0.5 ft) | |
| | | $V/V_f = 0.74$ | Chart 26. |
| | | $V = (0.74)(3.14)$ | |
| | Col. 5A | $V = 2.26$ m/s (7.4 ft/s) | |
| | | $V^2/2g = (2.26)^2/(2)(9.81)$ | Velocity head. |
| | Col. 7A | $V^2/2g = 0.26$ m (0.9 ft) | |
| Step 5H. | Col. 6bA | $d_c = 0.21$ m (0.7 ft) | Chart 27. |
| Step 5I. | | $d = 0.14$ m $< 0.21$ m $= d_c$ | Supercritical flow |
| Step 5K. | Col. 11A, and 15AB | $K = 0.0$ | Str. 41 line; supercritical flow; |
| | Col. 12A | $K(V^2/2g) = 0$ | no structure losses. |
| | Col. 14A | HGL = Inv. + d | HGL for Str. 41; place in Column |
| | | HGL = 107.93 + 0.17 | 14A of Str. Line 41. |
| | | HGL = 108.10 m (354.65) | |
| Step 20. | Col. 15A | U/S TOC = Inv. + Dia. | Information from storm drain |
| | | U/S TOC = 108.11 + 0.46 | comp. sheet (figure 7-13) for |
| | | U/S TOC = 108.57 (356.1) | Str. 41. |
| Step 21. | Col. 16A | Surf. Elev. = 109.77 m (360.0 ft) | From figure 7-12. |
| | | 109.77 > 108.10 | Surface elev. > HGL, OK |
| Step 10b | Col. 8B | $d_{aho} = 0.21$ m (0.7 ft) | Chart 28. |
| | | HGL = Str. 40 Inv. + $d_{aho}$ | Structure Inv. from storm |
| | | HGL = 111.41 + 0.21 | drain comp. sheet. |
| | Col. 14A | HGL = 111.62 m (366.1 ft) | |
| Step 20 | Col. 15A | U/S TOC = Inv. + Dia. | Information from storm |
| | | U/S TOC = 111.41 + 0.46 | drain comp. sheet (figure |
| | | U/S TOC = 111.87 m (366.9 ft) | 7-13) for Str. 40. |
| Step 21. | Col. 16A | Surf. Elev. = 112.77 m (369.9 ft) | From figure 7-12. |
| | | 112.77 > 111.62 | Surface Elev. > HGL, OK |

***RUN FROM STRUCTURE 45 TO 42***

*Structure 45*

| | | | |
|---|---|---|---|
| *Step 24.* | *Col. 1A, 1B and 10A* | *Str. ID = 45*<br>*$EGL_o$ = "Blank"* | *Next Structure*<br>*From previous str. 45 line.* |
| *Step 9.* | *Col. 8B* | *$d_{aho}$ = "Blank"* | *Super critical flow at this structure.* |

*Structure 43*

| | | | |
|---|---|---|---|
| *Step 5E.* | *Col. 1A, 1B* | *Str. Id. = 43*<br>*D = 0.46 m (18 in.)*<br>*Q = 0.15 $m^3/s$ (5.3 $ft^3/s$)*<br>*L = 100 m (328 ft)* | *Next structure*<br>*Pipe diameter*<br>*Conduit discharge*<br>*Conduit length* |
| *Step 5F.* | | *Part full flow; continue with Step 5G* | |
| *Step 5G.* | | *$Q/Q_f$ = 0.15/0.52 = 0.29*<br>*$d/d_f$ = 0.37*<br>*d = (0.37)(0.46)* | *Chart 26.* |
| | *Col. 6aA* | *d = 0.17 m (0.6 ft)* | |
| | | *$V/V_f$ = 0.84*<br>*V = (0.84)(3.14)* | *Chart 26.* |
| | *Col. 5A* | *V = 2.64 m/s (8.7 ft/s)* | |
| | | *$V^2/2g$ $(2.64)^2/(2)(9.81)$* | *Velocity head.* |
| | *Col. 7A* | *$V^2/2g$ = 0.36 m (1.18 ft)* | |
| *Step 5H* | *Col. 6bA* | *$d_c$ = 0.26 m (0.85 ft)* | *Chart 27* |
| *Step 5I* | | *d = 0.17 < 0.26 = $d_c$* | *Supercritical flow; continue with Step 5K.* |
| *Step 5K* | *Col. 11A, and 11B*<br>*Col. 12A* | *K = 0.0*<br>*K ($V^2/2g$) = 0* | *Str. 45 line; supercritical flow; no structure losses.* |
| | *Col. 14A* | *HGL = Inv. + d*<br>*HGL = 104.53 + 0.36*<br>*HGL = 104.89 m (344.0 ft)* | *HGL for Str. 45; place in column 14A of Str. 45 line.* |
| *Step 20* | *Col. 15A* | *U/S TOC = Inv. + Dia*<br>*U/S TOC = 104.93 + 0.46*<br>*U/S TOC = 105.39 m (345.7 ft)* | *Information from storm drain comp. sheet (figure 7-13) for Str. 45.* |
| *Step 21* | *Col. 16A* | *Surf. elev. = 106.47 (349.2 ft)*<br>*106.47 > 104.89* | *From figure 7-12.*<br>*Surf. elev. > HGL, OK* |

*Structure 42*

| | | | |
|---|---|---|---|
| *Step 5E.* | *Col. 1A, 1B* | *Str. Id. = 42* | *Next structure* |
| | *Col. 2A* | *D = 0.46 m (18 in)* | *Pipe diameter* |
| | *Col. 3A* | *Q = 0.10 $m^3/s$ (3.5 $ft^3/s$)* | *Conduit discharge* |
| | *Col. 4A* | *L = 110 m (360.8 ft)* | *Conduit length* |
| *Step 5F* | | *Part full flow; continue with Step 5G.* | |
| *Step 5G* | | $Q/Q_f = 0.10/0.52 = 0.19$ | |
| | | $d/d_f = 0.30$ | *Chart 26* |
| | | $d = (0.30)(0.46)$ | |
| | *Col. 6A* | *d = 0.14 m (0.5 ft)* | |
| | | $V/V_f = 0.74$ | *Chart 26* |
| | | $V = (0.74)(3.14)$ | |
| | *Col. 5A* | $V = 2.26$ | |
| | | $V^2/2g = (2.26)^2/(2)(9.81)$ | *Velocity head* |
| | *Col. 7A* | $V^2/2g = 0.26$ *m (0.9 ft)* | |
| *Step 5H.* | *Col. 6bA* | $d_c = 0.21$ *m (0.7 ft)* | *Chart 27* |
| *Step 5I.* | | $d = 0.14\ m < 0.21\ m = d_c$ | *Supercritical flow* |
| *Step 5K.* | *Col. 11A, and 15B* | $K = 0.0$<br>$K\ (V^2/2g) = 0.0$ | *Str. 43 line; supercritical flow; no structure losses.* |
| | *Col. 14A* | *HGL = Inv. + d*<br>*HGL = 107.93 + 0.17*<br>*HGL = 108.10 m (354.6 ft)* | *HGL for Str. 43; place in column 14A of str. 43 line.* |
| *Step 20.* | *Col. 15A* | *U/S TOC = Inv. + Dia.*<br>*U/S TOC = 108.11 + 0.46*<br>*U/S TOC = 108.57 m (356.1 ft)* | *Information from storm drain comp. sheet (figure 7-3) for str. 53.* |
| *Step 21.* | *Col. 16A* | *Surf. Elev. = 109.77 m (360.0 ft)*<br>*109.77 > 108.10* | *From table 7-12*<br>*Surf. Elev. > HGL, OK* |
| *Step 10b.* | *Col. 8B* | $d_{aho} = 0.21$ *m (0.7 ft)*<br>*HGL = Str. 40 Inv. +* $d_{aho}$<br>*HGL = 111.41 + 0.21* | *Chart 28* |
| | *Col. 14A* | *HGL = 111.62 m (366.1 ft)* | *Str. 43 line.* |
| *Step 20* | *Col. 15A* | *U/S TOC = Inv. + Dia*<br>*U/S TOC = 111.41 + 0.46*<br>*U/S TOC = 111.87 m (366.9 ft)* | *Information from storm drain comp. sheet (figure 7-13) for structure 42.* |

| | | | |
|---|---|---|---|
| *Step 21.* | *Col. 16A* | *Surf. Elev. = 112.77 m*<br>*112.77 > 111.62* | *From figure 7-12*<br>*surface elev. > HGL, OK* |

*See figures 7-14 and 7-15 for the tabulation of results. The final HGL values are indicated in figure 7-12.*

*A computer solution for both parts 1 and 2 of this example is presented in appendix B.*

# 8. STORM WATER QUANTITY CONTROL FACILITIES

Land development activities, including the construction of roads, convert natural pervious areas to impervious and otherwise altered surfaces. These activities cause an increased volume of runoff because infiltration is reduced, the surface is usually smoother thereby allowing more rapid drainage, and depression storage is usually reduced. In addition, natural drainage systems are often replaced by lined channels, storm drains, and curb-and-gutter systems. These man-made systems produce an increase in runoff volume and peak discharge, as well as a reduction in the time to peak of the runoff hydrograph. This concept is illustrated by the hydrograph in figure 8-1.

The temporary storage or detention/retention of excess storm water runoff as a means of controlling the quantity and quality of storm water releases is a fundamental principle in storm water management and a necessary element of a growing number of highway storm drainage systems. Previous concepts which called for the rapid removal of storm water runoff from developed areas, usually by downstream channelization, are now being combined with methods for storing storm water runoff to prevent overloading of existing downstream drainage systems. The storage of storm water can reduce the frequency and extent of downstream flooding, soil erosion, sedimentation, and water pollution. Detention /retention facilities also have been used to reduce the costs of large storm drainage systems by reducing the required size for downstream storm drain conveyance systems. The use of detention/retention facilities can reduce the peak discharge from a given watershed, as shown in figure 8-1. The reduced post-development runoff hydrograph is typically designed so that the peak flow is equal to or less than the pre-developed runoff peak flow rate. Additionally, the volume of the post-development hydrograph is the same as the volume of the reduced post-development runoff hydrograph.



## 8.1 DESIGN OBJECTIVES

One of the fundamental objectives of storm water management is to maintain the peak runoff rate from a developing area at or below the pre-development rate to control flooding, soil erosion, sedimentation, and pollution. Design criteria related to pollution control are presented in chapter 10.

Specific design criteria for peak flow attenuation are typically established by local government bodies. Some jurisdictions also require that flow volume be controlled to pre-development levels as well. Controlling flow volume is only practical when site conditions permit infiltration. To compensate for the increase in flow volume, some jurisdictions require that the peak post-development flow be reduced to below pre-development levels.

When storm water management first became common, most detention/retention facilities were designed for control of runoff from only a single storm frequency. Typically the 2-year, 10-year, or 100-year storms were selected as the controlling criteria. However, single storm criteria have been found to be rather ineffective since such a design may provide little control of other storms. For example, design for the control of frequent storms (low return periods) provides little attenuation of less frequent but much larger storm events. Similarly, design for less frequent large storms provides little attenuation for the more frequent smaller storms. Some jurisdictions now enforce multiple-storm regulatory criteria which dictate that multiple storm frequencies be attenuated in a single design. A common criteria would be to regulate the 2-year, 10-year, and 100-year events.

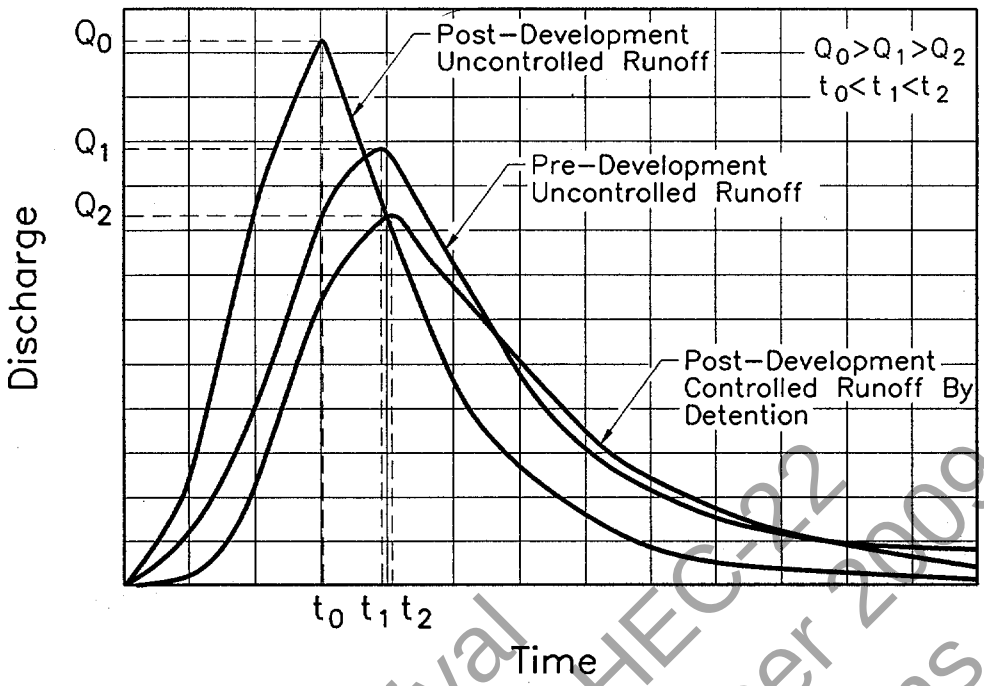


**Figure 8-1. Hydrograph schematic.**

## 8.2. ISSUES RELATED TO STORM WATER QUANTITY CONTROL FACILITIES

There are three potential problem areas associated with the design of storm water quantity control facilities which must be considered during design. These are release timing, safety, and maintenance.

### 8.2.1 Release Timing

The timing of releases from storm water control facilities can be critical to the proper functioning of overall storm water systems. As illustrated in figure 8-1, storm water quantity control structures reduce the peak discharge and increase the duration of flow events. While this is the desired result for flow tributary to an individual storm water control facility, this shifting of flow peak times and durations in some instances can cause adverse effects downstream.

For example, where the drainage area being controlled is in a downstream portion of a larger watershed, delaying the peak and extending the recession limb of the hydrograph may result in a higher peak on the main channel. As illustrated in figure 8-2, this can occur if the reduced peak on the controlled tributary watershed is delayed in such a way that it reaches the main stream at or near the time of its peak. On occasions, it has also been observed that in locations where multiple detention facilities have been installed within developing watersheds, downstream storm flooding problems continue to be noticed. In both of these cases the natural timing characteristics of the watershed are not being considered, and certainly are not being duplicated by the uncoordinated use of randomly located detention facilities. It is critical that release timing be considered in the analysis of storm water control facilities to ensure that the desired result is obtained.

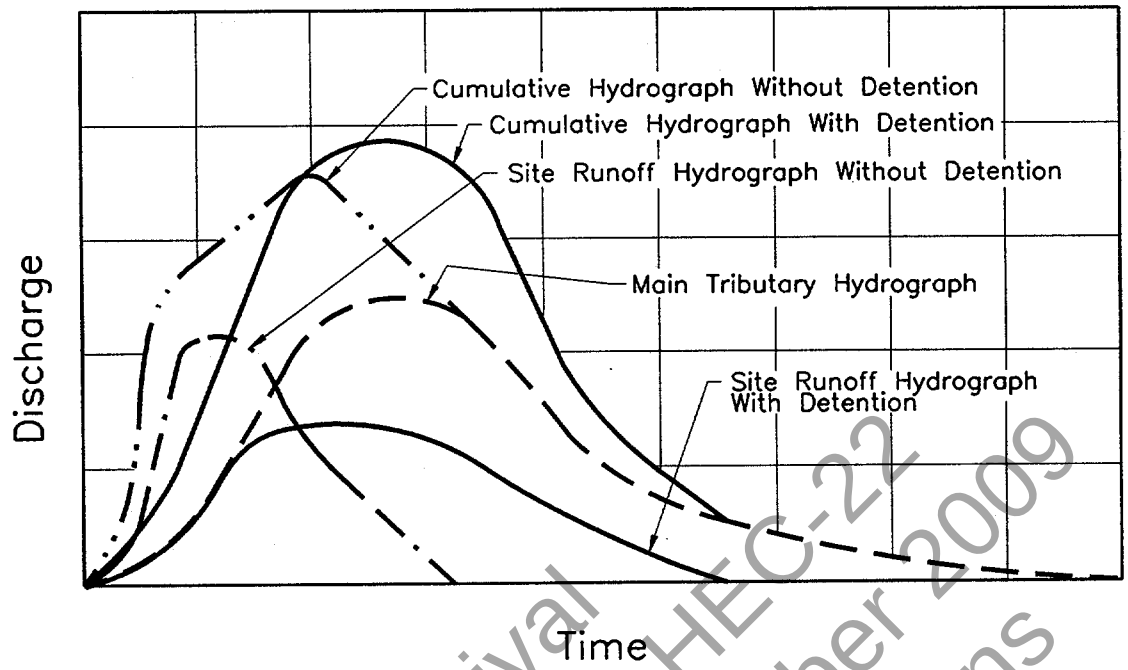


**Figure 8-2. Example of cumulative hydrograph with and without detention.**



### 8.2.2 Safety

In the design of water quantity control facilities it is important that consideration be given to the possibility that children may be attracted to the site, regardless of whether or not the site or structure is intended for their use. It is important to design and construct inflow and outflow structures with safety in mind. Considerations for promoting safety include preventing public trespass, providing emergency escape aids, and eliminating other hazards.

Removable, hydraulically-efficient grates and bars may be considered for all inlet and outlet pipes, particularly if they connect with an underground storm drain system and/or they present a safety hazard. Fences may be needed to enclose ponds under some circumstances.

Where active recreation areas are incorporated into a detention basin, very mild bottom slopes should be used along the periphery of the storage pond. Ideally, detention basins should be located away from busy streets and intersections. Outflow structures should be designed to limit flow velocities at points where people could be drawn into the discharge stream. Persons who enter a detention pond or basin during periods when storm water is being discharged may be at risk. The force of the currents may push a person into an outflow structure or may hold a victim under the water where a bottom discharge is used. Several designs precautions intended to improve safety are discussed in *Urban Stormwater Management* [12].

### 8.2.3 Maintenance

Storm water management facilities must be properly maintained if they are to function as intended over a long period of time. The following types of maintenance tasks should be performed periodically to ensure that storm water management facilities function properly:

**Inspections:** Storm water storage facilities should be inspected periodically for the first few months after construction and on an annual basis thereafter. In addition, these facilities should be inspected during and after major storm events to ensure that the inlet and outlet structures are still functioning as designed, and that no damage or clogging has occurred.

**Mowing:** Impoundments should be mowed at least twice a year to discourage woody growth and control weeds.

**Sediment, Debris and Litter Control:** Accumulated sediment, debris, and litter should be removed from detention facilities at least twice a year. Particular attention should be given to removal of sediment, debris, and trash around outlet structures to prevent clogging of the control device.

**Nuisance Control:** Standing water or soggy conditions within the lower stage of a storage facility can create nuisance conditions such as odors, insects, and weeds. Allowance for positive drainage during design will minimize these problems. Additional control can be provided by periodic inspection and debris removal, and by ensuring that outlet structures are kept free of debris and trash.

**Structural Repairs and Replacement:** Inlet and outlet devices, and standpipe or riser structures have been known to deteriorate with time, and may have to be replaced. The actual life of a structural component will depend on individual site specific criteria, such as soil conditions.



## 8.3 STORAGE FACILITY TYPES

Stormwater quantity control facilities can be classified by function as either detention or retention facilities. The primary function of detention is to store and gradually release or attenuate stormwater runoff by way of a control structure or other release mechanism. True retention facilities provide for storage of stormwater runoff, and release via evaporation and infiltration only. Retention facilities which provide for slow release of storm water over an extended period of several days or more are referred to as extended detention facilities.

### 8.3.1 Detention Facilities

The detention concept is most often employed in highway and municipal stormwater management plans to limit the peak outflow rate to that which existed from the same watershed before development for a specific range of flood frequencies. Detention storage may be provided at one or more locations and may be both above ground or below ground. These locations may exist as impoundments, collection and conveyance facilities, underground tanks, and on-site facilities such as parking lots, pavements, and basins. The facility may have a permanent pool, known as a wet pond. Wet ponds are typically used where pollutant control is important. Detention ponds are the most common type of storage facility used

for controlling stormwater runoff peak discharges. The majority of these are dry ponds which release all the runoff temporarily detained during a storm.

Detention facilities should be provided only where they are shown to be beneficial by hydrologic, hydraulic, and cost analysis. Additionally, some detention facilities may be required by ordinances and should be constructed as deemed appropriate by the governing agency. The following are design guidance and criteria for detention storage:

- Design rainfall frequency, intensity, and duration must be consistent with highway standards and local requirements.

- The facility's outlet structure must limit the maximum outflow to allowable release rates. The maximum release rate may be a function of existing or developed runoff rates, downstream channel capacity, potential flooding conditions, and/or local ordinances.

- The size, shape, and depth of a detention facility must provide sufficient volume to satisfy the projects' storage requirements. This is best determined by routing the inflow hydrograph through the facility. Section 8.4.1 outlines techniques which can be used to estimate an initial storage volume, and section 8.5 provides a discussion of storage routing techniques.

- An auxiliary outlet must be provided to allow overflow which may result from excessive inflow or clogging of the main outlet. This outlet should be positioned such that overflows will follow a predetermined route. Preferably, such outflows should discharge into open channels, swales, or other approved storage or conveyance features.

- The system must be designed to release excess stormwater expeditiously to ensure that the entire storage volume is available for subsequent storms and to minimize hazards. A dry pond, which is a facility with no permanent pool, may need a paved low flow channel to ensure complete removal of water and to aid in nuisance control.

- The facility must satisfy Federal and State statutes and recognize local ordinances. Some of these statutes are the Federal Water Pollution Control Act, Water Quality Act, and other federal, state, and local regulations such as the stipulations discussed in chapter 2.

- Access must be provided for maintenance.

- If the facility will be an "attractive nuisance" or is not considered to be reasonably safe, it may have to be fenced and/or signed.



### 8.3.2 Retention Facilities

Retention facilities as defined here include extended detention facilities, infiltration basins, and swales. In addition to stormwater storage, retention may be used for water supply, recreation, pollutant removal, aesthetics, and/or groundwater recharge. As discussed in chapter 10, infiltration facilities provide significant water quality benefits, and although groundwater recharge is not a primary goal of highway stormwater management, the use of infiltration basins and/or swales can provide this secondary benefit.

Retention facilities are typically designed to provide the dual functions of stormwater quantity and quality control. These facilities may be provided at one or more locations and may be both above ground

or below ground. These locations may exist as impoundments, collection and conveyance facilities (swales or perforated conduits), and on-site facilities such as parking lots and roadways using pervious pavements.

Design criteria for retention facilities are the same as those for detention facilities except that it may not be necessary to remove all runoff after each storm. However the following additional criteria should be applied:

*Wet Pond Facilities*

- Wet pond facilities must provide sufficient depth and volume below the normal pool level for any desired multiple use activity.
- Shoreline protection should be provided where erosion from wave action is expected.
- The design should include a provision for lowering the pool elevation or draining the basin for cleaning purposes, shoreline maintenance, and emergency operations.
- Any dike or dam must be designed with a safety factor commensurate with an earth dam and/or as set forth in State statutes.
- Safety benching should be considered below the permanent water line at the toe of steep slopes to guard against accidental drowning.

*Infiltration Facilities*

- A pervious bottom is necessary to ensure sufficient infiltration capability to drain the basin in a reasonable amount of time so that it will have the capacity needed for another event.
- Because of the potential delay in draining the facility between events, it may be necessary to increase the emergency spillway capacity and/or the volume of impoundment.
- Detailed engineering geological studies are necessary to ensure that the infiltration facility will function as planned.
- Particulates from the inflow should be removed so that they do not settle and preclude infiltration.

Reference 46 is recommended for additional information on underground detention and retention facilities.



## 8.4 PRELIMINARY DESIGN COMPUTATIONS

The final design of a detention facility requires three items. They are an inflow hydrograph (an example of which was developed in chapter 3), a stage vs. storage curve, and a stage vs. discharge curve (sometimes called a performance curve). However, before a stage vs. storage and a stage vs. discharge curve can be developed, a preliminary estimate of the needed storage capacity and the shape of the

storage facility are required. Trial computations will be made to determine if the estimated storage volume will provide the desired outflow hydrograph.

### 8.4.1 Estimating Required Storage

Estimating the required volume of storage to accomplish the necessary peak reduction is an important task since an accurate first estimate will reduce the number of trials involved in the routing procedure. The following sections present four (4) methods for determining an initial estimate of the storage required to provide a specific reduction in peak discharge. All of the methods presented provide preliminary estimates only. It is recommended that the designer apply several of the methods and a degree of judgement to determine the initial storage estimate.

#### 8.4.1.1 Hydrograph Method

To work any storage problem, the inflow hydrograph must be provided and the release rate must be assigned. With these values established, the detention basin discharge curve can be estimated and then sketched as shown in figure 8-3. The shaded area between the curves represents the estimated storage that must be provided. To determine the necessary storage, the shaded area can be planimetered or computed mathematically.

#### 8.4.1.2 Triangular Hydrograph Method

A preliminary estimate of the storage volume required for peak flow attenuation may be obtained from a simplified design procedure that replaces the actual inflow and outflow hydrographs with standard triangular shapes. This method should not be applied if the hydrographs can not be approximated by a triangular shape. This would introduce additional errors of the preliminary estimate of the required storage. The procedure is illustrated by figure 8-4. The required storage volume may be estimated from the area above the outflow hydrograph and inside the inflow hydrograph as defined by equation 8-1.

$$V_s = 0.5\, t_i\, (Q_i - Q_o) \qquad (8\text{-}1)$$

where:
- $V_s$ = storage volume estimate, $m^3$ ($ft^3$)
- $Q_i$ = peak inflow rate into the basin, $m^3/s$ ($ft^3/s$)
- $Q_o$ = peak outflow rate out of the basin, $m^3/s$ ($ft^3/s$)
- $t_i$ = duration of basin inflow, s
- $t_p$ = time to peak of the inflow hydrograph, s

The duration of basin inflow should be derived from the estimated inflow hydrograph. The triangular hydrograph procedure, originally described by Boyd [47], was found to compare favorably with more complete design procedures involving reservoir routing.

### 8.4.1.3 SCS Procedure

The Soil Conservation Service (SCS), in its TR-55 Second Edition Report [13], describe a manual method for estimating required storage volumes based on peak inflow and outflow rates. The method is based on average storage and routing effects observed for a large number of structures. A dimensionless figure relating the ratio of basin storage volume ($V_s$) to the inflow runoff volume ($V_r$) with the ratio of peak outflow ($Q_o$) to peak inflow ($Q_i$) was developed as illustrated in figure 8-5. This procedure for estimating storage volume may have errors up to 25% and, therefore, should only be used for preliminary estimates.

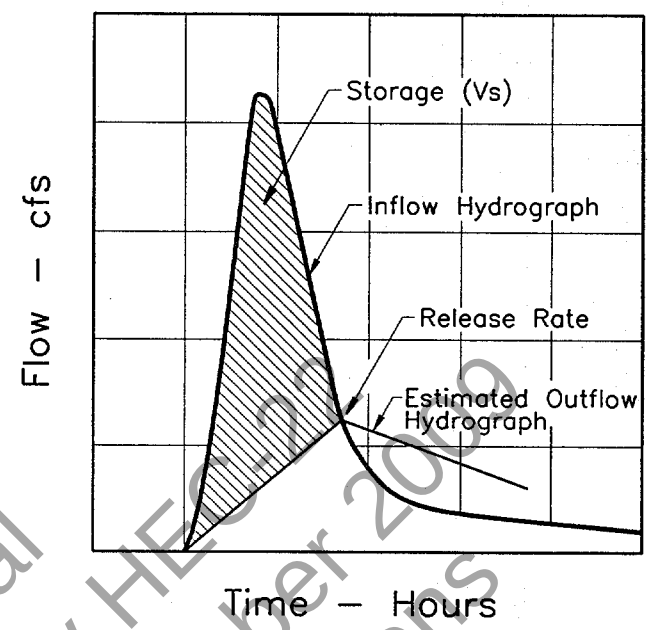


**Figure 8-3. Estimating required storage hydrograph method.**

The procedure for using figure 8-5 in estimating the detention storage required is described as follows[13]:

1. Determine the inflow and outflow discharges $Q_i$ and $Q_o$.

2. Compute the ratio $Q_o/Q_i$.

3. Compute the inflow runoff volume, $V_r$, for the design storm.

$$V_r = K_r\, Q_D\, A_m \qquad (8\text{-}2)$$

where: $V_r$ = inflow volume of runoff, ha-mm (ac-ft)
$K_r$ = 1.00 (53.33 for english units)
$Q_D$ = depth of direct runoff, mm (in)
$A_m$ = area of watershed, ha ($mi^2$)

4. Using figure 8-5, determine the ratio $V_s/V_r$.

5. Determine the storage volume, $V_s$, as

$$V_s = V_r \left(\frac{V_s}{V_r}\right) \qquad (8\text{-}3)$$

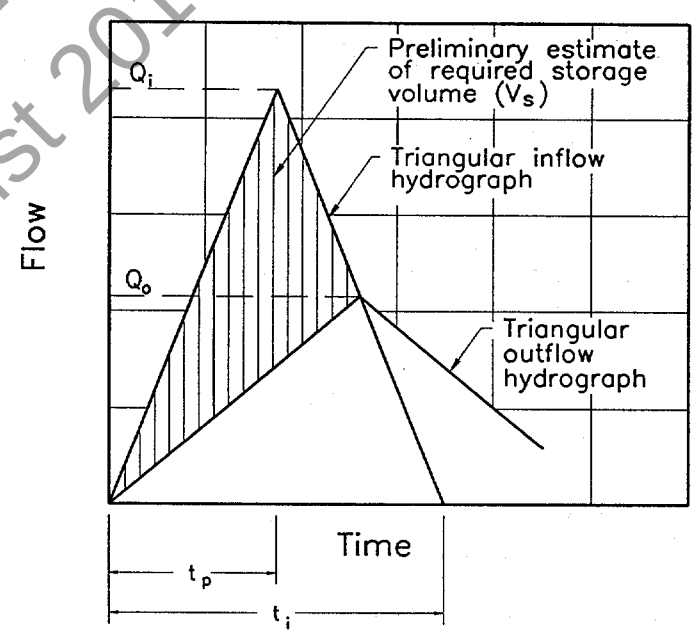


**Figure 8-4. Triangular hydrograph method.**

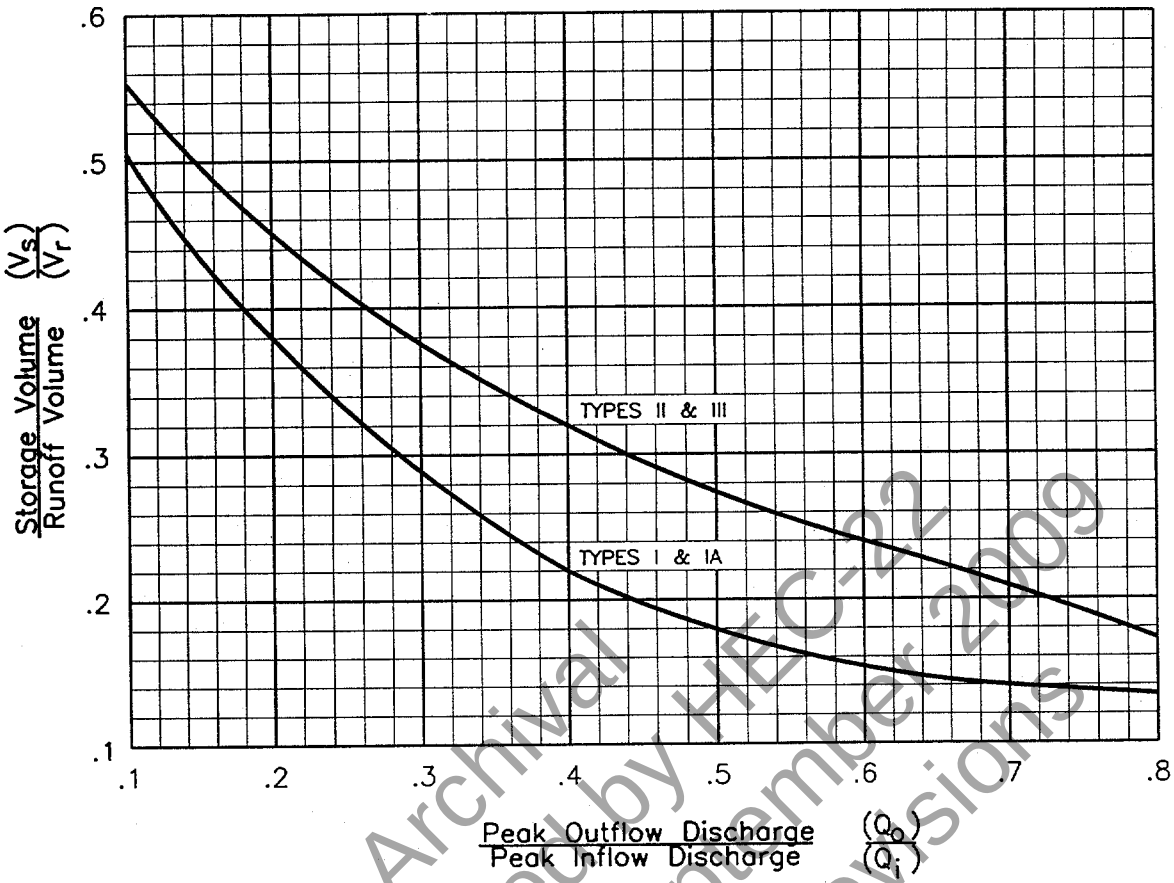


**Figure 8-5. SCS detention basin routing curves[13].**



8.4.1.4 Regression Equation

An estimate of the storage volume required for a specified peak flow reduction can be obtained by using the following regression equation procedure first presented by Wycoff & Singh in 1986[48].

1. Determine the volume of runoff in the inflow hydrograph ($V_r$), the allowable peak outflow rate ($Q_o$), the time base of the inflow hydrograph ($t_i$), and the time to peak of the inflow hydrograph ($t_p$).

2. Calculate a preliminary estimate of the ratio $V_s/V_r$ using the input data from step 1 and the following equation:

$$\left(\frac{V_s}{V_r}\right) = \left[1.291\ (1 - Q_o / Q_i)^{0.753}\right] / \left[(T_i / T_p)^{0.411}\right] \qquad (8\text{-}4)$$

3. Multiply the inflow hydrograph volume ($V_r$) times the volume ratio computed from equation 8-4 to obtain an estimate of the required storage volume.

The following example problem demonstrates the use of some of these storage volume estimation methods.

***Example 8-1***

***Given:*** *The post-developed (improved conditions) hydrograph from example 3-9 and a limiting outflow rate from the proposed detention facility of 0.55 $m^3/s$ (19.4 $ft^3/s$). This limiting outflow is a constraint imposed by the downstream receiving water course and is the maximum outflow rate from the drainage area for unimproved conditions.*

***Find:*** *The estimated required storage of a detention facility by using the:*
*(1) Hydrograph Method*
*(2) Triangular hydrograph method*
*(3) SCS Procedure*
*(4) Regression Equation*

***Solution: (1) - Hydrograph Method***

*Figure 3-10 illustrates the existing conditions and proposed conditions hydrographs. Assuming the proposed detention facility should produce an outflow hydrograph similar to existing conditions, the required detention volume is determined as the area above the existing hydrograph and below the proposed hydrograph. Planimetering this area yields an area of 9 square centimeters (1.4 square inches), which converts to the following volume:*

$$V_s = (9 \text{ sq cm})\ (109\ m^3/cm^2) = 980\ m^3\ (34{,}580\ ft^3)$$

***Solution: (2) - Triangular hydrograph method***

*From example 3-8, the duration of basin inflow ($t_i$) is 1.43 hours (5148 seconds) and the inflow rate into the detention basin ($Q_i$) is 0.88 $m^3/s$ (31.1 $ft^3/s$). Due to a local ordinance, the peak flow rate out of the basin ($Q_o$) is set to be = 0.55 $m^3/s$ (19.4 $ft^3/s$).*

*Using equation 8-1, the initial storage volume is computed as:*

$$V_s = 0.5\ t_i\ (Q_i - Q_o)$$
$$V_s = (0.5)(5148)(0.88 - 0.55) = 849\ m^3\ (29980\ ft^3)$$

***Solution: (3) - SCS Procedure***

*Step 1.* *From example 3-8, the inflow discharge is 0.88 $m^3/s$ (31.1 $ft^3/s$); and the outflow discharge is set to be = 0.55 $m^3/s$ (19.4 $ft^3/s$) by local ordinance.*

*Step 2.* *The ratio of basin inflow to basin outflow is:*

$$Q_o / Q_i = 0.55 / 0.88 = 0.63$$

*Step 3.* *The inflow runoff ($V_r$) is computed using equation 8-2. The depth of direct runoff ($Q_D$) is given to be 11 mm (0.4 in) and the area of the basin is 17.55 ha (43.37 ac).*

$$V_r = K_r\ Q_D\ A_m$$
$$V_r = (1.00)(11)(17.55) = 193 \text{ ha-mm}$$
$$V_r = (193 \text{ ha-mm})(10{,}000\ m^2/ha)(1m/1000mm) = 1930\ m^3\ (68160\ ft^3)$$

*Step 4.* *With $Q_o / Q_i = 0.63$ and a Type II Storm, use figure 8-5 to determine $V_s / V_r$.*

$$V_s / V_r = 0.23$$

*Step 5.* *The preliminary estimated storage volume ($V_s$) is determined from equation 8-3:*

$$V_s = V_r (V_s / V_r) = (1930)(0.23)$$
$$V_s = 444\ m^3\ (15680\ ft^3)$$

***Solution: (4) - Regression Equation***

*Step 1.* *From solution 2, the volume of direct runoff ($V_r$) is 1930 $m^3$. The peak outflow rate ($Q_o$) is 0.55 $m^3/s$ and from example 3-8, the time base of the inflow hydrograph ($t_i$) is 1.43 hours and the time to peak of the inflow hydrograph ($t_p$) is 0.51 hours.*

*Step 2.* *Using equation 8-4, the ratio $V_s / V_r$ is:*

$$V_s / V_r = [1.291\ (1 - Q_o/Q_i)^{0.753}] / [(T_i / T_p)^{0.411}]$$
$$V_s / V_r = [(1.291)\ \{1 - (0.55/0.88)\}^{0.753}] / [(1.43/0.51)^{0.411}]$$
$$V_s / V_r = 0.40$$

*Step 3.* *The estimated storage is:*

$$V_s = V_r (V_s / V_r) = (1930)(0.40)$$
$$V_s = 772\ m^3\ (27260\ ft^3)$$

*The hydrograph, triangular hydrograph, and regression methods result in the most consistent estimates.*

### 8.4.2 Estimating Peak Flow Reduction

Similarly, if a storage volume is known and you want to estimate the peak discharge, two methods can be used. First, the TR-55 method as demonstrated in figure 8-5 can be solved backwards for the ratio of $Q_o/Q_i$. Secondly, a preliminary estimate of the potential peak flow reduction can be obtained by rewriting the regression equation 8-4 in terms of discharges. This use of the regression equations is demonstrated below.

1. Determine the volume of runoff in the inflow hydrograph ($V_r$), the peak flow rate of the inflow hydrograph ($Q_i$), the time base of the inflow hydrograph ($T_i$), the time to peak of the inflow hydrograph ($T_p$), and the storage volume ($V_s$).

2. Calculate a preliminary estimate of the potential peak flow reduction for the selected storage volume using the following equation [2].

$$\left(\frac{Q_o}{Q_i}\right) = 1 - 0.712\ (V_s / V_r)^{1.328}\ (T_i / T_p)^{0.546} \qquad (8\text{-}5)$$

3. Multiply the peak flow rate of the inflow hydrograph ($Q_i$) times the potential peak flow reduction ratio calculated from step 2 to obtain the estimated peak outflow rate ($Q_o$) for the selected storage volume.

### 8.4.3 Stage-Storage Relationship

A stage-storage relationship defines the relationship between the depth of water and storage volume in the storage facility. The volume of storage can be calculated by using simple geometric formulas expressed as a function of storage depth. This relationship between storage volume and depth defines the stage-storage curve. A typical stage-storage curve is illustrated in figure 8-6. After the required storage has been estimated, the configuration of the storage basin must be determined so that the stage-storage curve can be developed. The following relationships can be used for computing the volumes at specific depths of geometric shapes commonly used in detention facilities.

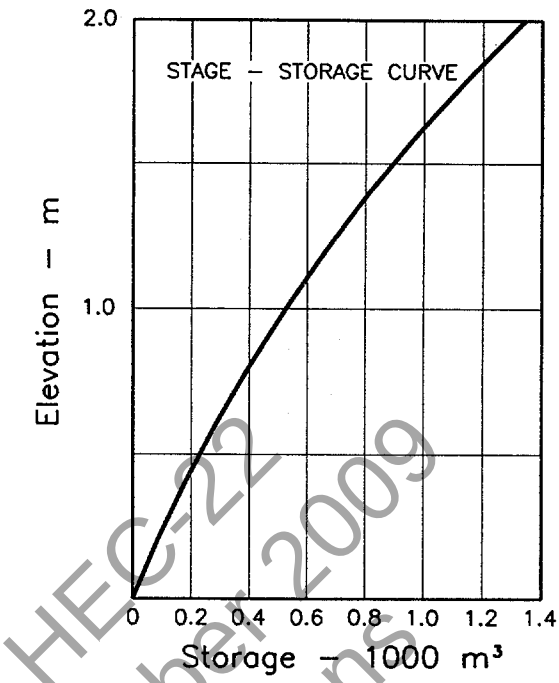


**Figure 8-6. Stage-storage curve.**

**Rectangular Basins:** Underground storage tanks are often rectangular. The volume of a rectangular basin can be computed by dividing the volume into triangular and rectangular shapes and using equation 8-6. The variables in equation 8-6 are illustrated in figure 8-7.

$$\text{Box:} \quad V = L\,W\,D \qquad \text{Triangle:} \quad V = \frac{1}{2}\,W\,\frac{D^2}{S} \tag{8-6}$$

where:
- V = volume at a specific depth, $m^3$ ($ft^3$)
- D = depth of ponding for that shape, m (ft)
- W = width of basin at base, m (ft)
- L = length of basin at base, m (ft)
- S = slope of basin, m/m (ft/ft)

If the basin is not on a slope, then the geometry will consist only of rectangular shaped boxes.

**Trapezoidal Basins:** The volume of a trapezoidal basin can be calculated in a manner similar to that of rectangular basins by dividing the volume into triangular and rectangular shaped components and applying equation 8-7. The variables in equation 8-7 are illustrated in figure 8-8. "Z" in this equation is the ratio of the horizontal to vertical components of the side slope. For example, if the side slope is 1 to 2 (V:H), "Z" will be equal to 2.

$$V = LWD + (L+W)ZD^2 + \frac{4}{3}Z^2D^3 \tag{8-7}$$

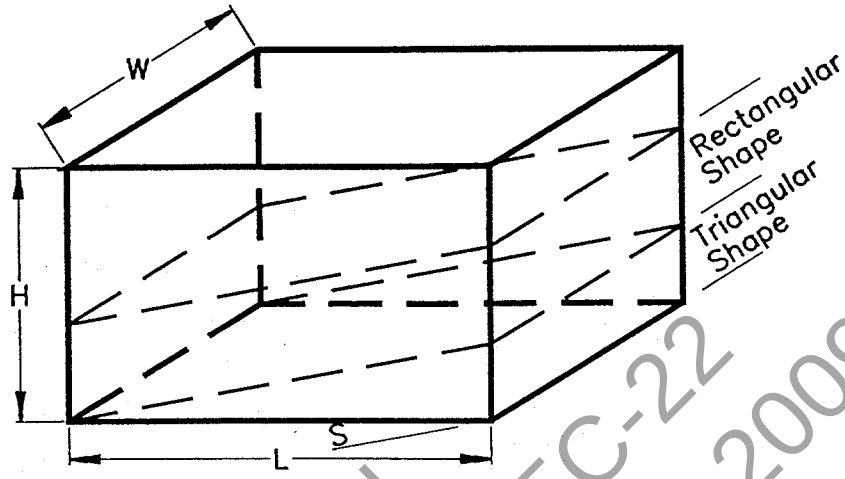


**Figure 8-7. Rectangular basin.**



where: V = volume at a specific depth, $m^3$ ($ft^3$)
D = depth of ponding or basin, m (ft)
L = length of basin at base, m (ft)
W = width of basin at base, m (ft)
r = ratio of width to length of basin at the base
Z = side slope factor; ratio of horizontal to vertical components of side slope

Estimating the trial dimensions of a basin for a given basin storage volume can be accomplished by rearranging equation 8-7 as shown in equation 8-8. The use of equation 8-8 is demonstrated in example 8-2.

$$L = \frac{-ZD(r+1) + [(ZD)^2 (r+1)^2 - 5.33(ZD)^2 r + \frac{4rV}{D}]^{0.5}}{2r} \qquad (8\text{-}8)$$

**Pipes and Conduits:** If pipes or other storm drain conduits are used for storage, positive slope should be provided to transport sediment. This complicates storage calculations. The prismoidal formula presented in equation 8-9 can be used to determine the volume in sloping storm drain pipes. Figure 8-9 provides a definition sketch for the terms in equation 8-9.

$$V = \frac{L}{6}(A_1 + 4M + A_2) \qquad (8\text{-}9)$$

where: V = volume of storage, $m^3$ ($ft^3$)
L = length of section, m (ft)
$A_1$ = cross-sectional area of flow at base, $m^2$ ($ft^2$)

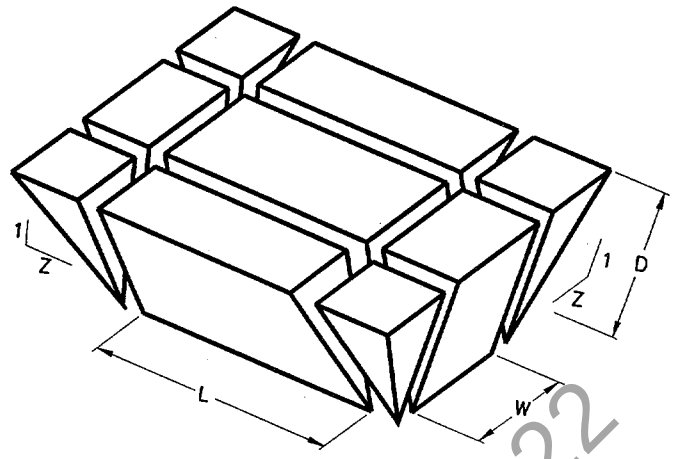


**Figure 8-8. Trapezoidal Basin**

$A_2$ = cross-sectional area of flow at top, $m^2$ ($ft^2$)
M = cross-sectional area of flow at midsection, $m^2$ ($ft^2$)

Calculations will be simplified if circular pipes are used, since the ungula of a cone and cylinder formulas may be used. The storage volume in a circular pipe, illustrated in figure 8-10, can be computed using equation 8-10.

$$V = H \frac{(2/3\ a^3 \pm c\ B)}{r \pm c} \tag{8-10}$$

where: V = volume of ungula, $m^3$ ($ft^3$)
B = cross-sectional area of flow, $m^2$ ($ft^2$)
H = wetted pipe length, m (ft)
r = pipe radius, m (ft)
a, c, and $\alpha$ (radians) are as defined in figure 8-10 (a and c have units of m (ft)) and

$$a = \sqrt{(2r - d)\ d} \tag{8-11}$$

$$c = d - r \tag{8-12}$$

$$\alpha = 2 \sin^{-1}\left(\frac{a}{r}\right) \tag{8-13}$$

where: d = flow depth in pipe, m (ft)

To assist in the determination of the cross-sectional area of the flow, B, equation 8-14 can be used to find the area of the associated circular segment.

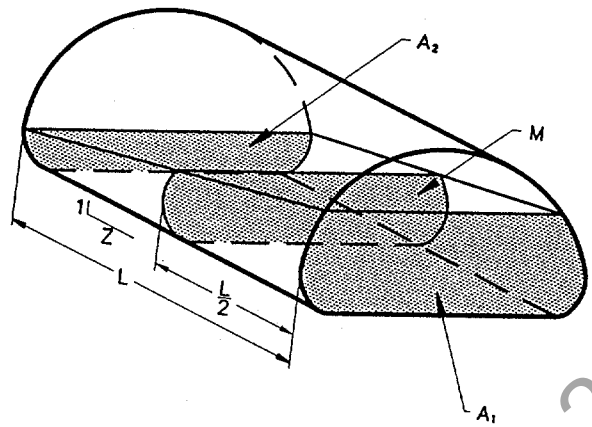


**Figure 8-9. Definition sketch for prismoidal formula.**

$$A_s = (\alpha - \sin\alpha)\frac{r^2}{2} \tag{8-14}$$

where: $A_s$ = the segment area, $m^2$ ($ft^2$)

Using equation 8-10, the wetted area is computed as follows:

For $d \leq r$ ; $B = A_s$
For $d > r$ ; $B = A - A_s$

Alternatively, various texts such as reference 49 contain tables and charts which can be used to determine the depths and areas described in the above equations.

**Natural Basins:** The storage volume for natural basins in irregular terrain is usually developed using a topographic map and the double-end area or frustum of a pyramid formulas. The double-end area formula is expressed as:

$$V_{1,2} = [(A_1 + A_2) / 2]\ d \tag{8-15}$$

where: $V_{1,2}$ = storage volume between elevations 1 and 2, $m^3$ ($ft^3$)
$A_1$ = surface area at elevation 1, $m^2$ ($ft^2$)
$A_2$ = surface area at elevation 2, $m^2$ ($ft^2$)
$d$ = change in elevation between points 1 and 2, m (ft)

The frustum of a pyramid is shown in figure 8-11 and is expressed as:

where: $V$ = volume of frustum of a pyramid, $m^3$ ($ft^3$)

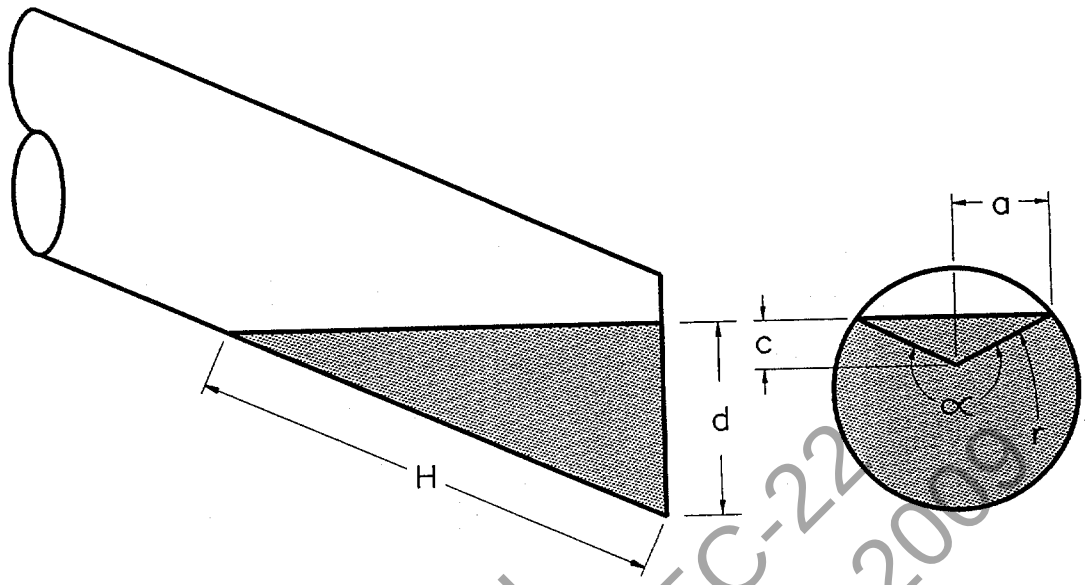


**Figure 8-10. Ungula of a cone.**

$$V = d\,[A_1 + (A_1\,A_2)^{0.5} + A_2] / 3 \qquad (8\text{-}16)$$

$A_1$ = surface area at elevation 1, $m_2$ ($ft^2$)
$A_2$ = surface area at elevation 2, $m_2$ ($ft^2$)
d = change in elevation between points 1 and 2, m (ft)

The following examples illustrate the development of a stage-storage relationship.

***Example 8-2***

***Given:*** *Estimated Storage Volume (V) = 850 $m^3$ (30,017 $ft^3$) (selecting the triangular hydrograph from example 8-1 since it is the middle value).*
*Depth Available for Storage During 10-yr Event (D) = 1.6 m (5.3 ft)*
*Available Freeboard = 0.6 m*
*Basin Side Slopes (Z) = 3 (V:H = 1:3)*
*Width to Length Ratio of Basin (r) = 1/2*

***Find:*** *(1) The dimensions of the basin at its base.*

*(2) Develop a stage-storage curve for the basin assuming that the base elevation of the basin is 10.0 m (32.8 ft) and the crest of the embankment is at 12.2 m (40.0 ft). (This crest elevation is determined by adding the 1.6 m of available depth plus the 0.6 m of freeboard.)*

***Solution:*** *(1) Substituting the given values in equation 8-8 yields the following:*

*L = 25.2 m (82.7 ft)*
*Use L = 26 m (85 ft)*
*W = 0.5 L = 13 m (42.7 ft)*

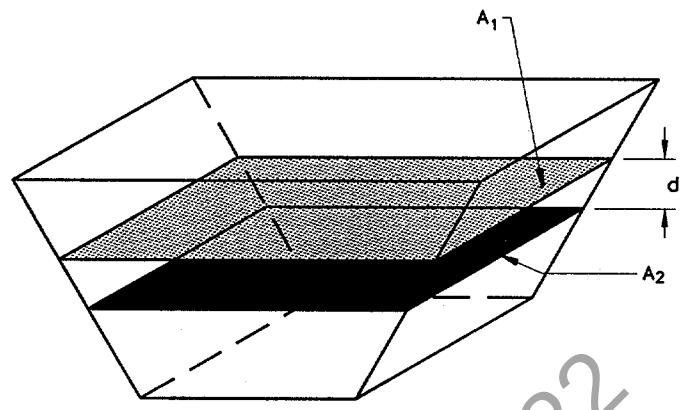


**Figure 8-11. Frustum of a pyramid.**

$$L = \frac{-ZD(r+1) + [(ZD)^2 (r+1)^2 - 5.33(ZD)^2 r + \frac{4rV}{D}]^{0.5}}{2r}$$

$$L = \frac{(-3)\ (1.6)\ (0.5+1) + [(3 \cdot 1.6)^2\ (0.5+1)^2 - 5.33\ (3 \cdot 1.6)^2\ (0.5) + \frac{4\ (0.5)\ (850)}{1.6}]^{0.5}}{2\ (0.5)}$$

*Use 26 m by 13 m basin (85 ft by 43 ft)*

(2) *By varying the depth (D) in equation 8-7, a stage-storage relationship can be developed for the trapezoidal basin sized in part 1. The following table summarizes the results:*

| DEPTH | | STAGE | | STORAGE VOLUME | |
|---|---|---|---|---|---|
| (m) | (ft) | (m) | (ft) | ($m^3$) | (ac-ft) |
| 0.00 | 0.0 | 10.0 | 32.8 | 0 | 0.000 |
| 0.20 | 0.7 | 10.2 | 33.5 | 72 | 0.059 |
| 0.40 | 1.3 | 10.4 | 34.1 | 155 | 0.125 |
| 0.60 | 2.0 | 10.6 | 34.8 | 248 | 0.201 |
| 0.80 | 2.6 | 10.8 | 35.4 | 353 | 0.286 |
| 1.00 | 3.3 | 11.0 | 36.1 | 470 | 0.381 |
| 1.20 | 3.9 | 11.2 | 36.7 | 600 | 0.486 |
| 1.40 | 4.6 | 11.4 | 37.4 | 744 | 0.603 |
| 1.60 | 5.2 | 11.6 | 38.0 | 902 | 0.731 |
| 1.80 | 5.9 | 11.8 | 38.7 | 1075 | 0.871 |
| 2.00 | 6.6 | 12.0 | 39.4 | 1264 | 1.024 |

*Figure 8-6 illustrates the stage-storage relationship. A computer solution for the stage-storage relationship developed in part 2 of the example problem is presented in appendix B.*

***Example 8-3***

***Given:*** *Given a storm drain pipe having the following properties:*

*Diameter = 1500 mm (60 in)* *Pipe Slope = 0.01 m/m (ft/ft)*
*Pipe Length = 250 m (820 ft)* *Invert Elevation = 30 m (98 ft)*

***Find:*** *Develop a stage-storage tabulation between elevations 30 m (98 ft) and 31.5 m (103 ft)*

***Solution:*** *Solve for the volume of storage using equations 8-10 and 8-14.*

$$V = H\,\frac{(2/3\ a^3 \pm cB)}{r \pm c}\,, \qquad A_s = (\alpha - \sin\alpha)\,\frac{r^2}{2}$$

*Note that:* $B = A_s$ *for* $d \le r$
$B = A - A_s$ *for* $d > r$
*where* $A_s$ *is the segment area and A is the total pipe area. The solution is provided in tabular form as follows:*

| d | | a | | c | | H | | alpha | B | | V | |
|---|---|---|---|---|---|---|---|---|---|---|---|---|
| (m) | (ft) | (m) | (ft) | (m) | (ft) | (m) | (ft) | (rad) | (m^2) | (ft^2) | (m^3) | (ft^3) |
| 0.00 | 0.0 | 0.00 | 0.00 | -0.75 | -2.46 | 0.0 | 0.0 | 0.000 | 0.00 | 0.0 | 0.00 | 0.0 |
| 0.20 | 0.7 | 0.51 | 1.67 | -0.55 | -1.80 | 20.0 | 66.0 | 1.495 | 0.14 | 1.5 | 1.18 | 41.6 |
| 0.40 | 1.3 | 0.66 | 2.18 | -0.35 | -1.15 | 40.0 | 131.0 | 2.171 | 0.38 | 4.1 | 6.31 | 222.8 |
| 0.60 | 2.0 | 0.74 | 2.41 | -0.15 | -0.49 | 60.0 | 197.0 | 2.739 | 0.66 | 7.1 | 16.69 | 588.8 |
| 0.80 | 2.6 | 0.75 | 2.45 | 0.05 | 0.16 | 80.0 | 262.0 | 3.008 | 0.96 | 10.3 | 32.87 | 1159.9 |
| 1.00 | 3.3 | 0.71 | 2.32 | 0.25 | 0.82 | 100.0 | 328.0 | 2.462 | 1.25 | 13.5 | 54.98 | 1940.0 |
| 1.20 | 3.9 | 0.60 | 1.97 | 0.45 | 1.48 | 120.0 | 394.0 | 1.855 | 1.52 | 16.3 | 82.67 | 2917.3 |
| 1.40 | 4.6 | 0.37 | 1.23 | 0.65 | 2.13 | 140.0 | 459.0 | 1.045 | 1.72 | 18.5 | 115.09 | 4061.1 |
| 1.50 | 4.9 | 0.00 | 0.00 | 0.75 | 2.46 | 150.0 | 492.0 | 0.000 | 1.77 | 19.01 | 132.54 | 4676.9 |

*A computer solution for the stage-discharge of the pipe is presented in appendix B.*



### 8.4.4 Stage-Discharge Relationship (Performance Curve)

A stage-discharge (performance) curve defines the relationship between the depth of water and the discharge or outflow from a storage facility. A typical storage facility will have both a principal and an emergency outlet. The principal outlet is usually designed with a capacity sufficient to convey the design flood without allowing flow to enter the emergency spillway. The structure for the principal outlet will typically consist of a pipe culvert, weir, orifice, or other appropriate hydraulic control device. Multiple outlet control devices are often used to provide discharge controls for multiple frequency storms.

Development of a composite stage-discharge curve requires consideration of the discharge rating relationships for each component of the outlet structure. The following sections present design relationships for typical outlet controls.

### 8.4.4.1 Orifices

For a single orifice as illustrated in figure 8-12 (a), orifice flow can be determined using equation 8-17.

$$Q = C_o A_o (2gH_o)^{0.5} \qquad (8\text{-}17)$$

where:
- $Q$ = the orifice flow rate, $m^3/s$ ($ft^3/s$)
- $C_o$ = discharge coefficient (0.40 - 0.60)
- $A_o$ = area of orifice, $m^2$ ($ft^2$)
- $H_o$ = effective head on the orifice measured from the centroid of the opening, m (ft)
- $g$ = gravitational acceleration, 9.81 $m/s^2$ (32.2 $ft/s^2$)

If the orifice discharges as a free outfall, then the effective head is measured from the centerline of the orifice to the upstream water surface elevation. If the orifice discharge is submerged, then the effective head is the difference in elevation of the upstream and downstream water surfaces. This latter condition of a submerged discharge is shown in figure 8-12(b).

For square-edged, uniform orifice entrance conditions, a discharge coefficient of 0.6 should be used. For ragged edged orifices, such as those resulting from the use of an acetylene torch to cut orifice openings in corrugated pipe, a value of 0.4 should be used.

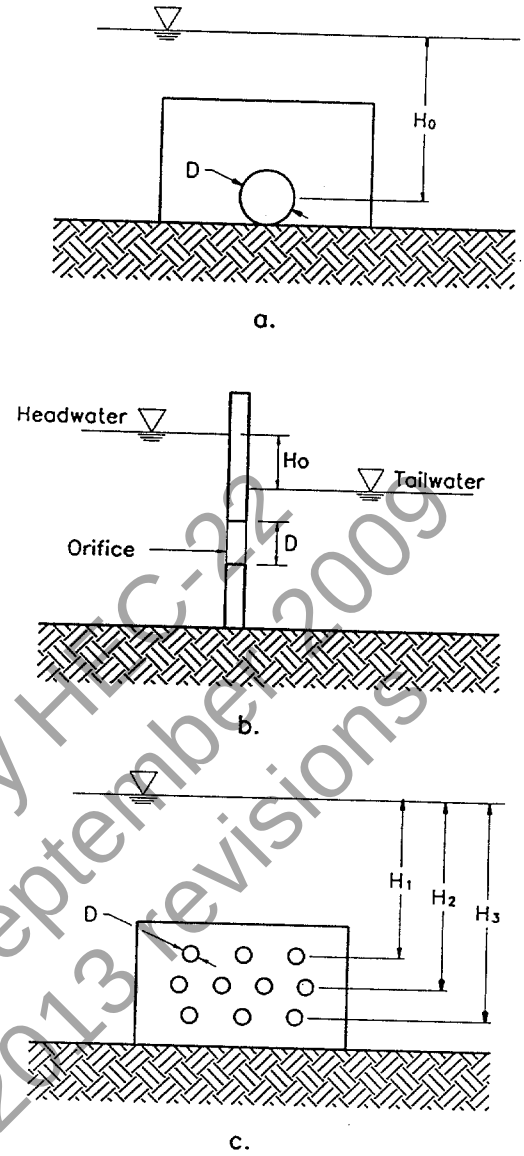


**Figure 8-12. Definition Sketch for Orifice Flow.**

For circular orifices with $C_o$ set equal to 0.6, the following equation results:

$$Q = K_{or} D^2 H_o^{0.50} \qquad (8\text{-}18)$$

where:
- $K_{or}$ = 2.09 in S.I. units (3.78 in english units)
- $D$ = orifice diameter, m (ft)

Pipes smaller than 0.3 m (1 ft) in diameter may be analyzed as a submerged orifice as long as $H_o/D$ is greater than 1.5. Pipes greater than 0.3 m (1 ft) in diameter should be analyzed as a discharge pipe with headwater and tailwater effects taken into account, not just as an orifice.

Flow through multiple orifices (see figure 8-12(c)) can be computed by summing the flow through individual orifices. For multiple orifices of the same size and under the influence of the same effective

head, the total flow can be determined by multiplying the discharge for a single orifice by the number of openings. The procedure is demonstrated in the following example:

***Example 8-4***

***Given:*** *Given the orifice plate in figure 8-12 (c) with a free discharge and:*

| | |
|---|---|
| *orifice diameter* | = *25 mm (1.0 in)* |
| $H_1$ | = *1.1 m (3.6 ft)* |
| $H_2$ | = *1.2 m (3.9 ft)* |
| $H_3$ | = *1.3 m (4.3 ft)* |

***Find:*** *Total discharge through the orifice plate.*

***Solution:*** *Using a modification of equation 8-18 for multiple orifices,*

$$Q_i = K D^2 (H_i)^{0.5} N_i$$
$$Q_i = (2.09)(0.025)^2 (H_i)^{0.5} N_i = 0.0013 H_i^{0.5} N_i$$

$$Q_1 = 0.0013 (1.1)^{0.5} (3) = 0.0040$$
$$Q_2 = 0.0013 (1.2)^{0.5} (4) = 0.0058$$
$$Q_2 = 0.0013 (1.3)^{0.5} (3) = 0.0045$$

$$Q_{total} = Q_1 + Q_2 + Q_3 = 0.0143\ m^3/s\ (0.50\ ft^3/s)$$

***Example 8-5***

***Given:*** *Given the circular orifice in figure 8-12(a) with:*

| | |
|---|---|
| *orifice diameter* | = *0.15 m (0.5 ft)* |
| *orifice invert* | = *10.0 m (32.8 ft)* |
| *discharge coeff.* | = *0.60* |

***Find:*** *The stage - discharge rating between 10 m (32.8 ft) and 12.0 m (39.4 ft).*

***Solution:*** *Using equation 8-18 with D = 0.15 m yields the following relationship between the effective head on the orifice ($H_o$) and the resulting discharge:*

$$Q = 0.047 H_o^{0.5}$$
$$H_o = \text{Depth} - D/_2$$

*The solution of this equation in table form is as follows:*

***Stage Discharge Tabulation***

| DEPTH | | STAGE | | DISCHARGE | |
|---|---|---|---|---|---|
| *(meters)* | *(feet)* | *(meters)* | *(feet)* | *($m^3/s$)* | *($ft^3/s$)* |
| 0.00 | 0.0 | 10.0 | 32.8 | 0.000 | 0.00 |
| 0.20 | 0.7 | 10.2 | 33.5 | 0.011 | 0.37 |
| 0.40 | 1.3 | 10.4 | 34.1 | 0.024 | 0.83 |
| 0.60 | 2.0 | 10.6 | 34.8 | 0.032 | 1.11 |
| 0.80 | 2.6 | 10.8 | 35.4 | 0.038 | 1.34 |
| 1.00 | 3.3 | 11.0 | 36.1 | 0.043 | 1.53 |
| 1.20 | 3.9 | 11.2 | 36.7 | 0.048 | 1.70 |
| 1.40 | 4.6 | 11.4 | 37.4 | 0.053 | 1.85 |
| 1.60 | 5.2 | 11.6 | 38.0 | 0.057 | 2.00 |
| 1.80 | 5.9 | 11.8 | 38.7 | 0.061 | 2.13 |
| 2.00 | 6.6 | 12.0 | 39.4 | 0.064 | 2.26 |

8.4.4.2 Weirs

Relationships for sharp-crested, broad-crested, V-notch, and proportional weirs are provided in the following sections:

**Sharp Crested Weirs**

Typical sharp crested weirs are illustrated in figure 8-13. Equation 8-19 provides the discharge relationship for **sharp crested weirs** with no end contractions (illustrated in figure 8-13a).

$$Q = C_{scw} L H^{1.5} \tag{8-19}$$

where: Q = discharge, $m^3/s$ ($ft^3/s$)
L = horizontal weir length, m (ft)
H = head above weir crest excluding velocity head, m (ft)
$C_{SCW}$ = 1.81 + 0.22 ($H/H_c$) [3.27 + 0.4 ($H/H_c$) in English units]

As indicated above, the value of the coefficient $C_{SCW}$ is known to vary with the ratio $H/H_c$ (see figure 8-13c for definition of terms). For values of the ratio $H/H_c$ less than 0.3, a constant $C_{SCW}$ of 1.84 (3.33 in english units) is often used.

Equation 8-20 provides the discharge equation for **sharp-crested weirs with end contractions** (illustrated in figure 8-13(b)). As indicated above, the value of the coefficient $C_{scw}$ is known to vary with the ratio $H/H_c$ (see figure 8-13c for definition of terms). For values of the ratio $H/H_c$ less than 0.3, a constant $C_{scw}$ of 1.84 (3.33 in english units) is often used.

$$Q = C_{SCW} (L - 0.2 H) H^{1.5} \tag{8-20}$$

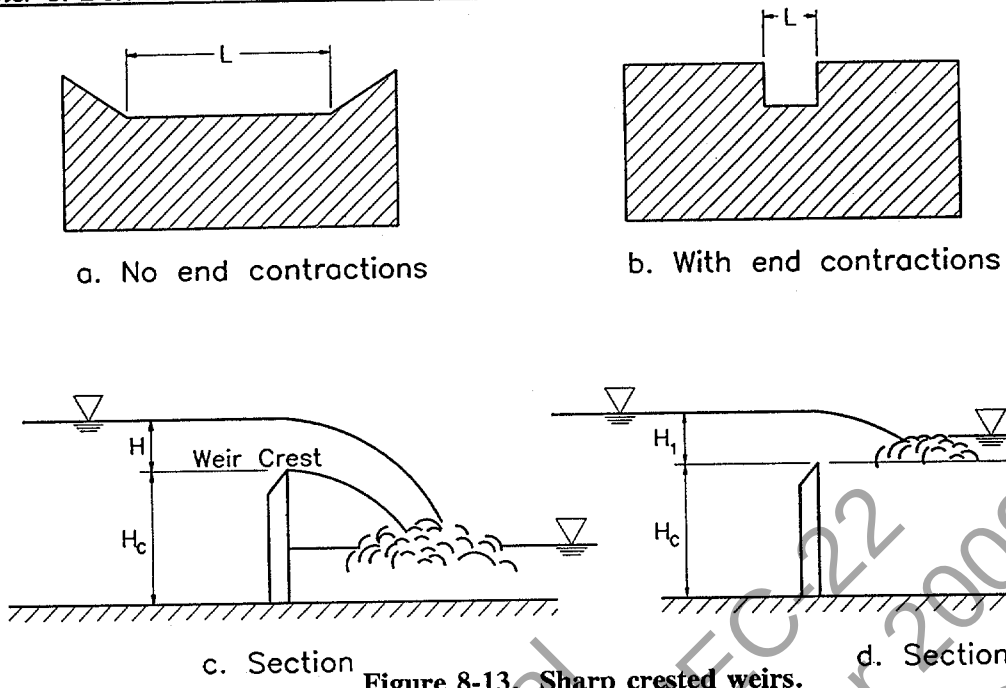


**Figure 8-13. Sharp crested weirs.**

Sharp-crested weirs will be effected by submergence when the tailwater rises above the weir crest elevation, as shown in figure 8-13(d). The result will be that the discharge over the weir will be reduced.

The discharge equation for a **submerged sharp-crested weir** is [49]:

$$Q_s = Q_r \left(1 - (H_2/H_1)^{1.5}\right)^{0.385} \qquad (8\text{-}21)$$

where:
- $Q_s$ = submerged flow, $m^3/s$ ($ft^3/s$)
- $Q_r$ = unsubmerged weir flow from equation 8-19 or 8-20, $m^3/s$ ($ft^3/s$)
- $H_1$ = upstream head above crest, m (ft)
- $H_2$ = downstream head above crest, m (ft)

Flow over the top edge of a riser pipe is typically treated as flow over a sharp crested weir with no end constrictions. Equation 8-19 should be used for this case.

***Example 8-6***

***Given:*** *A riser pipe as shown in figure 8-14 with the following characteristics:*

*diameter (D) = 0.53 m (1.75 ft)*
*crest elevation = 10.8 m (35.4 ft)*
*weir height ($H_c$) = 0.8 m (2.6 ft)*

***Find:*** *The stage - discharge rating for the riser pipe between 10 m (32.8 ft) and 12.0 m (39.4 ft).*

***Solution:*** *Since the riser pipe functions as both a weir and an orifice (depending on stage), the rating is developed by comparing the stage - discharge produced by both weir and orifice flow as follows:*

*Using equation 8-18 for orifices with D = 0.53 m (1.75 ft) yields the following relationship between the effective head on the orifice ($H_o$) and the resulting discharge:*

$$Q = K_{or} D^2 H_o^{0.50}$$
$$Q = (2.09)(0.53)^2 H_o^{0.50}$$
$$Q = 0.587 H_o^{0.50}$$

*Using equation 8-19 for sharp crested weirs with $C_{SCW}$ = 1.84 ($H/H_c$ assumed less than 0.3), and L = pipe circumference = 1.67 m (5.5 ft) yields the following relationship between the effective head on the riser (H) and the resulting discharge:*

$$Q = C_{SCW} L H^{1.5}$$
$$Q = (1.84)(1.67) H^{1.5}$$
$$Q = 3.073 H^{1.5}$$

*The resulting stage - discharge relationship is summarized in the following table:*

| STAGE | | EFFECTIVE HEAD | | ORIFICE FLOW | | WEIR FLOW | |
|---|---|---|---|---|---|---|---|
| (m) | (ft) | (m) | (ft) | ($m^3/s$) | ($ft^3/s$) | ($m^3/s$) | ($ft^3/s$) |
| 10.0 | 32.8 | 0.0 | 0.0 | 0.00 | 0.0 | 0.00 | 0.0 |
| 10.8 | 35.4 | 0.0 | 0.0 | 0.00 | 0.0 | 0.00 | 0.0 |
| 10.9 | 35.7 | 0.1 | 0.3 | 0.19 | 6.6 | 0.10 | 3.4 |
| 11.0 | 36.1 | 0.2 | 0.7 | 0.26 | 9.2 | 0.27 | 9.5 |
| 11.2 | 36.7 | 0.4 | 1.3 | 0.37 | 13.1 | 0.78 | 27.5 |
| 11.4 | 37.4 | 0.6 | 2.0 | 0.45 | 15.9 | 1.43 | 50.5 |
| 11.6 | 38.1 | 0.8 | 2.6 | 0.53 | 18.7 | 2.20 | 77.7 |
| 11.8 | 38.7 | 1.0 | 3.3 | 0.59 | 20.8 | 3.07 | 108.4 |
| 12.0 | 39.4 | 1.2 | 3.9 | 0.64 | 22.6 | 4.04 | 142.7 |

*Designates controlling flow.*

*The flow condition, orifice or weir, producing the lowest discharge for a given stage defines the controlling relationship. As illustrated in the above table, at a stage of 10.9 m (35.7 ft) weir flow controls the discharge through the riser. However, at and above a stage of 11.0 m (36.1 ft), orifice flow controls the discharge through the riser.*



Broad-Crested Weir

The equation typically used for a broad-crested weir is [49]:

$$Q = C_{BCW} L H^{1.5} \tag{8-22}$$

where:
- Q = discharge, $m^3/s$ ($ft^3/s$)
- $C_{BCW}$ = broad-crested weir coefficient, 1.44 - 1.70 (2.61 to 3.08)
- L = broad-crested weir length, m (ft)
- H = head above weir crest, m (ft)

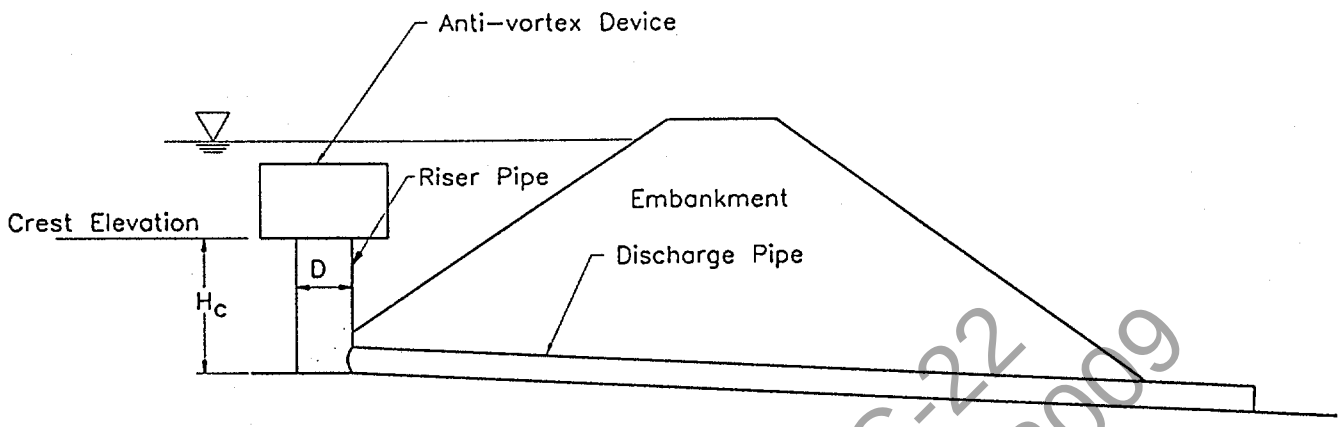


**Figure 8-14. Riser pipe.**

If the upstream edge of a broad-crested weir is so rounded as to prevent contraction and if the slope of the crest is as great as the loss of head due to friction, flow will pass through critical depth at the weir crest; this gives the maximum C value of 1.70. For sharp corners on the broad crested weir, a minimum value of 1.44 should be used. Additional information on C values as a function of weir crest breadth and head is given in table 8-1.



### V-Notch Weir

The discharge through a v-notch weir is shown in figure 8-15 and can be calculated from the following equation [49]:

$$Q = 1.38 \tan(\theta/2)\, H^{2.5} \qquad (8\text{-}23)$$

where: $Q$ = discharge, $m^3/s$ ($ft^3/s$)
$\theta$ = angle of v-notch, degrees
$H$ = head on apex of v-notch, m (ft)

### Proportional Weir

Although more complex to design and construct, a proportional weir may significantly reduce the required storage volume for a given site. The proportional weir is distinguished from other control devices by having a linear head-discharge relationship. This relationship is achieved by allowing the discharge area to vary nonlinearly with head.

**Table 8-1. Broad-crested weir coefficient C values as a function of weir crest breadth and head (coefficient has units of $m^{0.5}$/sec) [12].**

| Head[2] (m) | BREADTH OF CREST OF WEIR (m) | | | | | | | | | | | | | | |
|---|---|---|---|---|---|---|---|---|---|---|---|---|---|---|---|
| | 0.15 | 0.20 | 0.30 | 0.40 | 0.50 | 0.60 | 0.70 | 0.80 | 0.90 | 1.00 | 1.25 | 1.50 | 2.00 | 3.00 | 4.00 |
| 0.10 | 1.59 | 1.56 | 1.50 | 1.47 | 1.45 | 1.43 | 1.42 | 1.41 | 1.40 | 1.39 | 1.37 | 1.35 | 1.36 | 1.40 | 1.45 |
| 0.15 | 1.65 | 1.60 | 1.51 | 1.48 | 1.45 | 1.44 | 1.44 | 1.44 | 1.45 | 1.45 | 1.44 | 1.43 | 1.44 | 1.45 | 1.47 |
| 0.20 | 1.73 | 1.66 | 1.54 | 1.49 | 1.46 | 1.44 | 1.44 | 1.45 | 1.47 | 1.48 | 1.48 | 1.49 | 1.49 | 1.49 | 1.48 |
| 0.30 | 1.83 | 1.77 | 1.64 | 1.56 | 1.50 | 1.47 | 1.46 | 1.46 | 1.46 | 1.47 | 1.47 | 1.48 | 1.48 | 1.48 | 1.46 |
| 0.40 | 1.83 | 1.80 | 1.74 | 1.65 | 1.57 | 1.52 | 1.49 | 1.47 | 1.46 | 1.46 | 1.47 | 1.47 | 1.47 | 1.48 | 1.47 |
| 0.50 | 1.83 | 1.82 | 1.81 | 1.74 | 1.67 | 1.60 | 1.55 | 1.51 | 1.48 | 1.48 | 1.47 | 1.46 | 1.46 | 1.46 | 1.45 |
| 0.60 | 1.83 | 1.83 | 1.82 | 1.73 | 1.65 | 1.58 | 1.54 | 1.46 | 1.31 | 1.34 | 1.48 | 1.46 | 1.46 | 1.46 | 1.45 |
| 0.70 | 1.83 | 1.83 | 1.83 | 1.78 | 1.72 | 1.65 | 1.60 | 1.53 | 1.44 | 1.45 | 1.49 | 1.47 | 1.47 | 1.46 | 1.45 |
| 0.80 | 1.83 | 1.83 | 1.83 | 1.82 | 1.79 | 1.72 | 1.66 | 1.60 | 1.57 | 1.55 | 1.50 | 1.47 | 1.47 | 1.46 | 1.45 |
| 0.90 | 1.83 | 1.83 | 1.83 | 1.83 | 1.81 | 1.76 | 1.71 | 1.66 | 1.61 | 1.58 | 1.50 | 1.47 | 1.47 | 1.46 | 1.45 |
| 1.00 | 1.83 | 1.83 | 1.83 | 1.83 | 1.82 | 1.81 | 1.76 | 1.70 | 1.64 | 1.60 | 1.51 | 1.48 | 1.47 | 1.46 | 1.45 |
| 1.10 | 1.83 | 1.83 | 1.83 | 1.83 | 1.83 | 1.83 | 1.80 | 1.75 | 1.66 | 1.62 | 1.52 | 1.49 | 1.47 | 1.46 | 1.45 |
| 1.20 | 1.83 | 1.83 | 1.83 | 1.83 | 1.83 | 1.83 | 1.83 | 1.79 | 1.70 | 1.65 | 1.53 | 1.49 | 1.48 | 1.46 | 1.45 |
| 1.30 | 1.83 | 1.83 | 1.83 | 1.83 | 1.83 | 1.83 | 1.83 | 1.82 | 1.77 | 1.71 | 1.56 | 1.51 | 1.49 | 1.46 | 1.45 |
| 1.40 | 1.83 | 1.83 | 1.83 | 1.83 | 1.83 | 1.83 | 1.83 | 1.83 | 1.83 | 1.77 | 1.60 | 1.52 | 1.50 | 1.46 | 1.45 |
| 1.50 | 1.83 | 1.83 | 1.83 | 1.83 | 1.83 | 1.83 | 1.83 | 1.83 | 1.83 | 1.79 | 1.66 | 1.55 | 1.51 | 1.46 | 1.45 |
| 1.60 | 1.83 | 1.83 | 1.83 | 1.83 | 1.83 | 1.83 | 1.83 | 1.83 | 1.83 | 1.81 | 1.74 | 1.58 | 1.53 | 1.46 | 1.45 |

(1) Modified from reference 49
(2) Measured at least 2.5 $H_c$ upstream of the weir
(3) 1 m = 3.28 feet



Design equations for proportional weirs are as follows [50]:

$$Q = 2.74\, a^{0.5} b(H - a/3) \tag{8-24}$$

$$x/b = 1 - (0.315)\ [\arctan(y/a)^{0.5}] \tag{8-25}$$

where: Q = discharge, $m^3/s$ ($ft^3/s$)
H = head above horizontal sill, m (ft)
Dimensions a, b, x, and y are as shown in figure 8-16.

8.4.4.3 Discharge Pipes

Discharge pipes are often used as outlet structures for detention facilities. The design of these pipes can be for either single or multistage discharges. A single step discharge system would consist of a single culvert entrance system and would not be designed to carry emergency flows. A multistage inlet would involve the placement of a control structure at the inlet end of the pipe. The inlet structure would be designed in such a way that the design discharge would pass through a weir or orifice in the lower levels of the structure and the emergency flows would pass over the top of the structure. The pipe would need

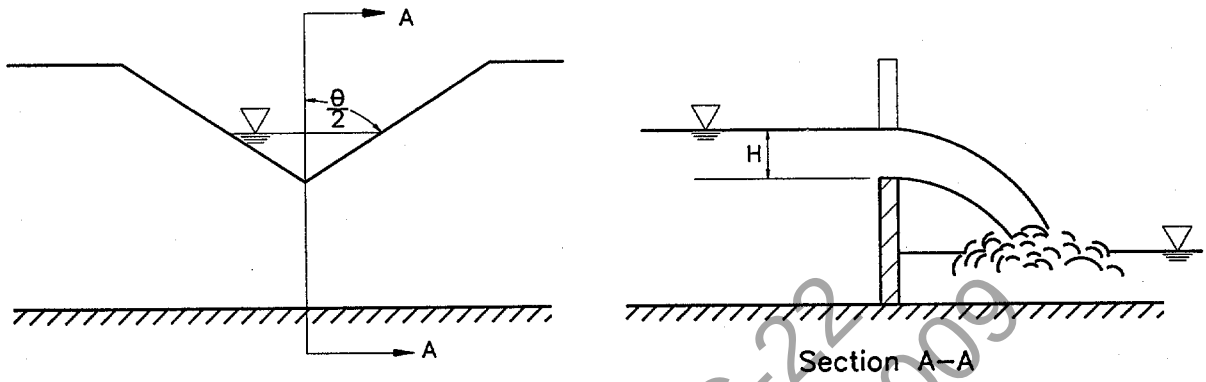


**Figure 8-15. V-notch weir.**

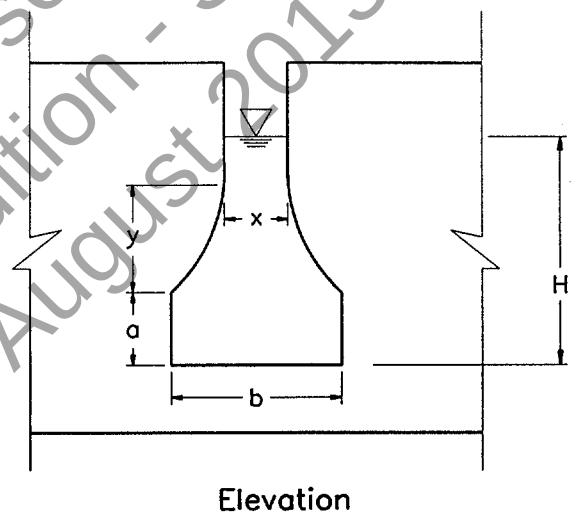


**Figure 8-16. Proportional weir dimensions.**

to be designed to carry the full range of flows from a drainage area including the emergency flows.

For single stage systems, the facility would be designed as if it were a simple culvert. Appropriate design procedures are outlined in *Hydraulic Design of Highway Culverts (HDS-5)* [2]. For multistage control structures, the inlet control structure would be designed considering both the design flow and the emergency flows. A stage-discharge curve would be developed for the full range of flows that the structure would experience. The design flows will typically be orifice flow through whatever shape the designer has chosen while the higher flows will typically be weir flow over the top of the control structure. Orifices can be designed using the equations in section 8.4.4.1 and weirs can be designed using the equations in section 8.4.4.2. The pipe must be designed to carry all flows considered in the design of the control structure.

In designing a multistage structure, the designer would first develop peak discharges that must be passed through the facility. The second step would be to select a pipe that will pass the peak flow within the allowable headwater and develop a performance curve for the pipe. Thirdly, the designer would develop a stage-discharge curve for the inlet control structure, recognizing that the headwater for the discharge pipe will be the tailwater that needs to be considered in designing the inlet structure. And lastly, the designer would use the stage-discharge curve in the basin routing procedure.



***Example 8-7***

***Given:*** *A corrugated steel discharge pipe as shown in figure 8-14 with the following characteristics:*

*maximum head on pipe = 0.75 m (2.3 ft) (conservative value of 0.05 m less than the riser height specified in example 3-8.*
*inlet invert = 10.0 m (32.8 ft)*
*length (L) = 50 m (164 ft)*
*slope = 0.04 m/m (ft/ft)*
*roughness = 0.024*
*square edge entrance ($K_e$ = 0.5)*
*discharge pipe outfall is free (not submerged)*
*Runoff characteristics as defined in Example 3-8.*

***Find:*** *The size pipe needed to carry the maximum allowable flow rate from the detention basin.*

***Solution:*** *From example 3-8, the maximum predeveloped discharge from the watershed is 0.55 $m^3/s$ (19.4 $ft^3/s$). Since the discharge pipe can function under inlet or barrel control, the pipe size will be evaluated for both conditions. The larger pipe size will be selected for the final design.*

*Using chart 2 from HDS-5 [2] yields the relationship between head on the pipe and the resulting discharge for inlet control. From the chart, the pipe diameter necessary to carry the flow is 750 mm (30 in).*

*Using chart 6 from HDS-5 [2] yields the relationship between head on the pipe and discharge for barrel control. From the chart, the pipe diameter necessary to carry the flow is 675 mm (27 in).*

*For the design, select pipe diameter = 750 mm (30 in).*

*An HY8 computer solution to this example which illustrates development of a stage-discharge relationship for the discharge pipe is presented in appendix B.*

8.4.4.4 Emergency Spillway

The purpose of an emergency spillway is to provide a controlled overflow relief for storm flows in excess of the design discharge for the storage facility. The inlet control structure discussed in section 8.4.5.3 is commonly used to release emergency flows. Another suitable emergency spillway for detention storage facilities for highway applications is a broad-crested overflow weir cut through the original ground next to the embankment. The transverse cross-section of the weir cut is typically trapezoidal in shape for ease of construction. Such an excavated emergency spillway is illustrated in figure 8-17. The invert of the spillway at the outfall should be at an elevation 0.3 m (1 ft) to 0.6 m (2 ft) above the maximum design storage elevation. It is preferable to have a freeboard of 0.6 m (2 ft) minimum. However, for very small impoundments (less than 0.4 to 0.8 hectare surface area) an absolute minimum of 0.3 meter of freeboard may be acceptable [40].

Equation 8-26 presents a relationship for computing the flow through a broad-crested emergency spillway. The dimensional terms in the equation are illustrated in figure 8-17.

$$Q = C_{SP}\, b\, H_p^{1.5} \tag{8-26}$$

where:
- $Q$ = emergency spillway discharge, $m^3/s$ ($ft^3/s$)
- $C_{SP}$ = discharge coefficient
- $b$ = width of the emergency spillway, m (ft)
- $H_p$ = effective head on the emergency spillway, m (ft)

The discharge coefficient, $C_{SP}$, in equation 8-26 varies as a function of spillway bottom width and effective head. Figure 8-18 illustrates this relationship. Table 8-2, modified from reference 51, provides a tabulation of emergency spillway design parameters.

The critical slopes of table 8-2 are based upon an assumed n = 0.040 for turf cover of the spillway. For a paved spillway, the n should be assumed as 0.015. Equations 8-27 and 8-28 can be used to compute the critical velocity and slope for spillway materials having other roughness values.

$$V_c = K_{SP} \left(\frac{Q}{b}\right)^{0.33} \tag{8-27}$$

where:
- $V_c$ = critical velocity at emergency spillway control section, m/s (ft/s)
- $Q$ = emergency spillway discharge, $m^3/s$ ($ft^3/s$)
- $b$ = width of the emergency spillway, m (ft)
- $K_{SP}$ = 2.14 (3.18 in english units)

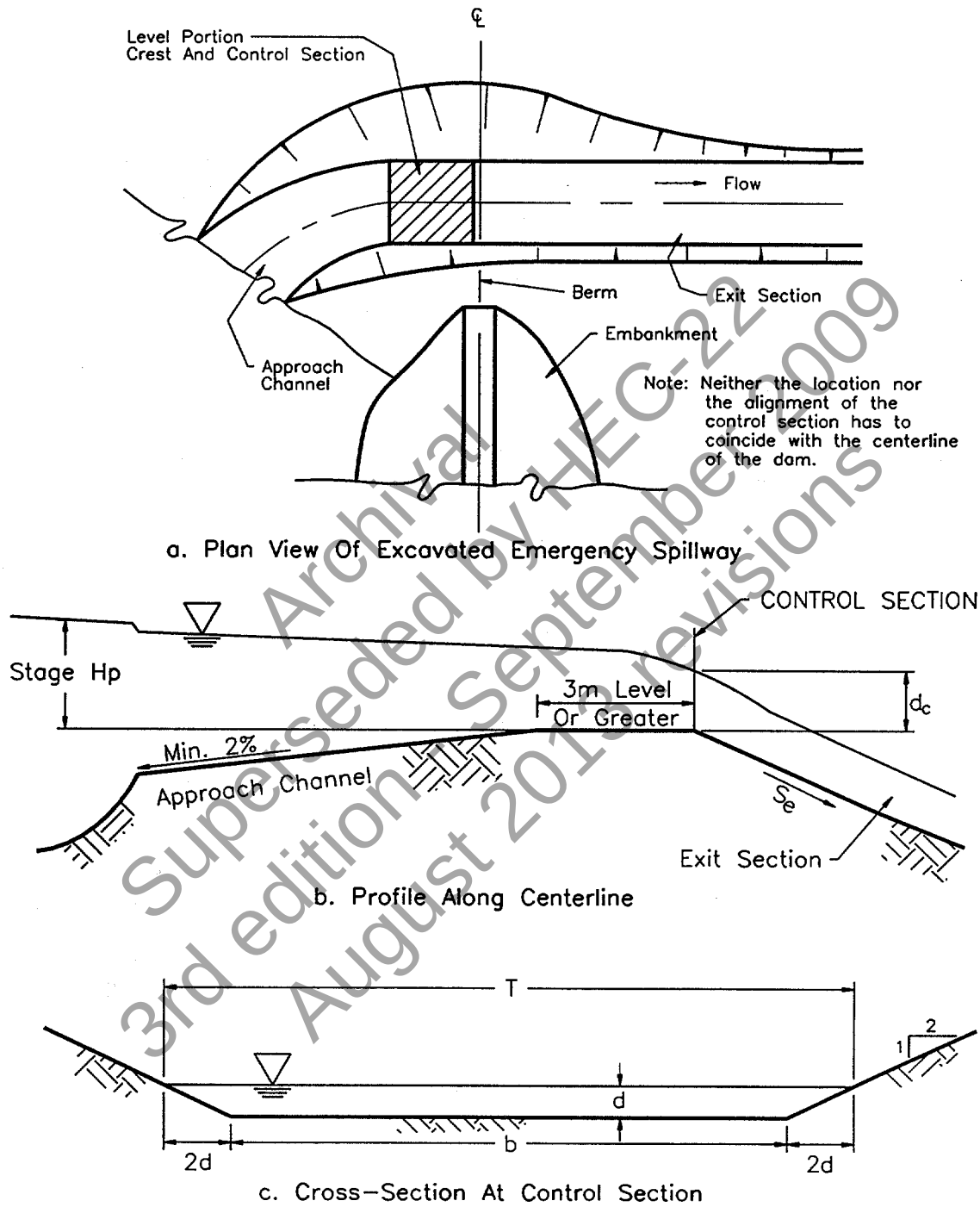




**Figure 8-17. Emergency spillway design schematic.**

**Table 8-2. Emergency spillway design parameters (metric units)**

| $H_p$ (m) | | Spillway Bottom Width, b, meters | | | | | | | | | | | | | | |
|---|---|---|---|---|---|---|---|---|---|---|---|---|---|---|---|---|
| | | 2.0 | 2.5 | 3.0 | 3.5 | 4.0 | 4.5 | 5.0 | 5.5 | 6.0 | 6.5 | 7.0 | 7.5 | 8.0 | 8.5 | 9.0 |
| | Q | 0.19 | 0.26 | 0.35 | 0.40 | 0.44 | 0.50 | 0.58 | 0.65 | 0.69 | 0.73 | - | - | - | - | - |
| 0.20 | $V_c$ | 0.98 | 1.02 | 1.06 | 1.05 | 1.03 | 1.04 | 1.05 | 1.06 | 1.05 | 1.04 | - | - | - | - | - |
| | $S_c$ | 3.4% | 3.3% | 3.2% | 3.2% | 3.3% | 3.3% | 3.2% | 3.2% | 3.2% | 3.2% | - | - | - | - | - |
| | Q | 0.34 | 0.43 | 0.52 | 0.60 | 0.67 | 0.75 | 0.85 | 0.94 | 1.02 | 1.09 | - | - | - | - | - |
| 0.25 | $V_c$ | 1.19 | 1.20 | 1.20 | 1.19 | 1.19 | 1.19 | 1.19 | 1.20 | 1.19 | 1.19 | - | - | - | - | - |
| | $S_c$ | 3.0% | 3.0% | 3.0% | 3.0% | 3.0% | 3.0% | 3.0% | 3.0% | 3.0% | 3.0% | - | - | - | - | - |
| | Q | 0.53 | 0.63 | 0.72 | 0.83 | 0.95 | 1.06 | 1.18 | 1.29 | 1.41 | 1.52 | 1.64 | 1.75 | 1.87 | 1.96 | 2.07 |
| 0.30 | $V_c$ | 1.38 | 1.36 | 1.34 | 1.33 | 1.33 | 1.33 | 1.33 | 1.33 | 1.33 | 1.33 | 1.33 | 1.32 | 1.32 | 1.32 | 1.32 |
| | $S_c$ | 2.7% | 2.7% | 2.8% | 2.8% | 2.8% | 2.8% | 2.8% | 2.8% | 2.8% | 2.8% | 2.8% | 2.8% | 2.8% | 2.8% | 2.8% |
| | Q | 0.68 | 0.82 | 0.95 | 1.10 | 1.24 | 1.37 | 1.51 | 1.66 | 1.81 | 1.94 | 2.08 | 2.21 | 2.34 | 2.49 | 2.62 |
| 0.35 | $V_c$ | 1.50 | 1.48 | 1.46 | 1.46 | 1.45 | 1.45 | 1.44 | 1.44 | 1.44 | 1.44 | 1.43 | 1.43 | 1.43 | 1.43 | 1.42 |
| | $S_c$ | 2.5% | 2.6% | 2.6% | 2.6% | 2.6% | 2.6% | 2.6% | 2.6% | 2.6% | 2.6% | 2.6% | 2.6% | 2.6% | 2.6% | 2.6% |
| | Q | 0.86 | 1.04 | 1.20 | 1.38 | 1.55 | 1.72 | 1.89 | 2.07 | 2.25 | 2.42 | 2.58 | 2.74 | 2.90 | 3.09 | 3.27 |
| 0.40 | $V_c$ | 1.62 | 1.60 | 1.58 | 1.57 | 1.57 | 1.56 | 1.55 | 1.55 | 1.55 | 1.55 | 1.54 | 1.53 | 1.53 | 1.53 | 1.53 |
| | $S_c$ | 2.4% | 2.4% | 2.5% | 2.5% | 2.5% | 2.5% | 2.5% | 2.5% | 2.5% | 2.5% | 2.5% | 2.5% | 2.5% | 2.5% | 2.5% |
| | Q | 1.05 | 1.27 | 1.48 | 1.69 | 1.90 | 2.11 | 2.32 | 2.53 | 2.74 | 2.95 | 3.15 | 3.35 | 3.56 | 3.78 | 4.00 |
| 0.45 | $V_c$ | 1.73 | 1.71 | 1.70 | 1.68 | 1.67 | 1.67 | 1.66 | 1.66 | 1.65 | 1.65 | 1.64 | 1.64 | 1.64 | 1.64 | 1.64 |
| | $S_c$ | 2.3% | 2.3% | 2.4% | 2.4% | 2.4% | 2.4% | 2.4% | 2.4% | 2.4% | 2.4% | 2.4% | 2.4% | 2.4% | 2.4% | 2.4% |
| | Q | 1.27 | 1.55 | 1.81 | 2.05 | 2.30 | 2.54 | 2.79 | 3.05 | 3.30 | 3.54 | 3.79 | 4.05 | 4.31 | 4.55 | 4.79 |
| 0.50 | $V_c$ | 1.84 | 1.83 | 1.81 | 1.79 | 1.78 | 1.77 | 1.77 | 1.76 | 1.75 | 1.75 | 1.75 | 1.75 | 1.74 | 1.74 | 1.74 |
| | $S_c$ | 2.2% | 2.2% | 2.3% | 2.3% | 2.3% | 2.3% | 2.3% | 2.3% | 2.3% | 2.3% | 2.3% | 2.3% | 2.3% | 2.3% | 2.3% |
| | Q | 1.54 | 1.85 | 2.13 | 2.43 | 2.73 | 3.03 | 3.33 | 3.60 | 3.91 | 4.19 | 4.47 | 4.75 | 5.02 | 5.30 | 5.58 |
| 0.55 | $V_c$ | 1.96 | 1.94 | 1.91 | 1.90 | 1.89 | 1.88 | 1.87 | 1.86 | 1.86 | 1.85 | 1.85 | 1.84 | 1.84 | 1.83 | 1.83 |
| | $S_c$ | 2.1% | 2.2% | 2.2% | 2.2% | 2.2% | 2.2% | 2.2% | 2.2% | 2.2% | 2.2% | 2.2% | 2.2% | 2.2% | 2.2% | 2.2% |
| | Q | 1.84 | 2.18 | 2.48 | 2.81 | 3.17 | 3.52 | 3.86 | 4.19 | 4.53 | 4.85 | 5.18 | 5.52 | 5.85 | 6.17 | 6.50 |
| 0.60 | $V_c$ | 2.08 | 2.05 | 2.01 | 1.99 | 1.98 | 1.97 | 1.96 | 1.96 | 1.95 | 1.94 | 1.94 | 1.93 | 1.93 | 1.93 | 1.92 |
| | $S_c$ | 2.1% | 2.1% | 2.1% | 2.1% | 2.1% | 2.1% | 2.1% | 2.1% | 2.1% | 2.2% | 2.2% | 2.2% | 2.2% | 2.2% | 2.2% |

NOTE:

1. For a given $H_p$, decreasing exit slope from $S_c$ decreases spillway discharge, but increasing exit slope from $S_c$ does not increase discharge.

2. If a slope $S_e$ steeper than $S_c$ is used, velocity $V_c$ in the exit channel will increase according to the following relationship:

$$V_e = V_c \, (S_e/S_c)^{0.3}$$

3. One meter is 3.28 feet; one cubic meter is 35.28 cubic feet

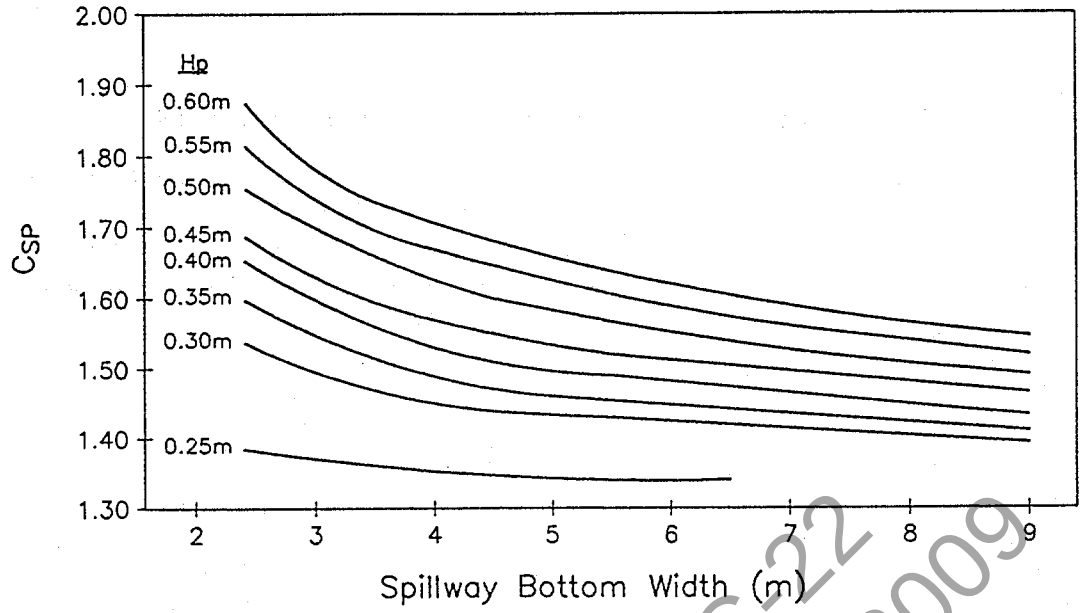


**Figure 8-18. Discharge coefficients for emergency spillways.**

$$S_c = K'_{SP}\, n^2 \left(\frac{V_c\, b}{Q}\right)^{0.33} \tag{8-28}$$

where:
- $S_c$ = critical slope, m/m (ft/ft)
- $n$ = Manning's coefficient
- $V_c$ = critical velocity at emergency spillway control section, m/s (ft/s)
- $Q$ = emergency spillway discharge, $m^3/s$ ($ft^3/s$)
- $b$ = width of the emergency spillway, m (ft)
- $K_{SP}'$ = 9.84 (14.6 in english units)

*Example 8-8*

***Given:*** *An emergency spillway with the following characteristics:*

*invert elev.* = *11.6 m (38.0 ft)*
*width (b)* = *5 m (16.4 ft)*
*discharge coeff. ($C_{SP}$)* = *variable (see figure 8-18)*

***Find:*** *The stage - discharge rating for the spillway up to an elevation of 12.0 m (39.4 ft).*

***Solution:*** *Using equation 8-26 with the given parameters yields:*

$$Q = C_{SP}\, b\, Hp^{1.5}$$
$$Q = C_{SP}\, (5) Hp^{1.5}$$

*The following table provides the stage-discharge tabulation:*

| STAGE | | EFFECTIVE HEAD ON SPILLWAY | | SPILLWAY DISCHARGE | |
|---|---|---|---|---|---|
| (m) | (ft) | (m) | (ft) | ($m^3/s$) | ($ft^3/s$) |
| 11.6 | 38.0 | 0.00 | 0.00 | 0.00 | 0.0 |
| 11.7 | 38.4 | 0.10 | 0.33 | 0.24 | 8.5 |
| 11.8 | 38.7 | 0.20 | 0.66 | 0.58 | 20.5 |
| 11.9 | 39.0 | 0.30 | 0.98 | 1.18 | 41.6 |
| 12.0 | 39.4 | 0.40 | 1.31 | 1.89 | 66.7 |

8.4.4.5 Infiltration

Analysis of discharges from retention facilities requires knowledge of soil permeabilities and hydrogeologic conditions in the vicinity of the basin. Although infiltration rates are published in many county soils reports, it is advised that good field measurements be made to provide better estimates for these parameters. This is particularly important in karst areas where the hydrogeologic phenomenon controlling infiltration rates may be complex.

Discharges controlled by infiltration processes are typically several orders of magnitude smaller than design inflow rates. If a retention facility includes an emergency overflow structure, it is often reasonable to ignore infiltration as a component of the discharge performance curve for the structure. However, if the retention facility is land-locked and has no outlet, it may be important to evaluate infiltration rates as they relate to the overall storage volume required (see section 8.7 for discussion of land-locked storage).

8.4.4.6 Composite Stage Discharge Curves

As indicated by the discussions in the preceding sections, development of a stage - discharge curve for a particular outlet control structure will depend on the interaction of the individual ratings for each component of the control structure. Figure 8-19 illustrates the construction of a stage - discharge curve for an outlet control device consisting of a low flow orifice and a riser pipe connected to an outflow pipe. The structure also includes an emergency spillway. These individual components are as described in examples 8-5, 8-6, and 8-8.

The impact of each element in the control structure can be seen in figure 8-19. Initially, the low flow orifice controls the discharge. At an elevation of 10.8 m (35.4 ft) the water surface in the storage facility reaches the top of the riser pipe and begins to flow into the riser. The flow at this point is a combination of the flows through the

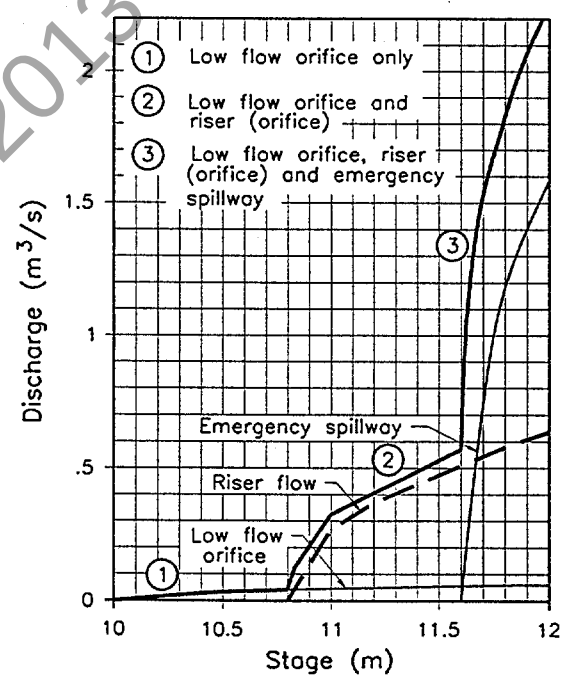


**Figure 8-19. Typical combined stage-discharge relationship.**

orifice and the riser. As indicated in example 8-6, orifice flow through the riser controls the riser discharge above a stage of 11.0 m (36.1 ft). At an elevation of 11.6 meters (38.0 ft), flow begins to pass over the emergency spillway. Beyond this point, the total discharge from the facility is a summation of the flows through the low flow orifice, the riser pipe, and the emergency spillway. The data used to construct the curves in figure 8-19 are tabulated in table 8-3. Additionally, the designer needs to ensure that the outlet pipe from the detention basin is large enough to carry the total flows from the low orifice and the riser section. This ensures that the outlet pipe is not controlling the flow from the basin.

## 8.5 GENERALIZED ROUTING PROCEDURE

The most commonly used method for routing inflow hydrograph through a detention pond is the Storage Indication or modified Puls method. This method begins with the continuity equation which states that the inflow minus the outflow equals the change in storage ($I - 0 = \Delta S$). By taking the average of two closely spaced inflows and two closely spaced outflows, the method is expressed by equation 8-29. This relationship is illustrated graphically in figure 8-20.

$$\frac{\Delta S}{\Delta t} = \frac{I_1 + I_2}{2} - \frac{O_1 + O_2}{2} \qquad (8\text{-}29)$$

where: $\Delta S$ = change in storage, $m^3$ ($ft^3$)
$\Delta t$ = time interval, min
$I$ = inflow, $m^3$ ($ft^3$)
$O$ = outflow, $m^3$ ($ft^3$)

In equation 8-29, subscript 1 refers to the beginning and subscript 2 refers to the end of the time interval.

Equation 8-29 can be rearranged so that all the known values are on the left side of the equation and all the unknown values are located on the right hand side of the equation, as shown in equation 8-30. Now, the equation with two unknowns, $S_2$ and $O_2$, can be solved with one equation. The following

**Table 8-3. Stage - discharge tabulation.**

| STAGE | | LOW FLOW ORIFICE | RISER ORIFICE FLOW | EMERGENCY SPILLWAY | TOTAL DISCHARGE | |
|---|---|---|---|---|---|---|
| (m) | (ft) | ($m^3/s$) | ($m^3/s$) | ($m^3/s$) | ($m^3/s$) | ($ft^3/s$) |
| 10.0 | 32.8 | 0.000 | 0.00 | 0.00 | 0.00 | 0.0 |
| 10.2 | 33.5 | 0.011 | 0.00 | 0.00 | 0.01 | 0.4 |
| 10.4 | 34.1 | 0.024 | 0.00 | 0.00 | 0.02 | 0.8 |
| 10.6 | 34.8 | 0.032 | 0.00 | 0.00 | 0.03 | 1.1 |
| 10.8 | 35.4 | 0.038 | 0.00 | 0.00 | 0.04 | 1.3 |
| 11.0 | 36.1 | 0.043 | 0.26 | 0.00 | 0.31 | 10.7 |
| 11.2 | 36.7 | 0.048 | 0.37 | 0.00 | 0.42 | 14.8 |
| 11.4 | 37.4 | 0.053 | 0.45 | 0.00 | 0.50 | 17.7 |
| 11.6 | 38.1 | 0.057 | 0.53 | 0.00 | 0.59 | 20.7 |
| 11.8 | 38.7 | 0.061 | 0.59 | 1.12 | 1.77 | 62.5 |
| 12 | 39.4 | 0.064 | 0.64 | 1.58 | 2.28 | 80.6 |

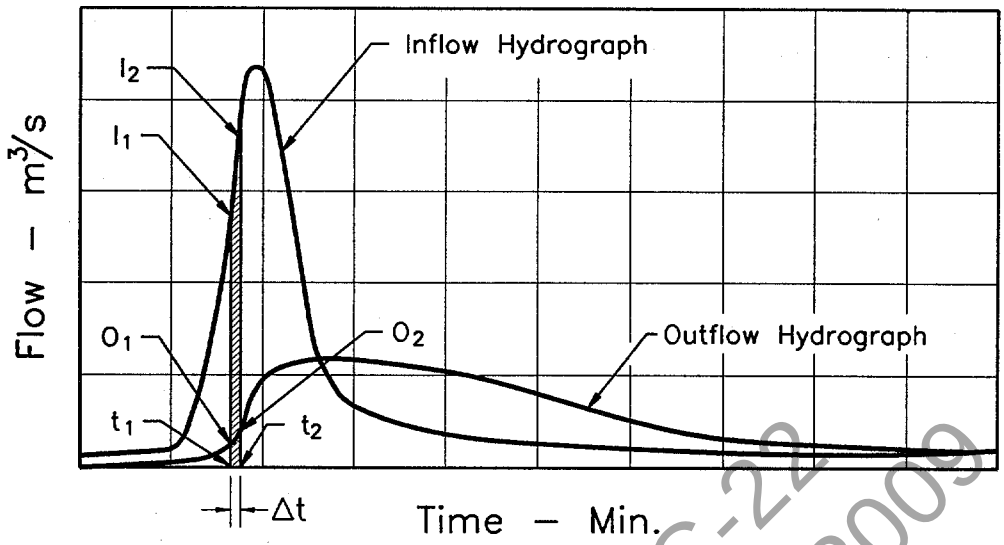


**Figure 8-20. Routing hydrograph schematic.**

procedure can be used to perform routing through a reservoir or storage facility using equation 8-30.

$$\frac{I_1 + I_2}{2} + \left(\frac{S_1}{\Delta t} + \frac{O_1}{2}\right) - O_1 = \left(\frac{S_2}{\Delta t} + \frac{O_2}{2}\right) \tag{8-30}$$

Step 1. Develop an inflow hydrograph, stage-discharge curve, and stage-storage curve for the proposed storage facility.

Step 2. Select a routing time period, Δt, to provide a minimum of five points on the rising limb of the inflow hydrograph.

Step 3. Use the stage-storage and stage-discharge data from Step 1 to develop a storage indicator numbers table that provides storage indicator values, S/(Δt) + O/2, versus stage. A typical storage indicator numbers table contains the following column headings:

| (1) Stage (m) | (2) Discharge (O) ($m^3/s$) | (3) Storage (S) ($m^3$) | (4) $O_2/2$ ($m^3/s$) | (5) $S_2/\Delta t$ ($m^3/s$) | (6) $S_2/\Delta t + O_2/2$ |
|---|---|---|---|---|---|

a. The discharge (O) and storage (S) are obtained from the stage-discharge and stage-storage curves, respectively.

b. The subscript 2 is arbitrarily assigned at this time.

c. The time interval (Δt) must be the same as the time interval used in the tabulated inflow hydrograph.

Step 4. Develop a storage indicator numbers curve by plotting the outflow (column 2) vertically against the storage indicator numbers in column (6). An equal value line plotted as $O_2 = S_2/\Delta t + 0_2/2$ should also be plotted. If the storage indicator curve crosses the equal value line, a smaller time increment ($\Delta t$) is needed (refer to figure 8-21).

Step 5. A supplementary curve of storage (column 3) vs. $S_2/\Delta t + O_2/2$ (column 4) can also be constructed. This curve does not enter into the mainstream of the routing; however, it is useful for identifying storage for any given value of $S_2/\Delta t + O_2/2$. A plot of storage vs. time can be developed from this curve.

Step 6. The routing can now be performed by developing a routing table for the solution of equation 8-30 as follows:

a. Columns (1) and (2) are obtained from the inflow hydrograph.

b. Column (3) is the average inflow over the time interval.

c. The initial values for columns (4) and (5) are generally assumed to be zero since there is no storage or discharge at the beginning of the hydrograph when there is no inflow into the basin.

d. The left side of equation 8-30 is determined algebraically as columns (3) + (4) - (5). This value equals the right side of equation 8-30 or $S_2/\Delta t + 0_2/2$ and is placed in column (6).

e. Enter the storage indicator curve with $S_2/\Delta t + O_2/2$ (column 6) to obtain $O_2$ (column 7).

f. Column (6) ($S_2/\Delta t + O_2/2$) and column (7) ($O_2$) are transported to the next line and become $S_1/\Delta t + O_1/2$ and $O_1$ in columns (4) and (5), respectively. Because ($S_2/\Delta t + O_2/2$) and $O_2$ are the ending values for the first time step, they can also be said to be the beginning values for the second time step.

g. Columns (3), (4), and (5) are again combined and the process is continued until the storm is routed.

h. Peak storage depth and discharge ($O_2$ in column (7)) will occur when column (6) reaches a maximum. The storage indicator numbers table developed in Step 3 is entered with the maximum value of $S_2/\Delta t + O_2/2$ to obtain the maximum amount of storage required. This table can also be used to determine the corresponding elevation of the depth of stored water.

i. The designer needs to make sure that the peak value in column (7) does not exceed the allowable discharge as prescribed by the stormwater management criteria.

Step. 7. Plot $O_2$ (column (7)) versus time (column (1)) to obtain the outflow hydrograph.

The above procedure is illustrated in the following example.

***Example 8-9***

**Given:** *The inflow hydrograph from example 3-8, the storage basin from example 8-2, and a discharge control structure comprised of the components in examples 8-5 through 8-8 having a composite stage-discharge relationship defined in table 8-3.*

**Find:** *The outflow hydrograph.*

**Solution:** *Use the generalized routing procedure outlined above.*

*Step 1.* *The inflow hydrograph developed in example 3-8 is tabulated in the final routing table to follow and illustrated in figure 8-22. The stage-storage curve for the basin in example 8-2 is illustrated in figure 8-6. The composite stage-discharge curve tabulated in table 8-3 is illustrated in figure 8-19.*

*Step 2.* *A routing time interval of 0.057 hrs is selected to match the interval used in the inflow hydrograph. This interval provides 9 points on the rising limb of the hydrograph.*

*Step 3.* *Using the given stage-storage and stage-discharge curve data, and a time step of 0.057 hr, storage indicator numbers table can be developed as illustrated in the table below.*

*Step 4.* *A storage indicator curve is constructed by plotting the outflow (column 2 from the table below) against the storage indicator numbers (column 6). This curve is illustrated in figure 8-21. Note that an equal value line is also plotted in figure 8-21, and since the storage indicator numbers curve does not cross the equal value line, the time step selected is adequate.*

*Step 5.* *(The supplementary curve of storage (column 3) vs. the storage indicator numbers (column 6) is not required for this example.)*

*Step 6.* *The final routing is shown in the final routing table below and is developed using the procedures outlined in section 8.6.*

*Step 7.* *The inflow and outflow hydrographs are plotted in figure 8-22.*

*As indicated in the final routing table on page 8-38, the peak routed outflow is 0.52 $m^3/s$ (18.4 $ft^3/s$). This peak outflow is less than the maximum allowable value of 0.55 $m^3/s$ (19.4 $ft^3/s$) established in example 3-8. Using the table below, it can be determined that the outflow of 0.52 $m^3/s$ (18.4 $ft^3/s$) corresponds to an approximate basin stage of 11.46 m (37.6 ft) which is less than the maximum available stage of 11.6 m (38.1 ft) established in example 8-2, and a storage volume of 794 $m^3$ (28,020 $ft^3$) which is less than the estimated storage requirement of 850 $m^3$ (30,000 $ft^3$) estimated in example 8-2. At the peak stage of 11.46 m (37.6 ft), the water is not flowing over the emergency spillway. Only the riser pipe and the low flow orifice are functioning.*

***Storage Indicator Numbers Table***

| (1) Stage (m) | (2) Discharge ($O_2$) ($m^3/s$) | (3) Storage ($S_2$) ($m^3$) | (4) $O_2/2$ ($m^3/s$) | (5) $S_2/\Delta t$ ($m^3/s$) | (6) $S_2/t + O_2/2$ ($m^3/s$) |
|---|---|---|---|---|---|
| 10.0 | 0.000 | 0 | 0.000 | 0.000 | 0.000 |
| 10.1 | 0.006 | 35 | 0.003 | 0.171 | 0.174 |
| 10.2 | 0.011 | 72 | 0.006 | 0.351 | 0.357 |
| 10.3 | 0.018 | 109 | 0.009 | 0.531 | 0.540 |
| 10.4 | 0.024 | 155 | 0.012 | 0.755 | 0.767 |
| 10.5 | 0.028 | 199 | 0.014 | 0.970 | 0.984 |
| 10.6 | 0.032 | 248 | 0.016 | 1.209 | 1.225 |
| 10.7 | 0.035 | 299 | 0.018 | 1.457 | 1.475 |
| 10.8 | 0.038 | 353 | 0.019 | 1.720 | 1.739 |
| 10.9 | 0.171 | 414 | 0.086 | 2.018 | 2.104 |
| 11.0 | 0.303 | 470 | 0.152 | 2.290 | 2.442 |
| 11.1 | 0.378 | 540 | 0.189 | 2.632 | 2.821 |
| 11.2 | 0.418 | 600 | 0.209 | 2.924 | 3.133 |
| 11.3 | 0.464 | 672 | 0.235 | 3.275 | 3.510 |
| 11.4 | 0.503 | 744 | 0.252 | 3.626 | 3.878 |
| 11.5 | 0.530 | 824 | 0.265 | 4.016 | 4.281 |
| 11.6 | 0.587 | 902 | 0.294 | 4.396 | 4.690 |
| 11.7 | 1.150 | 986 | 0.575 | 4.805 | 5.380 |
| 11.8 | 1.771 | 1075 | 0.886 | 5.239 | 6.125 |
| 11.9 | 2.069 | 1160 | 1.035 | 5.653 | 6.688 |
| 12.0 | 2.284 | 1264 | 1.142 | 6.160 | 7.302 |



*As a last check, it must be determined that the discharge pipe will carry the peak discharge at a head equal to or less than the final stage in the basin. At the peak discharge determined above, the head on the discharge pipe is 1.46 m (4.8 ft). In example 8-7, it was determined that a 750 mm (30 in) discharge pipe would carry a discharge greater than 0.55 $m^3/s$ (19.4 $ft^3/s$) at a stage of 0.75 m (2.51 ft). Therefore, the discharge pipe capacity is adequate, and the pipe will not control the flow of water from the basin.*

**Final Routing Table.**

| (1) Time (hr) | (2) Inflow ($m^3/s$) | (3) $(I_1+I_2)/2$ ($m^3/s$) | (4) $(S_1/t+O_1/2)$ ($m^3/s$) | (5) $O_1$ ($m^3/s$) | (6) $(S_2/t+O_2/2)$ ($m^3/s$) | (7) $O_2$ ($m^3/s$) | (8) $O_2$ ($ft^3/s$) |
|---|---|---|---|---|---|---|---|
| 0.00 | 0.00 | 0.00 | 0.00 | 0.00 | 0.00 | 0.00 | 0.0 |
| 0.06 | 0.04 | 0.02 | 0.00 | 0.00 | 0.02 | 0.00 | 0.0 |
| 0.11 | 0.07 | 0.06 | 0.02 | 0.00 | 0.08 | 0.00 | 0.0 |
| 0.17 | 0.12 | 0.10 | 0.08 | 0.00 | 0.17 | 0.01 | 0.4 |
| 0.23 | 0.18 | 0.15 | 0.17 | 0.01 | 0.31 | 0.01 | 0.4 |
| 0.29 | 0.33 | 0.26 | 0.31 | 0.01 | 0.56 | 0.02 | 0.7 |
| 0.34 | 0.49 | 0.41 | 0.56 | 0.02 | 0.95 | 0.03 | 1.1 |
| 0.40 | 0.67 | 0.58 | 0.95 | 0.03 | 1.50 | 0.04 | 1.4 |
| 0.46 | 0.81 | 0.74 | 1.50 | 0.04 | 2.20 | 0.21 | 7.4 |
| 0.51 | 0.88 | 0.85 | 2.20 | 0.21 | 2.83 | 0.38 | 13.4 |
| 0.57 | 0.86 | 0.87 | 2.83 | 0.38 | 3.32 | 0.45 | 15.9 |
| 0.63 | 0.79 | 0.83 | 3.32 | 0.45 | 3.70 | 0.49 | 17.3 |
| 0.68 | 0.69 | 0.74 | 3.70 | 0.49 | 3.95 | 0.51 | 18.0 |
| 0.74 | 0.57 | 0.63 | 3.95 | 0.51 | 4.07 | 0.52 | 18.3 |
| 0.80 | 0.48 | 0.53 | 4.07 | 0.52 | 4.07 | 0.52 | 18.3 |
| 0.86 | 0.39 | 0.44 | 4.07 | 0.52 | 3.99 | 0.51 | 18.0 |
| 0.91 | 0.32 | 0.36 | 3.99 | 0.51 | 3.83 | 0.50 | 17.6 |
| 0.97 | 0.26 | 0.29 | 3.83 | 0.50 | 3.62 | 0.48 | 16.9 |
| 1.03 | 0.22 | 0.24 | 3.62 | 0.48 | 3.38 | 0.45 | 15.9 |
| 1.08 | 0.18 | 0.20 | 3.38 | 0.45 | 3.13 | 0.42 | 14.8 |
| 1.14 | 0.15 | 0.17 | 3.13 | 0.42 | 2.88 | 0.39 | 13.8 |
| 1.20 | 0.11 | 0.13 | 2.88 | 0.39 | 2.62 | 0.34 | 12.0 |
| 1.25 | 0.09 | 0.10 | 2.62 | 0.34 | 2.38 | 0.28 | 9.9 |
| 1.31 | 0.05 | 0.07 | 2.38 | 0.28 | 2.17 | 0.20 | 7.1 |
| 1.37 | 0.03 | 0.04 | 2.17 | 0.20 | 2.01 | 0.14 | 4.9 |
| 1.43 | 0.00 | 0.02 | 2.01 | 0.14 | 1.88 | 0.07 | 2.5 |
| 1.48 | 0.00 | 0.00 | 1.88 | 0.07 | 1.81 | 0.06 | 2.1 |
| 1.54 | 0.00 | 0.00 | 1.81 | 0.06 | 1.75 | 0.05 | 1.8 |
| 1.60 | 0.00 | 0.00 | 1.75 | 0.05 | 1.70 | 0.04 | 1.4 |
| 1.65 | 0.00 | 0.00 | 1.70 | 0.04 | 1.66 | 0.04 | 1.4 |
| 1.71 | 0.00 | 0.00 | 1.66 | 0.04 | 1.62 | 0.04 | 1.4 |
| 1.77 | 0.00 | 0.00 | 1.62 | 0.04 | 1.58 | 0.04 | 1.4 |
| 1.82 | 0.00 | 0.00 | 1.58 | 0.04 | 1.54 | 0.04 | 1.4 |
| 1.88 | 0.00 | 0.00 | 1.54 | 0.04 | 1.50 | 0.04 | 1.4 |
| 1.94 | 0.00 | 0.00 | 1.50 | 0.04 | 1.46 | 0.03 | 1.1 |
| 1.99 | 0.00 | 0.00 | 1.46 | 0.03 | 1.43 | 0.03 | 1.1 |
| 2.05 | 0.00 | 0.00 | 1.43 | 0.03 | 1.40 | 0.03 | 1.1 |
| 2.11 | 0.00 | 0.00 | 1.40 | 0.03 | 1.37 | 0.03 | 1.1 |
| 2.17 | 0.00 | 0.00 | 1.37 | 0.03 | 1.34 | 0.03 | 1.1 |

*A computer solution to the routing procedure is presented in appendix B.*

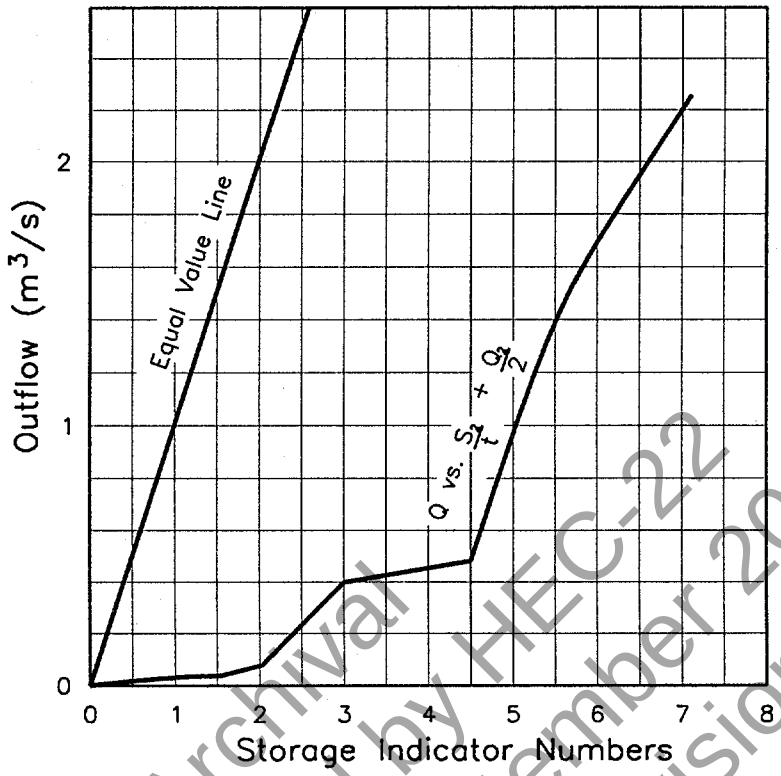


**Figure 8-21. Storage indicator curve.**

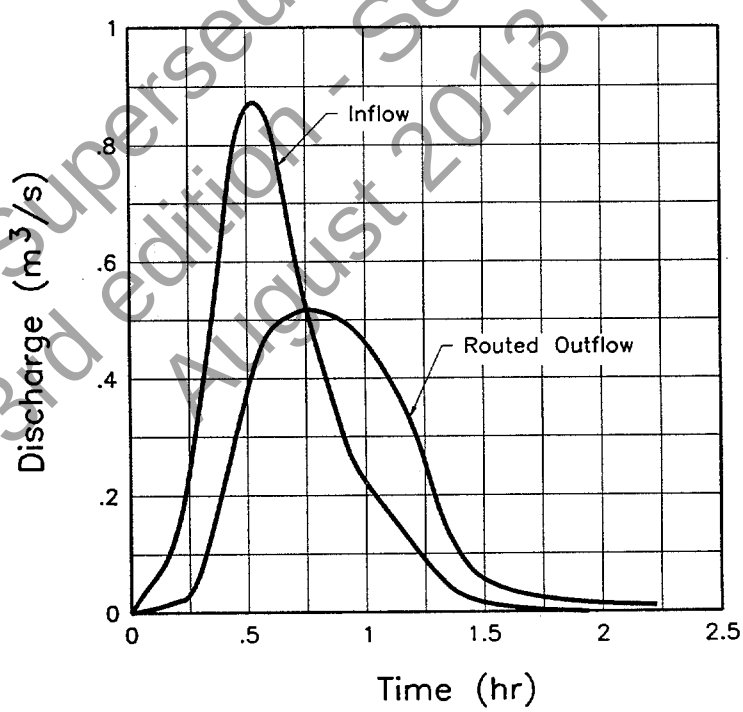


**Figure 8-22. Example 8-9 hydrographs.**

## 8.6 WATER BUDGET

Water budget calculations should be made for all permanent pool facilities and should consider performance for average annual conditions. The water budget should consider all significant inflows and outflows including, but not limited to, rainfall, runoff, infiltration, exfiltration, evaporation, and outflow.

Average annual runoff may be computed using a weighted runoff coefficient for the tributary drainage area multiplied by the average annual rainfall volume. Infiltration and exfiltration should be based on site-specific soils testing data. Evaporation may be approximated using the mean monthly pan evaporation or free water surface evaporation data for the area of interest.

***Example 8-10***

***Given:*** *A shallow basin with the following characteristics:*

- *average surface area = 1.21 ha (3 acres)*
- *bottom area = 0.81 ha (2 acres)*
- *watershed area = 40.5 ha (100 acres)*
- *post-development runoff coefficient = 0.3*
- *average infiltration rate for soils = 2.5 mm per hr (0.1 in per hr)*
- *from rainfall records, the average annual rainfall is about 127 cm (50 in)*
- *the mean annual evaporation is 89 cm (35 in).*

***Find:*** *For average annual conditions determine if the facility will function as a retention facility with a permanent pool.*

***Solution:***

- *The compute average annual runoff as:*

  $Runoff = C\ Q_D\ A$ *(modification of equation 3-1)*
  $Runoff = (0.3)(1.27\ m)(40.5\ ha)(10{,}000\ m^2 / 1\ ha) = 154{,}305\ m^3$

- *The average annual evaporation is estimated to be:*

  $Evaporation = (Evap.\ depth)(watershed\ area) = (0.89\ m)\ (1.21\ ha) = 10{,}769\ m^3$

- *The average annual infiltration is estimated as:*

  $Infiltration = (Infil.\ rate)(time)(bottom\ area)$
  $Infiltration = (2.5\ mm/hr)\ (24\ hrs/day)\ (365\ days/yr)\ (0.81\ ha)$
  $Infiltration = 177{,}390\ m^3$

- *Neglecting basin outflow and assuming no change in storage, the runoff (or inflow) less evaporation and infiltration losses is:*

  $Net\ Budget = 154{,}305 - 10{,}769 - 177{,}390 = -33{,}854\ m^3$

*Since the average annual losses exceed the average annual rainfall, the proposed facility will not function as a retention facility with a permanent pool. If the facility needs to function with a permanent pool, this can be accomplished by reducing the pool size as shown below.*

- *Revise the pool surface area to be = 0.82 ha and bottom area = 0.40 ha*

- *Recompute the evaporation and infiltration*

  *Evaporation = (0.89 m) (0.81 ha) = 7,210 $m^3$*
  *Infiltration = (2.5) (24) (365) (0.4) = 87,600 $m^3$*

- *Revised runoff less evaporation and infiltration losses is:*

  *Net Budget = 154,305 - 7,210 - 87,600 = 59,495 $m^3$*

*The revised facility appears to have the capacity to function as a retention facility with a permanent pool. However, it must be recognized that these calculations are based on average precipitation, evaporation, and losses. During years of low rainfall, the pool may not be maintained.*

## 8.7 LAND-LOCKED RETENTION

Watershed areas which drain to a central depressions with no positive outlet can be evaluated using a mass flow routing procedure to estimate flood elevations. Typical examples would be retention basins in karst topography or other areas having high infiltration rates. Although this procedure is fairly straightforward, the evaluation of basin outflow is a complex hydrologic phenomenon that requires good field measurements and a thorough understanding of local conditions. Since outflow rates for flooded conditions are difficult to calculate, field measurements are desirable.

A mass routing procedure for the analysis of land-locked retention areas is illustrated in figure 8-23. The step-by-step procedure follows:

Step 1. Obtain cumulative rainfall data for the design storm. If no local criteria are available, a 100 year, 10 day storm is suggested[18].

Step 2. Calculate the cumulative inflow to the land-locked retention basin using the rainfall data from Step 1 and an appropriate runoff hydrograph method (see chapter 3).

Step 3. Develop the basin outflow from field measurements of hydraulic conductivity or infiltration, taking into consideration worst-case water table conditions. Hydraulic conductivity/infiltration should be established using insitu test methods. The mass outflow can then be plotted with a slope corresponding to the worst-case outflow in mm/hr.

Step 4. Draw a line tangent to the mass inflow curve from Step 2 having a slope parallel to the mass outflow line from Step 3.

Step 5. Locate the point of tangency between the mass inflow curve of Step 2 and the tangent line drawn for Step 4. The distance from this point of tangency and the mass outflow line multiplied by the drainage area represents the maximum storage required for the design runoff.

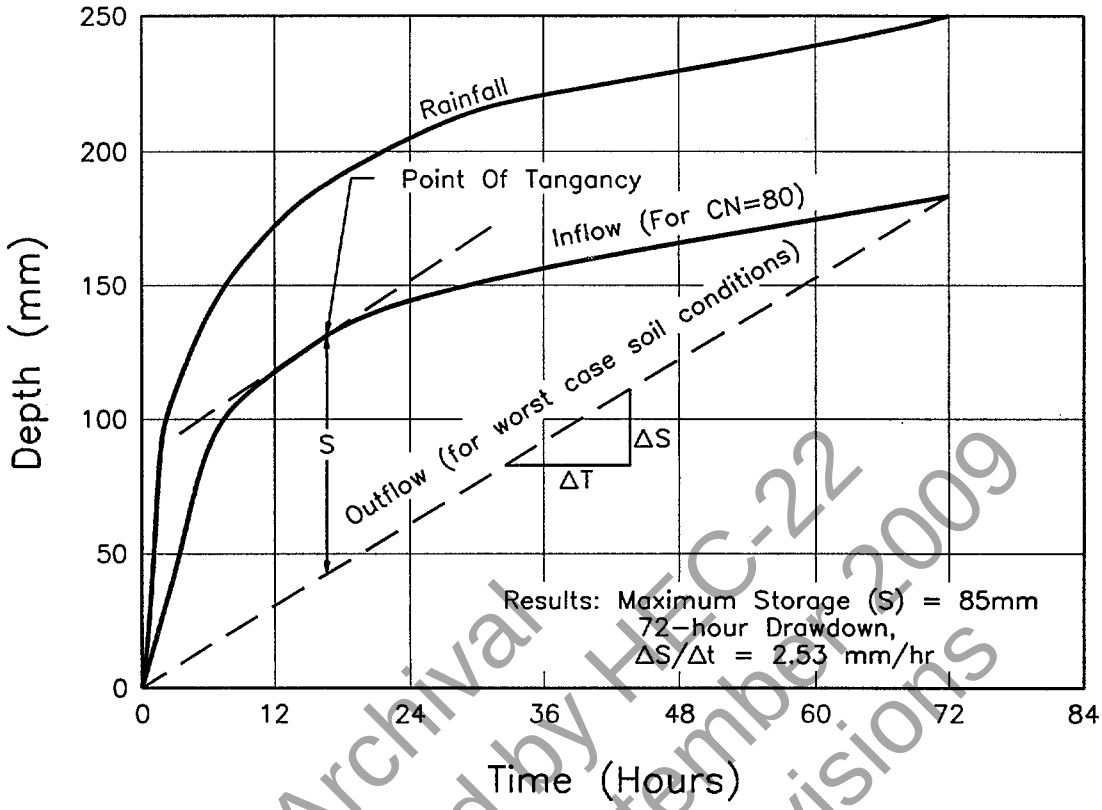


**Figure 8-23. Mass routing procedure.**

Step 6. Determine the flood elevation associated with the maximum storage volume determined in Step 5. Use this flood elevation to evaluate flood protection requirements of the project. The zero volume elevation shall be established as the normal wet season water surface or water table elevation or the pit bottom, whichever is highest.

If runoff from a project area discharges into a drainage system tributary to the land-locked depression, detention storage facilities may be required to comply with the pre-development discharge requirements for the project.

# 9. PUMP STATIONS

## 9.1 INTRODUCTION

Storm water pump stations are necessary to remove storm water from highway sections that can not be drained by gravity. Because of high costs and the potential problems associated with pump stations, their use is recommended only where other systems are not feasible. When operation and maintenance costs are capitalized, a considerable expenditure can be justified for a gravity system. Alternatives to pump stations include deep tunnels, siphons and recharge basins (although recharge basins are often aesthetically unpleasing and can create maintenance problems). General guidance and information on all aspects of pump station design can be found in Highway Storm Water Pumping Stations, Volume 1 & 2, FHWA-IP-82-17, NTIS numbers PB 84-152727 and 152735[52].

## 9.2 DESIGN CONSIDERATIONS

Pump station design presents the designer with a challenge to provide a cost-effective drainage system that meets the needs of the project. There are a myriad of considerations involved in their design. Below is a listing of some of them:

- wet-pit vs. dry-pit
- type of pumps
- number and capacity of pumps
- motor vs. engine drive
- peak flow vs. storage
- force main vs. gravity
- above grade vs. below grade
- monitoring systems
- backup systems
- maintenance requirements

Many of the decisions regarding the above are currently based on engineering judgment and experience. To assure cost-effectiveness, the designer should assess each choice and develop economic comparisons of alternatives on the basis of annual cost. However, some general recommendations can be made which will help minimize the design effort and the cost of these expensive drainage facilities. These recommendations are discussed in the following pages.

For additional information on the design and use of pump stations see references 52, 53, 54, and 55. The Hydraulic Institute, 9 Sylvan Way, Parsippany, New Jersey, 07054-3802 has developed standards for pumps. Pump station design should be consistent with these standards[54, 55].

### 9.2.1 Location

Economic and design considerations dictate that pump stations be located near the low point in the highway drainage system they are intended to serve. Hopefully a frontage road or overpass is available for easy access to the station. The station and access road should be located on high ground so that access can be obtained if the highway becomes flooded. Soil borings should be made during the selection of the site to determine the allowable bearing capacity of the soil and to identify any potential problems.

Architectural and landscaping decisions should be made in the location phase for above-ground stations so the station will blend into the surrounding community. The following are considerations that should be used in the location and design of pump stations.

- Modern pump stations can be architecturally pleasing with a minimum increase in cost.
- Clean functional lines will improve the station's appearance.
- Masonry or a textured concrete exterior can be very pleasing.
- Screening walls may be provided to hide exterior equipment and break up the lines of the building.
- A small amount of landscaping can substantially improve the overall appearance of the site.
- It may be necessary or desirable to place the station entirely underground.
- Ample parking and work areas should be provided adjacent to the station to accommodate maintenance requirements.

### 9.2.2 Hydrology

Because of traffic safety and flood hazards, pump stations serving major expressways and arterials are usually designed to accommodate a 50-year storm. It is desirable to check the drainage system for the 100-year storm to determine the extent of flooding and the associated risk. Every attempt should be made to keep the drainage area tributary to the station as small as possible. By-pass or pass-through all possible drainage to reduce pumping requirements. Avoid future increases in pumping by isolating the drainage area, i.e., prevent off-site drainage from possibly being diverted to the pump station. Hydrologic design should be based on the ultimate development of the area which must drain to the station.

Designers should consider storage, in addition to that which exists in the wet well, at all pump station sites. For most highway pump stations, the high discharges associated with the inflow hydrograph occur over a relatively short time. Additional storage, skillfully designed, may greatly reduce the peak pumping rate required. An economic analysis can be used to determine the optimum combination of storage and pumping capacity. Because of the nature of the sites where highway related pump stations are located, it is usually necessary to locate storage well below normal ground level.

If flow attenuation is required for purposes other than reducing the size of the pump facility, and cannot be obtained upstream of the station, consideration may be given to providing the storage downstream of the pump station. This will require large flows to be pumped and will result in higher pump installation and operation costs.

If storage is used to reduce peak flow rates, a routing procedure must be used to design the system. The routing procedure integrates three independent elements to determine the required pump rate; an inflow hydrograph, a stage-storage relationship and a stage-discharge relationship.

### 9.2.3 Collection Systems

Storm drains leading to the pumping station are typically designed on mild grades to minimize depth and associated construction cost. To avoid siltation problems in the collection system, a minimum grade that produces a velocity of 1 m/s (3 ft/s) in the pipe while flowing full is suggested. Minimum cover or local head requirements should govern the depth of the uppermost inlets. The inlet pipe should enter the station perpendicular to the line of pumps. The inflow should distribute itself equally to all pumps. Baffles may be required to ensure that this is achieved.

Collector lines should preferably terminate at a forebay or storage box. However, they may discharge directly into the station. Under the latter condition, the capacity of the collectors and the storage within them is critical to providing adequate cycling time for the pumps and must be carefully calculated. To avoid siltation problems in storage units, a minimum grade of 2 percent should be used.

Storm drainage systems tributary to pump stations can be quite extensive and costly. For some pump stations, the amount of storage in the collection piping may be significant. It may also be possible to effectively enlarge the collection system near the pump station in order to develop the needed storage volumes.

It is recommended that screens be used to prevent large objects from entering the system and possibly damaging the pumps. Screens should be used in combination with curb opening inlets in sag locations. This approach has the additional advantages of possibly eliminating costly trash racks and simplifying debris removal since debris can be more easily removed from the roadway than the wet well.



### 9.2.4 Station Types

Basically, there are two types of stations, wet-pit and dry-pit. Each of these types are discussed in the following:

Wet-Pit Stations: In the wet-pit station, the pumps are submerged in a wet well or sump with the motors and the controls located overhead. With this design, the storm water is pumped vertically through a riser pipe. The motor is commonly connected to the pump by a long drive shaft located in the center of the riser pipe. See figure 9-1 for a typical layout. Another type of wet-pit design involves the use of submersible pumps. The submersible pump commonly requires less maintenance and less horsepower because a long drive shaft is not required. Submersible pumps also allow for convenient maintenance in wet-pit stations because of easy pump removal. Submersible pumps are now available in large sizes and should be considered for use in all station designs. Rail systems are available which allow removal of pumps without entering the wet well.

Dry-Pit Stations: Dry-pit stations consist of two separate elements: the storage box or wet well and the dry well. Storm water is stored in the wet well which is connected to the dry well by horizontal suction piping. The storm water pumps are located on the floor of the dry well. Centrifugal pumps are usually used. Power is provided by either close-coupled motors in the dry well or long drive shafts with the motors located overhead. The main advantage of the dry-pit station for storm water is the availability of a dry area for personnel to perform routine and emergency pump and pipe maintenance. See figure 9-2 for a typical layout.

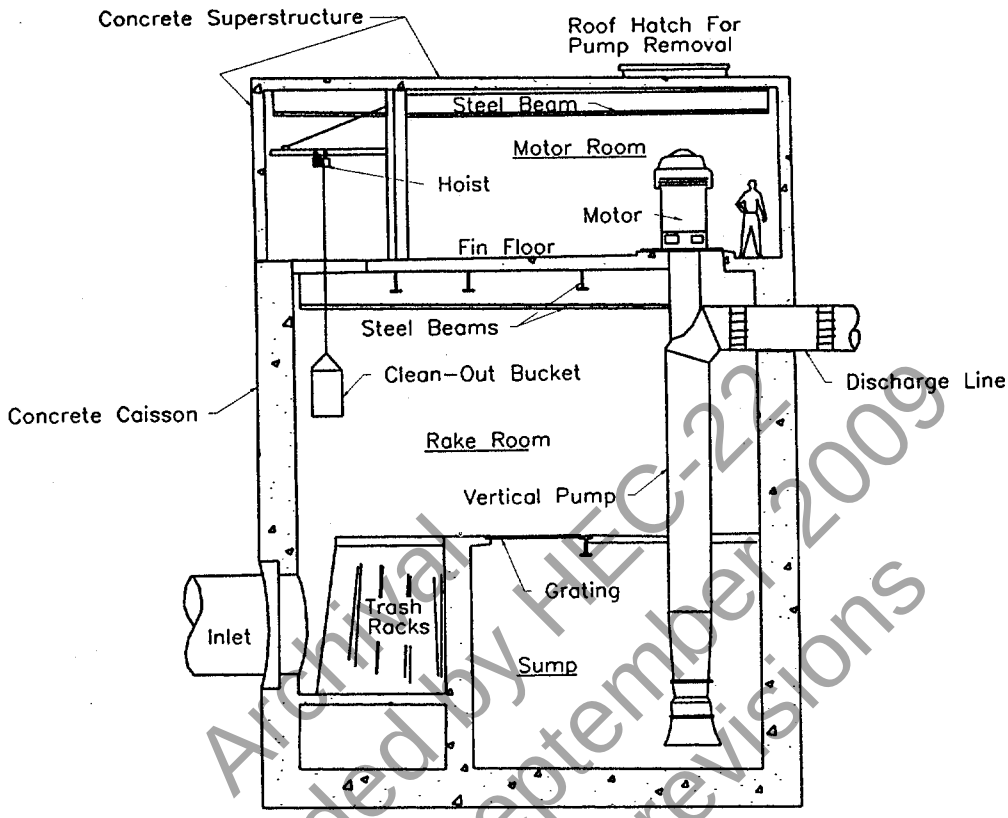


**Figure 9-1. Typical wet-pit station.** [51]



### 9.2.5 Pump Types

The most common types of storm water pumps are axial flow (propeller), radial flow (impeller) and mixed flow (combination of the previous two). Each type of pump has its particular merits.

Axial Flow Pumps - Axial flow pumps lift the water up a vertical riser pipe; flow is parallel to the pump axis and drive shaft. They are commonly used for low head, high discharge applications. Axial flow pumps do not handle debris particularly well because the propellers may be damaged if they strike a relatively large, hard object. Also, fibrous material will wrap itself around the propellers.

Radial Flow Pumps - Radial flow pumps utilize centrifugal force to move water up the riser pipe. They will handle any range of head and discharge, but are the best choice for high head applications. Radial flow pumps generally handle debris quite well. A single vane, non-clog impeller handles debris the best because it provides the largest impeller opening. The debris handling capability decreases with an increase in the number of vanes since the size of the openings decrease.

Mixed Flow Pumps - Mixed flow pumps are very similar to axial flow except they create head by a combination of lift and centrifugal action. An obvious physical difference is the presence of the impeller

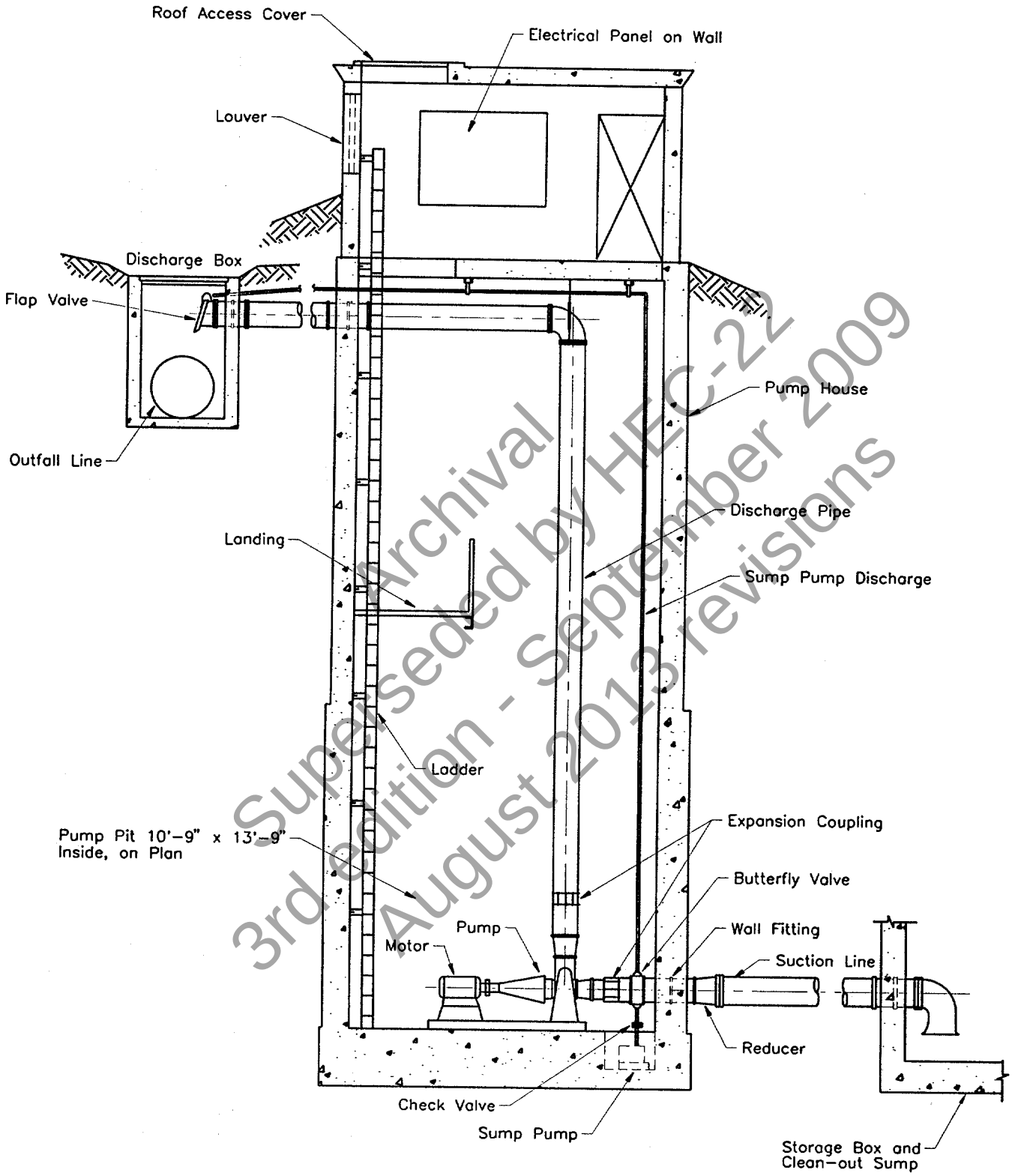




**Figure 9-2. Typical dry-pit station.** [51]

"bowl" just above the pump inlet. They are used for intermediate head and discharge applications and handle debris slightly better than propellers.

All pumps can be driven by motors or engines housed overhead or in a dry well, or by submersible motors located in a wet well. Submersible pumps frequently provide special advantages in simplifying the design, construction, maintenance and, therefore, cost of the pumping station. Use of anything other than a constant speed, single stage, single suction pump would be rare.

The pump selection procedure is to first establish the criteria and then to select a combination from the options available which clearly meets the design criteria. Cost, reliability, operating and maintenance requirements are all important considerations when making the selection. It is difficult and beyond the scope of this Manual to develop a totally objective selection procedure. First costs are usually of more concern than operating costs in storm water pump stations since the operating periods during the year are relatively short. Ordinarily, first costs are minimized by providing as much storage as possible.

### 9.2.6 Submergence

Submergence is the depth of water above the pump inlet necessary to prevent cavitation and vortexing. It varies significantly with pump type and speed and atmospheric pressure. This dimension is provided by the pump manufacturer and is determined by laboratory testing. A very important part of submergence is the required net positive suction head (NPSH) because it governs cavitation. Net positive suction head is the minimum pressure under which fluid will enter the eye of the impeller. The available NPSH should be calculated and compared to the manufacturer's requirement. Additional submergence may be required at higher elevations. As a general rule, radial flow pumps require the least submergence while axial flow pumps require the most.

One popular method of reducing the submergence requirement (and therefore the station depth) for axial and mixed flow pumps, when cavitation is not a concern, is to attach a suction umbrella. A suction umbrella is a dish-shaped steel plate attached to the pump inlet which improves the entrance conditions by reducing the intake velocities.

### 9.2.7 Water-Level Sensors

Water-level sensors are used to activate the pumps and, therefore, are a vital component of the control system. There are a number of different types of sensors that can be used. Types include the float switch, electronic probes, ultrasonic devices, mercury switch, and air pressure switch.

The location or setting of these sensors control the start and stop operations of pump motors. Their function is critical because pump motors or engines must not start more frequently than an allowable number of times per hour (i.e., the minimum cycle time) to avoid damage. To prolong the life of the motors, sufficient volume must be provided between the pump start and stop elevations to meet the minimum cycle time requirement. The on-off setting for the first pump is particularly important because it defines the most frequently used cycle.

### 9.2.8 Pump Rate and Storage Volume

There is a complex relationship between the variables of pumping rates, storage and pump on-off settings in pump station design. Additionally, the allowable pumping rate may be set by storm water

management limitations, capacity of the receiving system, desirable pump size, or available storage. Multiple pumps are usually recommended for redundancy, and the number of pumps may be varied to achieve the required pump capacity. A trial and success approach is usually necessary for estimating pumping rates and required storage for a balanced design. The goal is to develop an economic balance between storage volume and allowable or desired pump capacity.

### 9.2.9 Power

Several types of power may be available for a pump station. Examples are electric motors and gasoline, diesel or natural gas engines. The designer should select the type of power that best meets the needs of the project based on an estimate of future energy considerations and overall station reliability. A comparative cost analysis of alternatives is helpful in making this decision. However, when readily available, electric power is usually the most economical and reliable choice. The maintenance engineer should provide input in the selection process.

There generally is a need for backup power. However, if the consequences of failure are not severe, backup power may not be required. The decision to provide backup power should be based on economics and safety. For electric motors, two independent electrical feeds from the electric utility with an automatic transfer switch may be the cost-effective choice when backup power is required. A standby generator is generally less cost-effective because of its initial costs. Also, standby generators require considerable maintenance and testing to ensure operation in times of need.

For extensive depressed freeway systems involving a number of electric motor-driven stations, a mobile generator may be the cost-effective choice for backup power. A trailer mounted generator can be stored at any one of the pump stations. If a power outage occurs, maintenance forces can move the generator to the affected station to provide temporary power. If a mobile generator is used as the source of backup power, it may be necessary to add additional storage to compensate for the time lag that results in moving the generator from site to site. This lag will typically be 1.0 to 1.5 hours from the time the maintenance forces are notified.

### 9.2.10 Discharge System

The discharge piping should be kept as simple as possible. Pump systems that lift the storm water vertically and discharge it through individual lines to a gravity storm drain as quickly as possible are preferred. Individual pump discharge lines are the most cost-effective system for short outfall lengths. Damaging pump reversal could occur with very long force mains. The effect of storm water returning to the sump after pumping stops should be considered. Individual lines may exit the pumping station either above or below grade. Frost depth shall be considered while deciding the depth of discharge piping. Frozen discharge pipes could exert additional back pressure on pumps.

It may be necessary to pump to a higher elevation using long discharge lines. This may dictate that the individual lines be combined into a force main via a manifold. For such cases, check valves must be provided on the individual lines to keep storm water from running back into the wet well and restarting the pumps or prolonging their operation time. Check valves should preferably be located in horizontal lines. Gate valves should be provided in each pump discharge line to provide for continued operation during periods of repair, etc. A cost analysis should be performed to determine what length and type of discharge piping justifies a manifold. The number of valves required should be kept to a minimum to reduce cost, maintenance and head loss through the system.

### 9.2.11 Flap Gates And Valving

Flap Gates - The purpose of a flap gate is to restrict water from flowing back into the discharge pipe and to discourage entry into the outfall line. Flap gates are usually not water tight so the elevation of the discharge pipe should be set above the normal water levels in the receiving channel. If flap gates are used, it may not be necessary to provide for check valves.

Check Valves - Check valves are water tight and are required to prevent backflow on force mains which contain sufficient water to restart the pumps. They also effectively stop backflow from reversing the direction of pump and motor rotation. They must be used on manifolds to prevent return flow from perpetuating pump operation. Check valves should be "non-slam" to prevent water hammer. Types include: swing, ball, dash pot and electric.

Gate Valves - Gate valves are simply a shut-off device used on force mains to allow for pump or valve removal. These valves should not be used to throttle flow. They should be either totally open or totally closed.

Air/Vacuum Valves - Air/Vacuum valves are used to allow air to escape the discharge piping when pumping begins and to prevent vacuum damage to the discharge piping when pumping stops. They are especially important with large diameter pipe. If the pump discharge is open to the atmosphere, an air-vacuum release valve is not necessary. Combination air release valves are used at high points in force mains to evacuate trapped air and to allow entry of air when the system is drained.



### 9.2.12 Trash Racks And Grit Chambers

Trash racks should be provided at the entrance to the wet well if large debris is anticipated. For storm water pumping stations, simple steel bar screens are adequate. Usually, the bar screens are inclined with bar spacings approximately 1.5 inches. Constructing the screens in modules facilitate removal for maintenance. If the screen is relatively small, an emergency overflow should be provided to protect against clogging and subsequent surcharging of the collection system. Screening large debris at surface inlets may be very effective in minimizing the need for trash racks.

If substantial amounts of sediment are anticipated, a chamber may be provided to catch solids that are expected to settle out. This will minimize wear on the pumps and limit deposits in the wet well. The grit chamber should be designed so that a convenient means of sediment removal is available.

### 9.2.13 Ventilation

Ventilation of dry and wet wells is necessary to ensure a safe working environment for maintenance personnel. Wet wells commonly have exhaust fan systems that draw air from the bottom of the wet well. The ventilation system can be activated by a switch at the entrance to the station. Maintenance procedures should require personnel to wait ten (10) minutes after ventilation has started before entering the well. Some owners require that the air in the wet well be tested prior to allowing entry. Safety procedures for working in wet wells should be well established and carefully followed.

If mechanical ventilation is required to prevent buildup of potentially explosive gasses, the pump motors or any spark producing equipment should be rated explosion proof or the fans run continuously.

Heating and dehumidifying requirements are variable. Their use is primarily dependent upon equipment and station type, environmental conditions and station use.

### 9.2.14 Roof Hatches and Monorails

It will be necessary to remove motors and pumps from the station for periodic maintenance and repair. Removable roof hatches located over the equipment are a cost-effective way of providing this capability. Mobile cranes can simply lift the smaller equipment directly from the station onto maintenance trucks. Monorails are usually more cost-effective for larger stations.

### 9.2.15 Equipment Certification and Testing

Equipment certification and testing is a crucial element of pump station design. The purchaser has a right to witness equipment testing at the manufacturer's lab. However, this is not always practical. As an alternative, the manufacturer should provide certified test results to the owner. It is good practice to include in the contract specifications the requirement for acceptance testing by the owner, when possible, to ensure proper operation of the completed pump station. The testing should be done in the presence of the owners representative. If the representative waves his right to observe the test, a written report should be provided to give assurance that the pump equipment meets all performance requirements. Any component which fails should be repaired and retested.



### 9.2.16 Monitoring

Pump stations are vulnerable to a wide range of operational problems from malfunction of the equipment to loss of power. Monitoring systems such as on-site warning lights and remote alarms can help minimize such failures and their consequences.

Telemetering is an option that should be considered for monitoring critical pump stations. Operating functions may be telemetered from the station to a central control unit. This allows the central control unit to initiate corrective actions immediately if a malfunction occurs. Such functions as power, pump operations, unauthorized entry, explosive fumes, and high water levels can be monitored effectively in this manner. Perhaps the best overall procedure to assure the proper functioning of a pump station is the implementation of a regular schedule of maintenance conducted by trained, experienced personnel.

### 9.2.17 Hazardous Spills

The possibility of hazardous spills is always present under highway conditions. In particular, this has reference to gasoline, and the vulnerability of pump stations and pumping equipment to fire damage. There is a history of such incidents having occurred and also of spills of oils, corrosive chemicals, pesticides and the like having been flushed into stations, with undesirable results. The usual design practice has been to provide a closed conduit system leading directly from the highway to the pump station without any open forebay to intercept hazardous fluids, or vent off volatile gases. With a closed system, there must be a gas-tight seal between the pump pit and the motor room in the pump station. Preferably, the pump station should be isolated from the main collection system and the effect of hazardous spills by a properly designed storage facility upstream of the station. This may be an open

forebay or a closed box below the highway pavement or adjacent to it. The closed box must be ventilated by sufficient grating area at each end.

### 9.2.18 Construction

The method of construction has a major impact on the cost of the pump station. For near continuous operation, such as pumping sewage, it has been estimated that construction represents more than 20% of the pump station costs over a 10-year period. With a less frequently operating storm water pump station, operating costs may be insignificant compared to construction costs. Therefore, the type of construction should be chosen carefully. Options would typically include caisson construction, in which the station is usually circular, and open-pit construction. Soil conditions are the primary factor in selecting the most cost-effective alternative.

Feedback should be provided by the construction personnel on any problems encountered in the construction of the station so the designers can improve future designs. Any changes should be documented by "as-built" drawings. Construction inspections of pump stations should be conducted by personnel who are knowledgeable and experienced with such equipment.

### 9.2.19 Maintenance

Since major storm events are infrequent, a comprehensive, preventive maintenance program should be developed for maintaining and testing the equipment so that it will function properly when needed. Instruments such as hour meters and number-of-starts meters should be used on each pump to help schedule maintenance. Input from maintenance forces should be a continuous process so that each new generation of stations will be an improvement.

### 9.2.20 Retrofitting Stations

Retrofitting existing storm water pump stations may be required when changes to the highway cause an increase in runoff. The recommended approach to this problem is to increase the capacity of the station without making major structural changes. This can sometimes be achieved by using a cycling sequence which requires less cycling volume or power units which allow a greater number of starts per hour (i.e., shorter cycling time). Submersible pumps have been used effectively in retrofitting stations because of the flexibility in design and construction afforded by their frequent cycling capability. Increased external storage can often minimize the need to increase pump capacity.

### 9.2.21 Safety

All elements of the pump station should be carefully reviewed for safety of operation and maintenance. Ladders, stairwells and other access points should facilitate use by maintenance personnel. Adequate space should be provided for the operation and maintenance of all equipment. Particular attention should be given to guarding moving components such as drive shafts and providing proper and reliable lighting. It may also be prudent to provide air testing equipment in the station so maintenance personnel can be assured of clean air before entering.

Pump stations may be classified as a confined space. In this case, access requirements along with any safety equipment are all defined by code. Pump stations should be designed to be secure from entry by unauthorized personnel; as few windows as possible should be provided.

## 9.3 DESIGN CRITERIA

The following recommendations are being made with the objective of minimizing the construction, operation and maintenance costs of highway storm water pump stations while remaining consistent with the practical limitations of all aspects.

### 9.3.1 Station Type And Depth

Since dry-pit stations are as much as 60% more expensive than wet-pit stations, wet-pit stations are most often used. Dry-pit stations are more appropriate for handling sewage because of the potential health hazards to maintenance personnel. The hazards associated with pumping storm water usually do not warrant the added expense. Some advantages associated with dry-pit stations include ease of access for repair and maintenance and the protection of equipment from fire and explosion.

The station depth should be minimum. No more depth than that required for pump submergence and clearance below the inlet invert is necessary, unless foundation conditions dictate otherwise.

### 9.3.2 Power

Electric power is usually the most desirable power source if it is available. Constant speed, 3-phase induction motors (National Electrical Manufacturers Association Design B) are recommended. Motor voltages between 440 and 575 are very economical for pumping applications. Consequently, it is recommended that 225 kW (300 hp) be the maximum size motor used. This size is also a good upper limit for ease of maintenance.

Consideration should be given to whether the pump station is to have standby power (SBP). If the owner prefers that stations have a SBP receptacle, manual transfer switch, and a portable engine/generator set, then the practical power limit of the pumps becomes about 56 kW (75 hp) since this is the limit of the power generating capabilities of most portable generator units. Two pumps would be operated by one engine/generator set.

### 9.3.3 Discharge Head And System Curve

Since storm water pumps are extremely sensitive to changes in head, the head demand on the pumps should be calculated as accurately as possible. All valve and bend losses should be considered in the computations. In selecting the size of discharge piping, consideration should be given to the manufactured pump outlet size vs. the head loss that results from a matching pipe size. The discharge pipe may be sized larger to reduce the loss in the line. This approach should identify a reasonable compromise in balancing cost.

The combination of static head, velocity head and various head losses in the discharge system due to friction is called total dynamic head (TDH). The TDH is computed as follows:

$$TDH = H_s + H_f + H_v + H_l \tag{9-1}$$

where: TDH = total dynamic head, m (ft)
$H_s$ = static head, m (ft)
$H_f$ = friction head, m (ft) (i.e. friction loss)
$H_v$ = velocity head, m (ft) [ $= V^2/(2g)$]
$H_l$ = losses through fittings, valves, etc., m (ft)

It is usual to minimize these various head losses by the selection of correctly sized discharge lines and other components.

Once the head losses have been calculated for the range of discharges expected, the system curve (Q vs. TDH) can be plotted. This curve defines the energy required to pump any flow through the discharge system. It is especially critical for the analysis of a discharge system with a force main. When overlaid with pump performance curves (provided by manufacturer), it will yield the pump operating points (see figure 9-3).

When the pump is raising the water from the lowest level, the static head will be greatest and the discharge will be the least. When operating at the highest level, the static head will be the least and the discharge will be the greatest. The capabilities of the pump must always be expressed in both quantity of discharge and the total dynamic head at a given level.

A pump is selected to operate with the best efficiency at its design point which corresponds to the design water level of the station. Pump performance is expressed as the required discharge in cubic meters per hour (gallons per minute) at the resulting total dynamic head. The efficiency of a storm water pump at its design point may be 75 or 80% or more, depending on the pump type.

When the static lift is greatest (low water in sump), the power required (kilowatts or horsepower) may be the greatest even though the quantity of water raised is less. This is because the pump efficiency may also be much less. The pump selection should be made so that maximum efficiency is at the design point.

Pumps for a given station are selected to all operate together to deliver the design flow (Q) at a total dynamic head (TDH) computed to correspond with the design water level. Because pumps must operate over a range of water levels, the quantity delivered will vary significantly between the low level of the range and the high level. Typically, the designer will be required to specify at least three points on the performance curve. These will typically be the conditions for the TDH near the highest head, the design head and the lowest head expected over the full operating range of the pump. A curve of total dynamic head versus pump capacity is always plotted for each pump by the manufacturer (see figure 9-4 for a typical curve). When running, the pump will respond to the total dynamic head prevailing and the quantity of discharge will be in accordance with the curve. The designer must study the pump performance curves for various pumps in order to develop an understanding of the pumping conditions (head, discharge, efficiency, horsepower, etc.) throughout the full range of head that the pump will operate under. The system specified must operate properly under the full range of specified head.

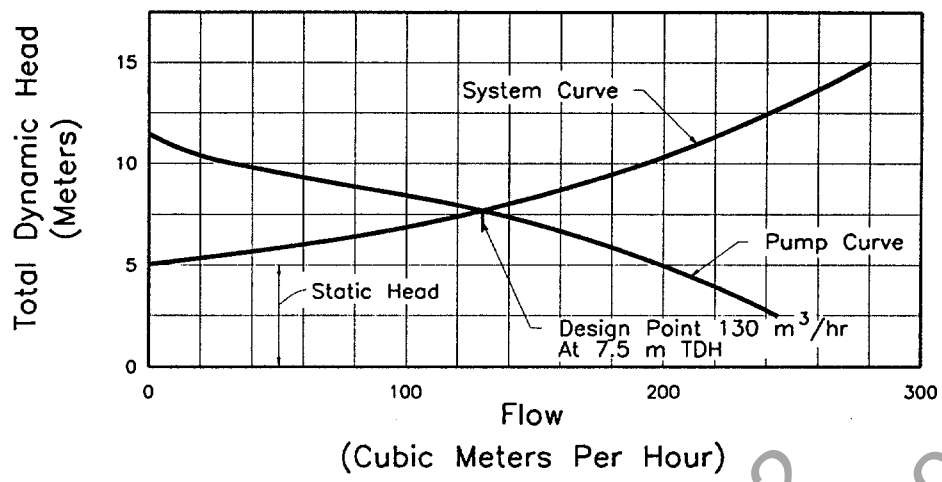


**Figure 9-3. System head curve.** [51]

The total dynamic head (TDH) must be determined for a sufficient number of points to draw the system head curve. Adjustments may need to be made to these curves to account for losses within the pumping unit provided by the manufacturer. The TDH can be computed using equation 9-1.

### 9.3.4 Main Pumps

The designer will determine the number of pumps needed by following a systematic process defined in section 9.4. However, two to three pumps have been judged to be the recommended minimum. If the total discharge to be pumped is small and the area draining to the station has little chance of increasing substantially, the use of a two pump station is preferred. Consideration may be given to over sizing the pumps to compensate, in part, for a pump failure. The two pump system could have pumps designed to pump from 66 to 100% of the required discharge and the three pump system could be designed so that each pump would pump 50% of the design flow. The resulting damage caused by the loss of one pump could be used as a basis for deciding the size and numbers of the pumps.

It is recommended that economic limitations on power unit size as well as practical limitations governing operation and maintenance be used to determine the upper limit of pump size. The minimum number of pumps used may increase due to these limitations.

It is also recommended that equal-size pumps be used. Identical size and type enables all pumps to be freely alternated into service. It is recommended that an automatic alternation system be provided for each pump station. This system would automatically redefine the lead and lag pump after each pump cycle. The lead pump will always come on first, but this pump would be redefined after each start so that each pump in turn would become the lead pump. This equalizes wear and reduces needed cycling storage. It also simplifies scheduling maintenance and allows pump parts to be interchangeable. Hour meters and start meters should be provided to aid in scheduling needed maintenance.

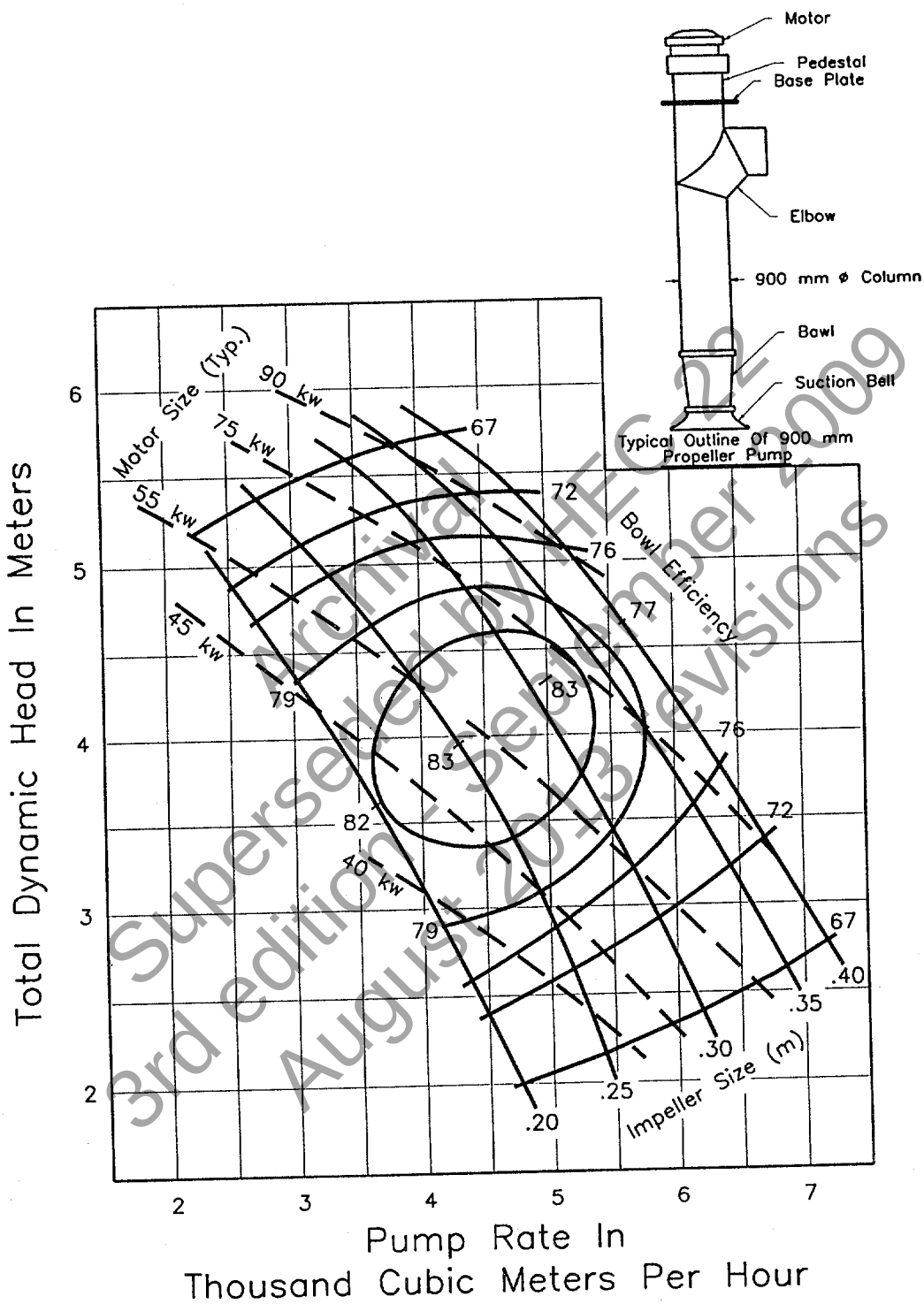




**Figure 9-4. Performance curve for 900 mm (36 in) pump rotating at 590 r.p.m.** [52]

### 9.3.5 Standby/Spare Pumps

Considering the short duration of high inflows, the low frequency of the design storm, the odds of a malfunction, and the typical consequences of a malfunction, spare or standby pumps are typically not warranted in storm water applications. If the consequences of a malfunction are particularly critical, it is more appropriate to add another main pump and reduce all the sizes accordingly.

### 9.3.6 Sump Pumps

These are usually small submersible pumps necessary only in the dry well of dry-pit stations to protect equipment from seepage water damage. Because of their size, they are prone to sediment locking in wet-pit stations and, therefore, are not recommended for those installations. If it is necessary to evacuate the wet well, a portable pump can be used.

### 9.3.7 Storage

An important initial evaluation in pump station design is how much total storage capacity can or should be provided. Using the inflow hydrograph and pump-system curves, various levels of pump capacity can be tried and the corresponding required total storage can be determined. An estimate of the required storage volume can be made by comparing the inflow hydrograph to the controlling pump discharge rate as illustrated in figure 9-5. The volume in the shaded area is the estimated volume available above the last pump turn-on point. The basic principle is that the volume of water as represented by the shaded area of the hydrograph in figure 9-5 is beyond the capacity of the pumps and must be stored. If most of the design storm is allowed to collect in a storage facility, a much smaller pump station can be utilized, with anticipated cost benefits. If the discharge rate is to be limited, ample storage is essential.

Since most highway related pump stations are associated with either short underpasses or long depressed sections, it is not reasonable to consider above ground storage. Water that originates outside of the depressed areas should not be allowed to enter the depressed areas because of the need to pump all of this water. The simplest form of storage for these depressed situations is either the enlargement of the collection system or the construction of an underground storage facility. These can typically be constructed under the roadway area and will not require additional right-of-way. The pump stations can remove the stored water by either the dry pit or the wet pit approach as chosen by the designer.

### 9.3.8 Cycling Sequence And Volumes

Cycling is the starting and stopping of pumps, the frequency of which must be limited to prevent damage and possible malfunction. The pumping system must be designed to provide sufficient volume for safe cycling. The volume required to satisfy the minimum cycle time is dependent upon the characteristics of the power unit, the number and capacity of pumps, the sequential order in which the pumps operate and whether or not the pumps are alternated during operation. The development of the mass curve routing diagram will aid in the definition of pump cycling and volume requirements. Alternation of the first pump to start is generally sufficient to provide proper cycling for storm water pump systems.

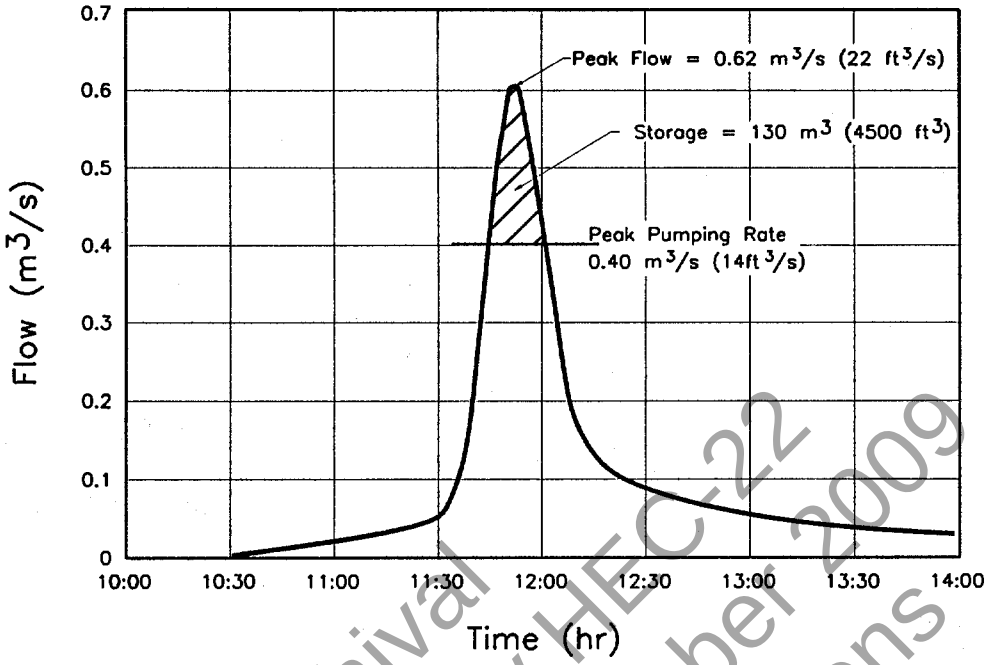


**Figure 9-5. Estimated required storage from inflow hydrograph.**



### 9.3.9 Allowable High Water Elevation

The allowable high water (AHW) elevation in the station should be set such that the water surface elevation at the lowest inlet in the collection system provides 0.3 to 0.6 m (1 to 2 ft) of freeboard below the roadway grate.

### 9.3.10 Clearances

Pump to pump, pump to back wall, and pump to sidewall clearances should be as recommended by the Hydraulic Institute (see figure 9-6.a and 9-6.b for vertical pump dimensions). The clearance from the pump inlet to the floor plus the pump submergence requirement constitutes the distance from the lowest pump off elevation to the wet well floor. The final elevation may have to be adjusted if the type of pump to be installed is different than anticipated.

### 9.3.11 Intake System

The primary function of the intake structure is to supply an even distribution of flow to the pumps. An uneven distribution may cause strong local currents resulting in reduced pump efficiency and undesirable operational characteristics. The ideal approach is a straight channel coming directly into the pump or suction pipe. Turns and obstructions are detrimental, since they may cause eddy currents and tend to initiate deep cored vortices. The inflow should be perpendicular to a line of pumps and water should not flow past one pump to get to another. Unusual circumstances will require a unique design of the intake structure to provide proper flow to the pumps.

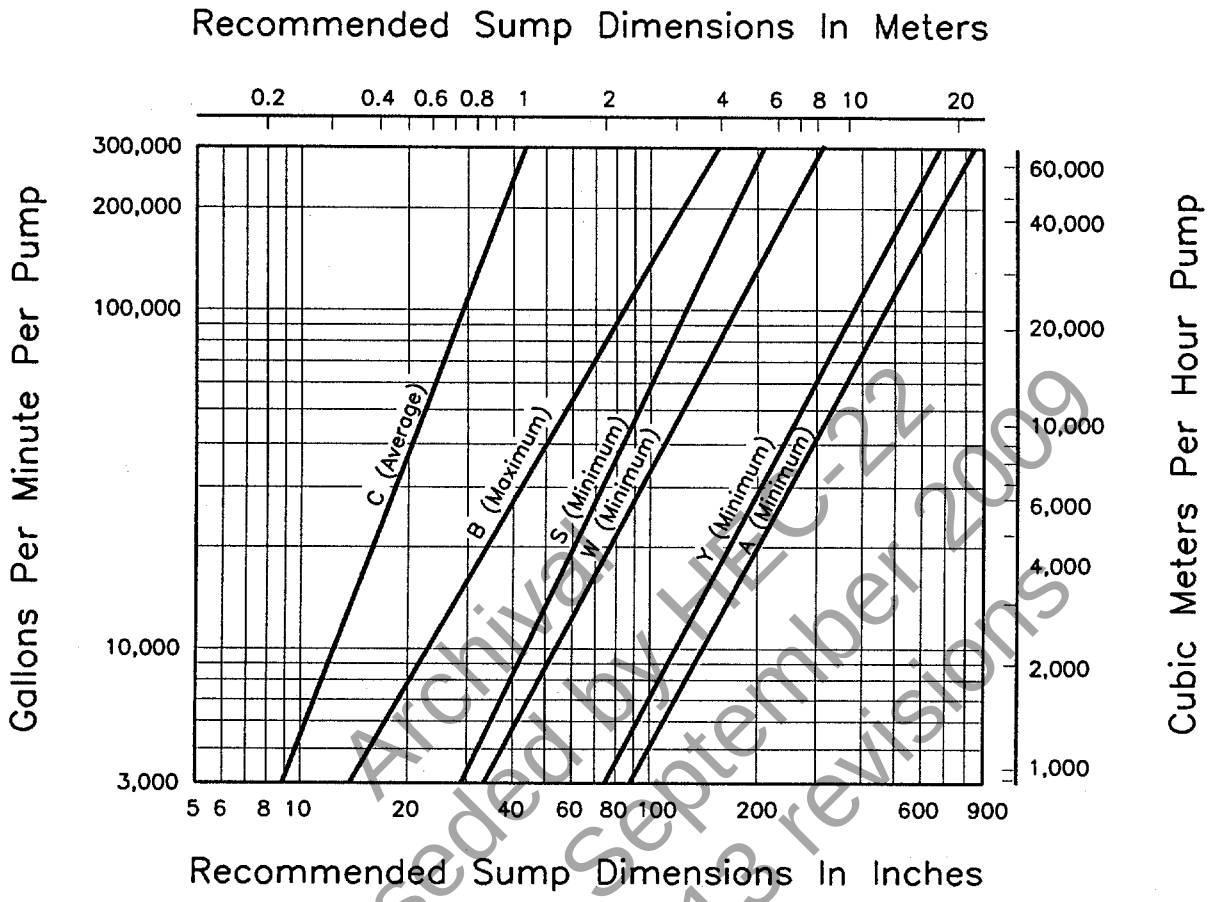


**Figure 9-6.a. Sump dimensions, wet-pit type pumps. See figure 9-6.b for dimension location.**[55]



## 9.4 DETERMINING PUMP STATION STORAGE REQUIREMENTS

Storage capacity is usually required as a part of pump station design to permit the use of smaller, more economical pumps. When determining the volume of storage for a pump station, the designer should recognize that a balance must be reached between pump rates and storage volume; increasing the provided storage will minimize the required pump size. The process of determining appropriate storage volumes and pump sizes requires a trial and success procedure in conjunction with an economic analysis. Pump stations are very costly. Alternatives to minimize total costs need to be considered.

The principles of minimum run time and pump cycling should also be considered during the development of an optimum storage requirement. Typically, the concern for meeting minimum run times and cycling time will be reduced with increased storage volume because the volume of storage is sufficient to prevent these conditions from controlling the pump operation.

The approach used to evaluate the relationship between pump station storage and pumping rate requires development of an inflow mass curve and execution of a mass curve routing procedure. These elements of the design are outlined in the following sections.

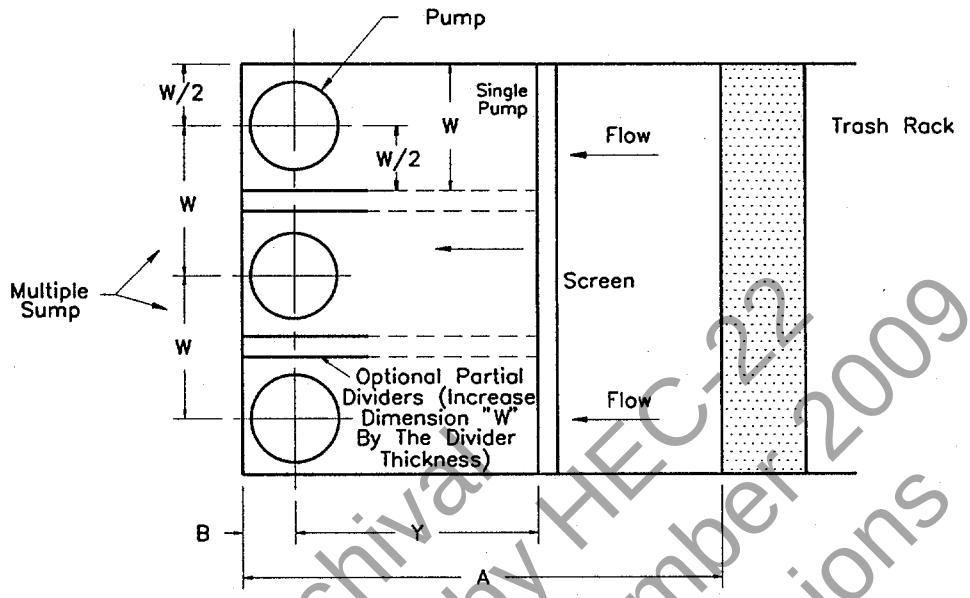


1. Plan View

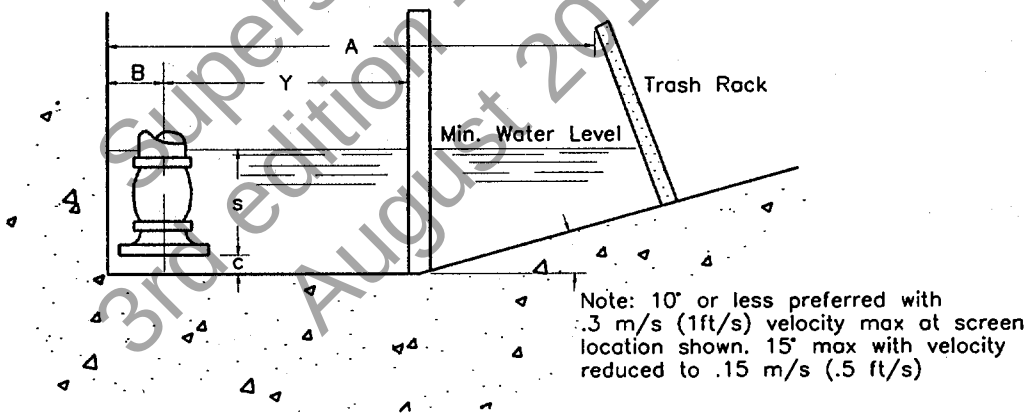


2. Elevation View



**Figure 9-6.b. Wet pit type pumps; plan and elevation. See figure 9-6.a for dimensions.**

### 9.4.1 Inflow Mass Curve

The inflow mass curve is develop by dividing the inflow hydrograph into uniform time increments, computing the inflow volume over each time step, and summing the inflow volumes to obtain a cumulative inflow volume. This cumulative inflow volume is plotted against time to produce the inflow mass curve. Example 9-1 illustrates development of an inflow mass curve.

***Example 9-1***

***Given:*** *The inflow hydrograph illustrated in figure 9-5.*

***Find:*** *Develop an inflow mass curve.*

***Solution:***

*Table 9-1 documents the development of the inflow mass curve. The first column lists the time increments of the inflow hydrograph and the second column lists the inflow values. The third column is the average of the flow at the given time and the previous time. The fourth column is the time increment between the given time and the previous time. The incremental flow tabulated in the fifth column is the average flow from the third column multiplied by the time increment in the fourth column. Finally, the sixth column is the running cumulative flow obtained by adding the incremental flow at the given time to the previous cumulative flow. Figure 9-7 illustrates the resulting inflow mass curve (plot of time vs. cumulative flow values).*



### 9.4.2 Mass Curve Routing

The approach used to evaluate the relationship between pump station storage and pumping rates involves using the mass inflow curve in a graphical mass curve routing procedure. The designer assigns an initial pump discharge rate based on downstream capacity considerations, limits imposed by local jurisdictions, or other criteria. With the inflow mass curve and an assigned pumping rate, the required storage can be determined by various trials of the routing procedure.

It is important that the designer have an understanding of how a typical pump station operates prior to starting the mass curve routing. As storm water flows to the pump station, the water will be stored and the water level will rise to an elevation which activates the first pump to start. If the inflow rate is greater than the pump rate, the water level will continue to rise and cause the second pump to start. This process will be continued until the inflow rate subsides. As the inflow rate drops below the pump rate, the stage in the station will recede until the pump stop elevations are reached. This process is illustrated graphically on the mass curve diagram during the mass flow routing procedure.

The mass flow routing procedure is demonstrated by example 9-2.

***Example 9-2***

***Given:*** *The inflow mass curve in table 9-1 and figure 9-7, and the storage pipe and pump station wet well shown in figure 9-8. The stage-storage relationship for the pipe and pump station wet well are provided in table 9-2 and figure 9-9.*

***Table 9-1. Inflow mass curve tabulation for example 9-1.***

| (1) Time (hr) | (2) Inflow ($m^3/s$) | (3) Average Flow $m^3/s$ | (4) Time Inc. (s) | (5) Inc. Flow ($m^3$) | (6) Cum. Flow ($m^3$) |
|---|---|---|---|---|---|
| 10:30 | 0.000 | --- | --- | --- | 0 |
| 10:35 | 0.003 | 0.002 | 300 | 0.45 | 0.45 |
| 10:40 | 0.006 | 0.005 | 300 | 1.35 | 1.80 |
| 10:45 | 0.009 | 0.008 | 300 | 2.25 | 4.05 |
| 10:50 | 0.011 | 0.010 | 300 | 3.00 | 7.05 |
| 10:55 | 0.014 | 0.013 | 300 | 3.75 | 10.80 |
| 11:00 | 0.017 | 0.016 | 300 | 4.65 | 15.45 |
| 11:05 | 0.020 | 0.019 | 300 | 5.55 | 21.00 |
| 11:10 | 0.023 | 0.022 | 300 | 6.45 | 27.45 |
| 11:15 | 0.025 | 0.024 | 300 | 7.20 | 34.65 |
| 11:20 | 0.028 | 0.027 | 300 | 7.95 | 42.60 |
| 11:25 | 0.031 | 0.030 | 300 | 8.85 | 51.45 |
| 11:30 | 0.034 | 0.033 | 300 | 9.75 | 61.20 |
| 11:35 | 0.071 | 0.053 | 300 | 15.8 | 76.95 |
| 11:40 | 0.127 | 0.099 | 300 | 29.7 | 107 |
| 11:45 | 0.326 | 0.227 | 300 | 67.9 | 175 |
| 11:50 | 0.538 | 0.432 | 300 | 130 | 304 |
| 11:55 | 0.609 | 0.574 | 300 | 172 | 476 |
| 12:00 | 0.481 | 0.545 | 300 | 164 | 640 |
| 12:05 | 0.340 | 0.411 | 300 | 123 | 763 |
| 12:10 | 0.184 | 0.262 | 300 | 78.6 | 842 |
| 12:15 | 0.142 | 0.163 | 300 | 48.9 | 890 |
| 12:20 | 0.113 | 0.128 | 300 | 38.3 | 929 |
| 12:25 | 0.099 | 0.106 | 300 | 31.8 | 960 |
| 12:30 | 0.093 | 0.096 | 300 | 28.8 | 989 |
| 12:35 | 0.076 | 0.085 | 300 | 25.4 | 1015 |
| 12:40 | 0.071 | 0.074 | 300 | 22.1 | 1037 |
| 12:45 | 0.065 | 0.068 | 300 | 20.4 | 1057 |
| 12:50 | 0.059 | 0.062 | 300 | 18.6 | 1076 |
| 12:55 | 0.057 | 0.058 | 300 | 17.4 | 1093 |
| 13:00 | 0.054 | 0.056 | 300 | 16.7 | 1110 |

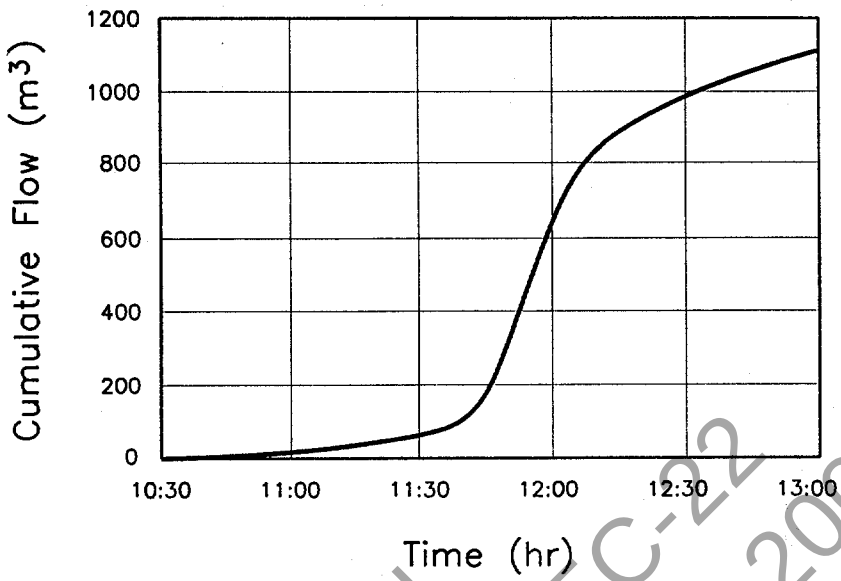


**Figure 9-7. Mass inflow curve for example 9-1.**

***Find:*** *Determine the maximum required pump station storage to reduce the peak flow of 0.62 $m^3/s$ (22 $ft^3/s$) to 0.40 $m^3/s$ (14 $ft^3/s$).*

***Solution:***

*For this design, two equal size pumps are initially selected each having a peak capacity of 0.20 $m^3/s$ (7 $ft^3/s$). It will be assumed that, with both pumps operating, the necessary peak flow of 0.40 $m^3/s$ (14 $ft^3/s$) will be produced.*

*Storage for the pump station will occur in the storm drain and the wet well shown in figure 9-8. The storm drain is a 160 m (525 ft) long, 1220 mm (48 in) diameter pipe placed on a slope of 0.40 %. Using geometric relationships, the volume of storage was determined for various water level elevations. Table 9-2 lists the stage-storage data and the stage-storage curve is illustrated in figure 9-9. Note that the volume in the wet well below elevation 0.0 m (0.0 ft) is not included in the available storage volume. This volume is assumed to be initially filled with water since it is below the initial pump on setting described in the following paragraph.*

*Table 9-3 provides the initial pump control parameters selected. The numbers in parenthesis in table 9-3 are the storage volumes ($m^3$ or $ft^3$) associated with the respective elevations. These volumes are illustrated on the stage-storage curve in figure 9-9. The stage-discharge curve for this pumping plan is shown in figure 9-10.*

*The mass flow routing is performed by plotting the pump discharges on the mass inflow curve in a graphical procedure as illustrated in figure 9-11. The procedure progresses as follows:*

*As indicated in table 9-3, the pump no. 1 start elevation corresponds to a storage value of 55 $m^3$ (2,025 $ft^3$). This point is identified on figure 9-11 by drawing a vertical line from the horizontal axis to the inflow mass curve so that the vertical line intersects the mass curve at a cumulative flow value of 55 $m^3$ (2025 $ft^3$). This occurs near the time of 11:30. At this time, the pump will start to discharge at a rate of 0.20 $m^3/s$ (7 $ft^3/s$).*

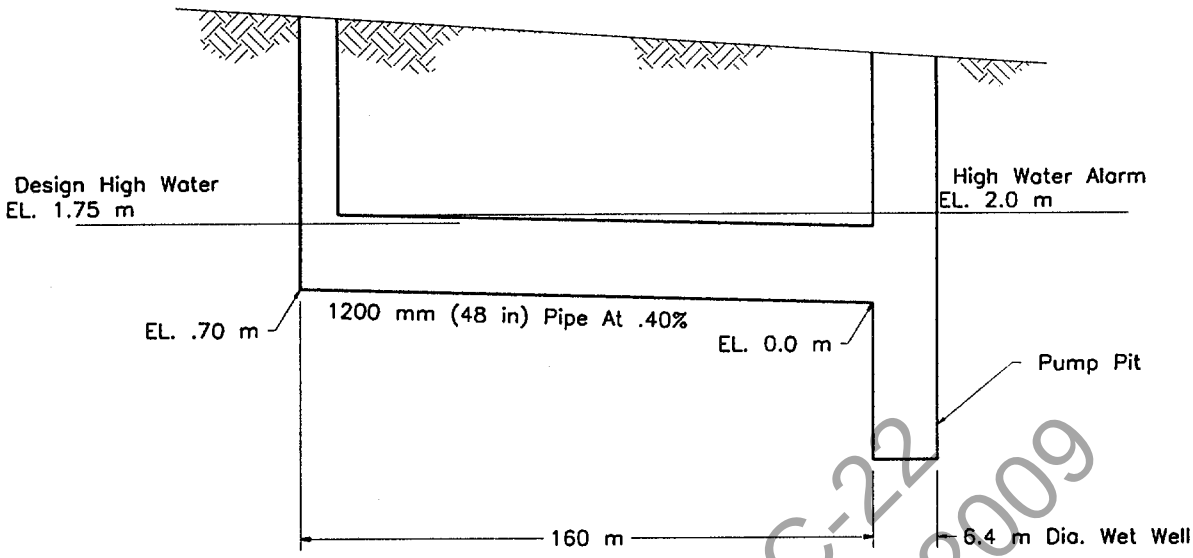


**Figure 9-8. Storage pipe sketch.**

*Next, a pump discharge line is constructed. The slope of this line is equal to the pump rate of 0.20 $m^3/s$ (720 $m^3/hr$). The pump discharge curve starts at the intersection of the vertical line and the baseline (abscissa), and is shown as line AB. During the time the pump is discharging, the inflow rate is approximately 0.03 $m^3/s$ (1 $ft^3/s$). Therefore, the basin will quickly empty and pump no. 1 will shut off. This is shown by the fact that the pump discharge line intersects the inflow mass curve at point B.*

**Table 9-2. Stage - Storage tabulation for example 9-2.**

| *Elevation m (ft)* | *Pipe Storage $m^3$ ($ft^3$)* | *Wet Well Storage $m^3$ ($ft^3$)* | *Total Storage $m^3$ ($ft^3$)* |
|---|---|---|---|
| 0.00 (0.00) | 0 (0) | 0 (0) | 0 (0) |
| 0.20 (0.66) | 7 (250) | 6 (210) | 13 (460) |
| 0.40 (1.31) | 13 (460) | 13 (460) | 26 (920) |
| 0.60 (1.97) | 35 (1240) | 19 (670) | 54 (1910) |
| 0.80 (2.62) | 69 (2430) | 26 (920) | 95 (3350) |
| 1.00 (3.28) | 105 (3700) | 32 (1130) | 137 (4830) |
| 1.20 (3.94) | 140 (4940) | 39 (1380) | 179 (6320) |
| 1.40 (4.59) | 166 (5860) | 45 (1590) | 211 (7450) |
| 1.60 (5.25) | 180 (6350) | 51 (1800) | 231 (8150) |
| 1.80 (5.91) | 185 (6530) | 58 (2050) | 243 (8580) |
| 2.00 (6.56) | 185 (6530) | 64 (2260) | 249 (8790) |
| 2.20 (7.22) | 185 (6530) | 71 (2505) | 256 (9035) |

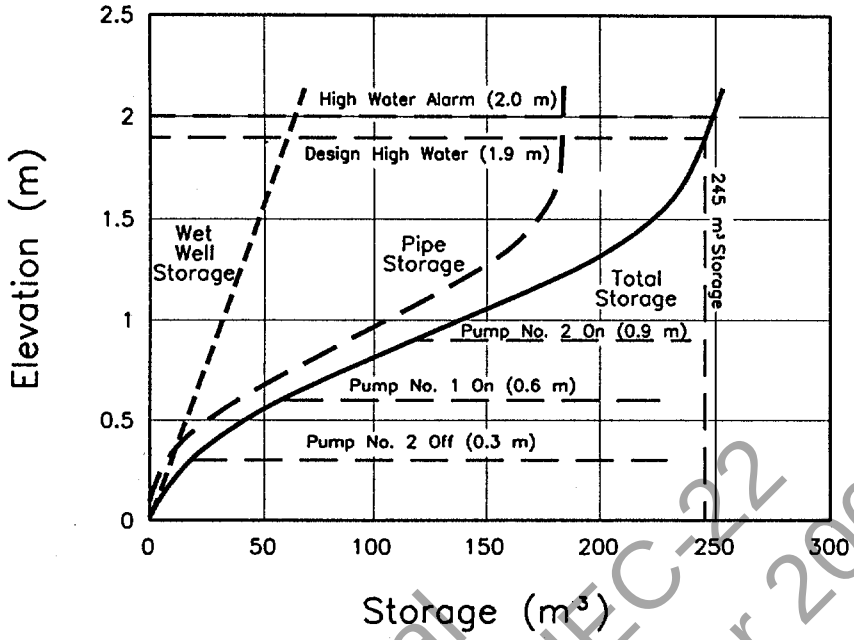


**Figure 9-9. Stage-storage curve for example 9-2.**



*With pump no. 1 shut off, the discharge curve continues as a horizontal line (segment BC) until the water level builds up again to the pump start elevation. This occurs at point C where an additional incremental inflow mass of 55 $m^3$ (2025 $ft^3$) is reached following shut-off of pump no. 1, and the pump restarts.*

*At point C, a line with a slope of 0.20 $m^3/s$ (7 $ft^3/s$) is again constructed to represent discharges from pump no. 1. The pump discharge line continues as line CD, at a slope of 0.20 $m^3/s$ (720 $m^3/hr$) since only pump number 1 has restarted. From point C to D, the inflow and pump discharge lines are diverging. This indicates that inflows are exceeding the capacity of the single pump, and the storage facility is continuing to fill. At point D, the vertical distance between the inflow and pump curves equals 118 $m^3$ (4226 $ft^3$), which represents the point where the second pump starts.*

**Table 9-3. Pump Controls and operational parameters for example 9-2.**

| *Pump No.* | *Pump Flow $m^3/s$ ($ft^3/s$)* | *Pump-Start Elevation m ($m^3$)* | *Pump-Start Elevation ft ($ft^3$)* | *Pump-Stop Elevation m ($m^3$)* | *Pump-Stop Elevation ft ($ft^3$)* |
|---|---|---|---|---|---|
| *1* | *0.20 (7)* | *0.6 (55)* | *2.0 (2,025)* | *0.0 (0)* | *0.0 (0)* |
| *2* | *0.20 (7)* | *0.9 (118)* | *3.0 (4,226)* | *0.3 (17)* | *1.0 (597)* |

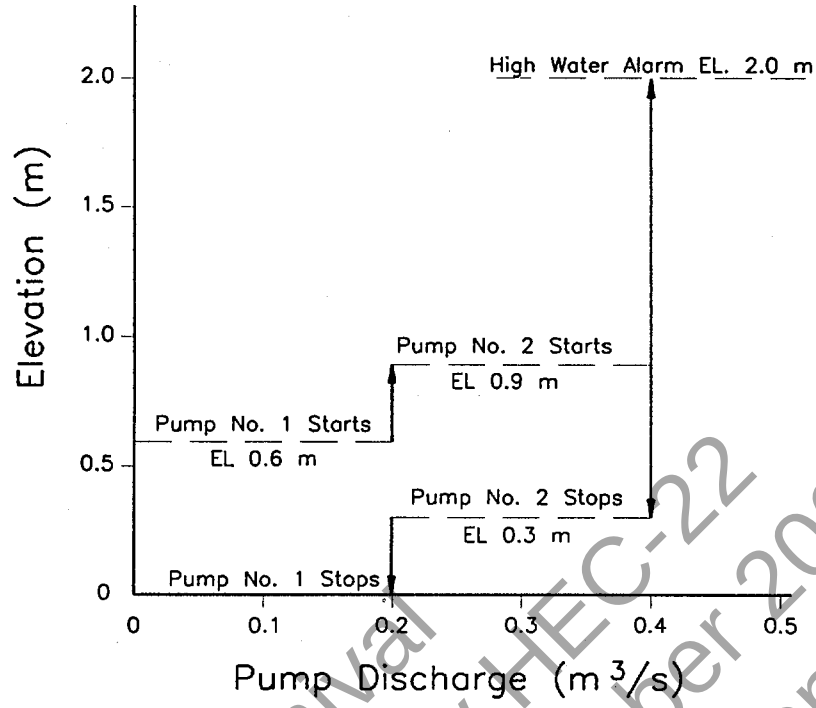


**Figure 9-10. Stage-discharge curve for example 9-2.**

*At point D a new pump curve is constructed having a slope equal to 0.40 m³/s (14.1 ft³/s). This represents the combined discharges from pump no. 1 and pump no. 2. This new pump discharge curve continues until the point where the inflow mass curve and pump curve converge, and the vertical separation between these lines is 17 m³ (597 ft³), representing the point where pump no. 2 shuts off. This occurs at point E in figure 9-11.*

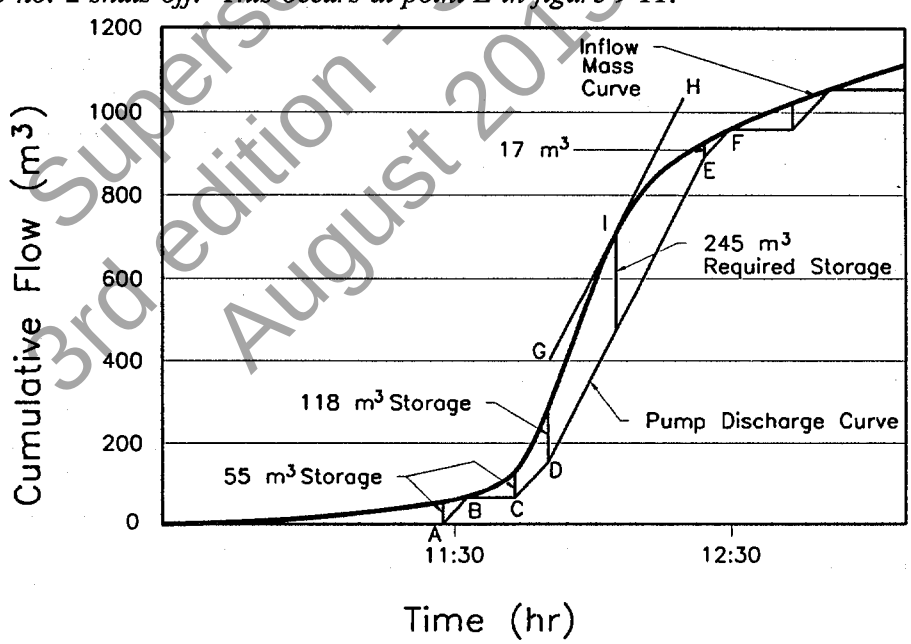


**Figure 9-11. Mass curve routing diagram.**

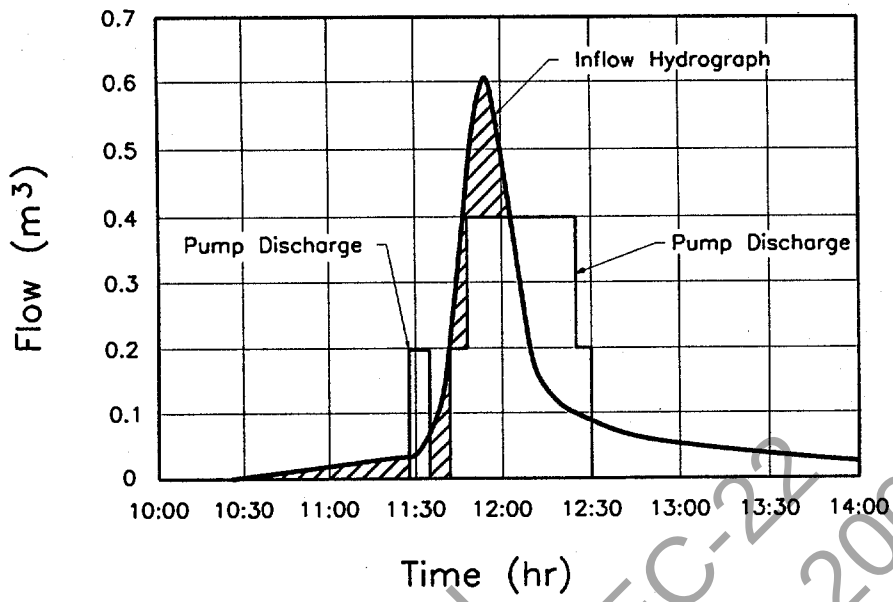


**Figure 9-12. Pump discharge.**

*At point E, the slope of the pump curve is reduced to 0.20 $m^3/s$ (7 $ft^3/s$) representing discharges from pump no. 1 only. Pump no. 1 then shuts off when the pump curve intersects the mass inflow curve at point F.*

*Beyond point F, the pump no. 1 continues to cycle on and off at the appropriate control elevations until all inflow stops.*

*Figure 9-11 can also be used to determine the maximum required storage by drawing a line parallel to the combined pump discharge curve and tangent to the inflow mass curve. This line is shown as line GH. This line intersects the inflow mass curve at point I. The vertical distance from point I to the pump discharge line represents the maximum storage required. The maximum required storage is 245 $m^3$ (8500 $ft^3$).*

*The designer now has a complete design that allows the problem to be studied in-depth. The peak rate of runoff has been reduced from 0.62 $m^3/s$ (22 $ft^3/s$), the inflow hydrograph peak, to 0.40 $m^3/s$ (14 $ft^3/s$), the maximum pump discharge rate. A reduction of 46.5 percent is accomplished by providing for 245 $m^3$ (8,500 $ft^3$) of storage. The available storage at the high water alarm is 250 $m^3$ (8800 $ft^3$) as shown in figure 9-9.*

*To aid the reader in visualizing what is happening during the routing process, the pump discharge curve developed in figure 9-11 is superimposed on the design inflow hydrograph in figure 9-12. In figure 9-12, the shaded area represents storm water that has gone into storage. Pump cycling at the end of the hydrograph is omitted for simplicity.*



## 9.5 DESIGN PROCEDURE

This section presents a systematic design procedure for the design of stormwater pump stations. It incorporates the design criteria discussed in previous sections and yields the required number and capacity

of pumps as well as the wet well and storage dimensions. The final dimensions can be adjusted as required to accommodate non-hydraulic considerations such as maintenance. Though the recommended station is a wet-pit, this procedure can be adapted for use in designing dry-pit stations as well.

Theoretically an infinite number of designs are possible for a given site. Therefore, to initiate design, constraints must be evaluated and a trial design formulated to meet these constraints. Then by routing the inflow hydrograph through the trial pump station its adequacy can be evaluated.

The hydraulic analysis of a pump station involves the interrelationship of 3 components:

- the inflow hydrograph
- the storage capacity of the wet well and the outside storage
- the discharge rate of the pumping system

The inflow hydrograph is determined by the physical factors of the watershed and regional climatological factors. The discharge from the pump station is often controlled by local regulations or physical factors. Therefore, the main objective in pump station design is to store enough inflow (volume of water under the inflow hydrograph) to allow station discharge to meet specified limits. Even if there are no physical limitations to pump station discharge, storage should always be considered since storage permits use of smaller and/or fewer pumps.

The procedure for pump station design is illustrated in the following 11 steps.

Step 1. Inflow to Pump Station

Develop an inflow hydrograph representing the design storm.

Step 2. Estimate Pumping Rate, Volume of Storage, and Number of Pumps

Because of the complex relationship between the variables of pumping rates, storage, and pump on-off settings, a trial and success approach is usually necessary for estimating the pumping rates and storage required for a balanced design. A wide range of combinations will produce an adequate design. The goal is to develop an economic balance between storage volume and pumping capacity.

Some approximation of all three parameters is necessary to produce the first trial design. One approach to estimating storage volume was illustrated in figure 9-5. In this approach, the peak pumping rate is assigned and a horizontal line representing the peak rate is drawn across the top of the hydrograph. The shaded area above the peak pumping rate represents an estimated volume of storage required. This area is measured to give an estimated starting size for the storage facility. Once an estimated storage volume is determined, a storage facility can be estimated. The shape, size, depth, etc., can be established to match the site, and a stage-storage relationship can be developed.

The total pumping rate may be set by storm water management limitations, capacity of the receiving system, the desirable pump size, or available storage. Two pumps would be the minimum number of pumps required. However, as many as five pumps may be needed in the case of a continuously depressed highway situation. Size, and the number of pumps, may be controlled by physical constraints such as portable standby power as discussed in section 9.3.2.

Step 3. Design High Water Level

The highest permissible water level should not be set higher than 0.3 m to 0.6 m (1 ft to 2 ft) below the finished pavement surface at the lowest pavement inlet. The lower the elevation the more conservative the design.

At the design inflow to the pumps, some head loss will occur through the pipes and appurtenances leading to the pump station. Therefore a hydraulic gradient will be established and the maximum permissible water elevation at the station will be the elevation of the hydraulic gradient. This gradient will be very flat for most wet well designs with exterior storage because of the unrestricted flow into the wetwell.

Step 4. Determine Pump Pit Dimensions

Determine the minimum required plan dimensions for the pump station from manufacturer literature or from dimensioning guides such as those provided by the Hydraulic Institute (see figures 9-6.a and 9-6.b). The dimensions are usually determined by locating the selected number of pumps on a floor plan keeping in mind the guidance given in section 9.3.10 for clearances and intake system design. Keep in mind the need for clearances around electrical panels and other associated equipment that will be housed in the pump station building.

Step 5. Stage - Storage Relationship

Routing procedures require that a stage-storage relationship be developed. This is accomplished by calculating the available volume of water for storage at uniform vertical intervals.

Having roughly estimated the volume of storage required and a trial pumping rate by the approximate methods described in the preceding steps, the configuration and elevations of the storage chamber can be initially set. Knowing this geometry, the volume of water stored can be calculated for its respective depth. In addition to the wet-pit, storage will also be provided by the inflow pipes and exterior storage if the elevation of water in the wet-pit is above the inflow invert. If the storage pipe is circular, the volume can be calculated using the ungula of a cone formula (equation 8-9). Figures 9-7 and 9-8 provide an example demonstrating the development of a stage-storage relationship in a circular pipe. A similar procedure would be followed for other storage configurations. Volume in a storage chamber can be calculated below various elevations by formulas depending on the shape of the chamber, as discussed in section 8.4. A stage vs. storage curve can then be plotted and storage below any elevation can readily be obtained.

Step 6. Pump Cycling and Usable Storage

One of the basic parameters addressed initially was that the proper number of pumps must be selected to deliver the design flow (Q). Also, the correct elevations must be chosen to turn each pump on and off. Otherwise, rapid cycling may occur causing undue wear and possible damage to the pumps.

Before discussing pump cycling calculations, operation of a pump station will be described. Initially, the water level in the storage basin will rise at a rate dependent on the rate of the inflow and physical geometry of the storage basin. When the water level reaches the stage designated as the first pump start elevation, the pump will be activated and discharge water from storage at its designated pumping rate. If this rate exceeds the rate of inflow, the water level will drop until it reaches the first

**Table 9-4. Estimation of allowable cycle time.**

| Motor HP | Motor kW | Cycling Time (t), Minutes |
|---|---|---|
| 0 - 15 | 0 - 11 | 5 |
| 20 - 30 | 15 - 22 | 6.5 |
| 35 - 60 | 26 - 45 | 8 |
| 65 - 100 | 49 - 75 | 10 |
| 150 - 200 | 112 - 149 | 13 |

pump stop elevation. When the pump stops, the basin begins to refill and the cycle is repeated. This scenario illustrates that the cycling time will be lengthened by increasing the amount of storage between pump on and off elevations. This volume of storage between first pump on and off elevations is termed usable volume. In theory, the minimum cycle time allowable to reduce wear on the pumps will occur when the inflow to the usable storage volume is one-half the pump capacity. Assuming this condition, cycling time can be related to usable volume as follows:

t = time between starts
t = time to empty + time to fill the usable storage volume ($V_t$)

When the inflow (I) is set to equal one half of the pump capacity ($Q_p$), then:

$$t = \frac{V_t}{Q_p - I} + \frac{V_t}{I} = \frac{V_t}{Q_p - 1/2\ Q_p} + \frac{V_t}{1/2\ Q_p} = \frac{4\ V_t}{Q_p} \qquad (9\text{-}2)$$

where: t = time between starts, s
$V_t$ = usable storage volume, $m^3$ ($ft^3$)
$Q_p$ = pump capacity, $m^3/s$ ($ft^3/s$)
I = inflow, $m^3/s$ ($ft^3/s$) ($I = ½\ Q_p$)

or with t in minutes:

$$t_{min} = \frac{4\ V_t}{Q_p}\left(\frac{1\ min}{60\ sec}\right) = \frac{V_t}{15\ Q_p} \qquad (9\text{-}3)$$

Generally, the minimum allowable cycling time, t, is designated by the pump manufacturer based on electric motor size. In general, the larger the motor, the larger is the starting current required, the larger the damaging heating effect, and the greater the cycling time required. The pump manufacturer should always be consulted for allowable cycling time during the final design phase of project development. However, table 9-4 displays limits that may be used for estimating allowable cycle time during preliminary design.

Knowing the pumping rate and minimum cycling time (in minutes), the minimum necessary allowable storage, V, to achieve this time can be calculated by:

$$V = 15\ Q_p\ t \tag{9-4}$$

Having selected the trial wet-pit and storage dimensions, the pumping range, $\Delta h$, can then be determined. The pumping range represents the vertical height between pump start and pump stop elevations. Usually, the first pump stop elevation is controlled by the minimum recommended bell submergence criteria specified by the pump manufacturer or the minimum water level, H, specified in figures 9-6a and 9-6b. The first pump start elevation will be a distance, $\Delta h$, above H.

When larger volumes of storage are available, the initial pump start elevations can be selected from the stage-storage curve. Since the first pump turned on should typically have the ability to empty the storage facility, it's turn off elevation would be the bottom of the storage basin. The minimum allowable storage would be calculated by the equation $V = 15\ Q_p\ t$. The elevation associated with this volume in the stage-storage curve would be the lowest turn-on elevation that should be allowed for the starting point of the first pump. The second and subsequent pump start elevations will be determined by plotting the pump performance on the mass inflow curve.

This distance between pump starts may be in the range of 0.3 to 1.0 meters (1 to 3 ft) for stations with a small amount of storage and 75 mm to 150 mm (3 to 6 inches) inches for larger storage configurations.

Step 7. Trial Pumps and Pump Station Piping

The designer must select a specific pump in order to establish the size of the discharge piping that will be needed. This is done by using information either previously developed or established. Though the designer will not typically specify the manufacturer or the specific pump, he must study various manufacturers literature in order to establish reasonable relationships between total dynamic head, discharge, efficiency, and energy requirements. This study will also give the designer a good indication of discharge piping needed since pumps that produce the desired results will have a specific discharge pipe size.

Any point on an individual performance curve identifies the performance of a pump for a specific total dynamic head (TDH) that exists in the system. It also identifies the horsepower required and the efficiency of operation of the pump (see figure 9-4). It can be seen that for either an increase or decrease in TDH, the efficiency is reduced as the performance moves away from the eye of the performance curve. It should also be noted that as the TDH increases, the horsepower requirement also increases. The designer must make certain that the motor specified is adequate over the full range of TDH's that will exist. It is desirable that the design point be as close to the eye as possible, or else to the left of the eye rather than to the right of or above it. The range of the pump performance should not extend into the areas where substantially reduced efficiencies exist.

Step 8. Total Dynamic Head

Total Dynamic Head is the sum of the static head, velocity head and various head losses in the pump discharge system due to friction. Knowing the range of water levels in the storage pit and having a trial pump pit design with discharge pipe lengths and diameters and appurtenances such as elbows and valves designated, total dynamic head for the discharge system can be calculated.

To summarize, the total dynamic head (TDH) is equal to:

$$TDH = H_s + H_f + H_v + H_p \tag{9-5}$$

where: $H_s$ = static head or height through which the water must be raised, m (ft)
$H_f$ = loss due to friction in the pipe, m (ft)
$H_v$ = velocity head, m (ft)
$H_p$ = loss due to friction in water passing through the pump valves and fittings and other items, m (ft)

Friction losses can be determined by use of the Darcy Formula. This requires computation of the relative roughness of the pipe, the Reynold's number and the friction factor. The Hydraulic Institute and others have produced line loss tables and charts that make determination of losses quite easy and accurate. The tables and charts have been developed for a variety of pipe materials and are recommended for use in determining line and fitting losses for the discharge side of the pumping system.

Step 9. Pump Design Point

Using methods described in the previous step, the Total Dynamic Head of the outlet system can be calculated for a specific static head and various discharges. These TDH'S are then plotted vs. discharge. This plot is called a system head curve. A system head curve (see figure 9-3) is a graphical representation of total dynamic head plotted against discharge Q for the entire pumping and discharge system. The required design point of a pump can be established after the pump curve is superimposed to give a visual representation of both system and pump. As usually drawn, the system head curve starts from a low point on the Y-ordinate representing the static head at zero discharge. It then rises to the right as the discharge and the friction losses increase. A design point can be selected on the system head curve and a pump can be selected to match that point. The usual pump curve is the reverse of the system head curve so the point of intersection is clearly identifiable. System head curves are often drawn for several different static heads, representing low, design and maximum water levels in the sump. One, two or more pump curves can be plotted over the system head curves and conditions examined. If a change of discharge line size is contemplated, a new system head curve for the changed size (and changed head loss) is easily constructed. In highway design, it is common practice to provide individual discharge lines for each pump. Therefore, the system head curve will not change when additional pumps are added. It should be noted that the pump will always operate at the intersection of the system curve and the pump curve.

Each pump considered will have a unique performance curve that has been developed by the manufacturer. More precisely, a family of curves is shown for each pump, because any pump can be fitted with various size impellers. These performance curves are the basis for the pump curve plotted in the system head curves discussed above. The designer must have specific information on the pumps available in order to be able to specify pumps needed for the pump station. Figure 9-4 demonstrates a typical pump performance curve. A study of a pump performance curve should be made by all designers.

It is necessary that the designer correlate the design point discussed above with an elevation at about the mid-point of the pumping range. By doing this, the pump will work both above and below the TDH for the design point and will thus operate in the best efficiency range.

Step 10. Power Requirements

To select the proper size pump motor, compute the power required to raise the water from its lowest level in the pump pit to its point of discharge. This is best described by analyzing pump efficiency. Pump efficiency is defined as the ratio of pump power output to the power input applied to the pump. The efficiency of the pump is then expressed as:

$$\text{Efficiency, } e = \frac{\text{pump output power (power delivered to the water)}}{\text{power put into the pump shaft (pump motor rating)}}$$

The pump power output can be determined as:

$$P_{kW} = \frac{\gamma\ Q\ H}{1000\ \text{Nm/s /kW}} \qquad \left(P_{hp} = \frac{\gamma\ Q\ H}{550\ \text{ft lb/s /hp}}\right) \tag{9-6}$$

where:
- $P$ = power output from the pump, kW (or hp with the second equation)
- $\gamma$ = specific weight of water, 9800 N/m$^3$ at 15.6°C (62.4 lb/ft$^3$ at 60°F with the second equation)
- $Q$ = pump flow rate, m$^3$/s (ft$^3$/s in second equation)
- $H$ = pump head, m (ft in second equation)
- 1 hp = 0.746 kW = 550 ft-lb/s

Efficiency can be broken down into partial efficiencies - hydraulic, mechanical, etc. The efficiency as described above, however, is a gross efficiency used for the comparison of centrifugal pumps. The designer should study pump performance curves from several manufacturers to determine appropriate efficiency ranges. A minimum acceptable efficiency should be specified by the designer for each performance point specified.

Combining equation 9-6 with the definition of efficiency and changing some of the units, the power put into the pump shaft can be expressed as:

$$kW = \frac{(Q_{m^3/hr})\ (9.8\text{N/liter})\ (H)}{60{,}000\ e} = \frac{(Q_{m^3/hr})\ (H)}{6122\ e} \tag{9-7}$$

$$hp = \frac{(Q_{GPM})\ (8.33\ \text{lb/gal})\ (H)}{33{,}000\ e} = \frac{(Q_{GPM})\ (H)}{3960\ e} \tag{9-8}$$

The designer must recognize that each pump motor has a service factor which defines the range of energy capable of being produced by a given motor. Typical service factors are 1.15 and 1.25. This indicates that a motor can produce 1.15 or 1.25 times the rated KW (horsepower) for short periods of time, but should not be continuously operated at this level. Operating above these limits will burn out the electric motor almost immediately.

Step 11. Mass Curve Routing

The procedures described thus far will provide all the necessary dimensions, cycle times, appurtenances, etc. to complete a preliminary design for the pump station. A flood event can be simulated by routing the design inflow hydrograph through the pump station by methods described in

section 9.4. In this way, the performance of the pump station can be observed at each hydrograph time increment and pump station design evaluated. Then, if necessary, the design can be "fine-tuned".

## 9.6 PHILOSOPHY

Typical pump station design procedures seen in the literature do not represent most highway storm water pump station situations. Many storm water management plans limit the post development discharge to that which existed prior to the development. In order to meet this requirement, it is often necessary to provide storage in the system. Traditional pump design procedures have not considered this storage volume and are thus oriented toward only wet well volumes. These designs are required to pump higher rates with limited storage volumes and thus start-stop and cycling relationships are very critical and can consume considerable design effort.

The mass inflow curve procedure discussed in this document is commonly used when significant storage is provided outside of the wet well. The plotting of the performance curve on the mass inflow diagram gives the designer a good graphical tool for determining storage requirements. The procedure also makes it easy to visualize pump start/stop and run times. In the event that a pump failure should occur, the designer can also evaluate the storage requirement and thus the flooding or inundation that could occur.

# 10. URBAN WATER QUALITY PRACTICES

The objective of this chapter is to provide an overview of urban water quality practices. The purpose of an urban Best Management Practice (BMP) is to mitigate the adverse impacts of development activity. BMPs can be employed for stormwater control benefits and/or pollutant removal capabilities. Several BMP options are available and should be carefully considered based on site-specific conditions and the overall management objectives of the watershed. Regulatory control for water quality practices are driven by National Pollution Discharge Elimination System (NPDES) requirements under such programs as the Clean Water Act Amendments. These requirements were discussed in chapter 2. Water quality practices may not be required depending on local ordinances and regulations in specific project locations.

The discussion of BMPs in this chapter focuses on the water quality benefits of various mitigation measures, including:

- extended detention ponds
- wet ponds
- infiltration trenches
- infiltration basins
- sand filters
- water quality inlets
- vegetative practices
- temporary erosion and sediment control practices

In addition to the pollutant removal capability of each measure, limited design guidance is also provided. For additional detail regarding specific design procedures, appropriate references are recommended.

Brief descriptions of the BMPs follow immediately with more detailed discussion of each BMP in subsequent sections including design criteria and maintenance requirements.

- *Extended Detention Dry Ponds*. Extended detention dry ponds are depressed basins that temporarily store a portion of the stormwater runoff following a storm event. The extended detention time of the stormwater provides an opportunity for urban pollutants carried by the flow to settle out.

- *Wet Ponds*. A wet pond, or retention pond, serves the dual purpose of controlling the volume of stormwater runoff and treating the runoff for pollutant removal. They are designed to store a permanent pool during dry weather. Pollutant removal in wet ponds is accomplished through gravity settling, biological stabilization of solubles, and infiltration.

- *Infiltration Trenches*. Infiltration trenches are shallow excavations which have been backfilled with a coarse stone media. The trench forms an underground reservoir which collects runoff and exfiltrates it to the subsoil. In some cases, the trenches may divert part of the runoff to an outflow facility. Reduction of the peak flow occurs as a result of routing the flow through the basin. The trenches primarily serve as a BMP which provide moderate to high removal of fine particulates and soluble pollutants, but also are employed to reduce peak flows to pre-development levels.

- *Infiltration Basins*. An infiltration basin is an excavated area which impounds stormwater flow and gradually exfiltrates it through the basin floor. They are similar in appearance and construction

to conventional dry ponds. However, the detained runoff is exfiltrated though permeable soils beneath the basin, removing both fine and soluble pollutants.

- *Sand Filters*. Sand filters provide stormwater treatment where first flush runoff is strained through a sand bed before being returned to a stream or channel. Sand filters are generally used in urban areas and are particularly useful for groundwater protection where infiltration into soils is not feasible.

- *Water Quality Inlets*. Water quality inlets are pre-cast storm drain inlets (oil and grit separators) that remove sediment, oil and grease, and large particulates from paved area runoff before it reaches storm drainage systems or infiltration BMPs.

- *Vegetative Practices*. Several types of vegetative BMPs can be applied to convey and filter runoff. They include:
  - grassed swales
  - filter strips
  - wetlands
  - biofiltration swales

  Vegetative practices are non-structural BMPs and are significantly less costly than structural controls. They are commonly used in conjunction with structural BMPs, particularly as a means of pre-treating runoff before it is transferred to a location for retention, detention, storage or discharge. Biofiltration swales are a special type of vegetated channel which takes advantage of filtration, infiltration, adsorption, and biological uptake as runoff flows over and through vegetation.

- *Temporary Erosion and Sediment Control Practices*. Temporary erosion and sediment controls are applied during the construction process, and consist of structural and/or vegetative practices. The control measures are generally removed after final site stabilization unless they prove to be necessary for permanent stabilization. Many of these regulations are based on guidance provided in Volume III of the Highway Drainage Guidelines. [56]

- *Porous Pavement*. Porous pavement provides for quick transport of runoff from a paved surface to an underlying stone reservoir. Sometimes infiltration into the underlying soil is also provided below the reservoir.



## 10.1 GENERAL BMP SELECTION GUIDANCE

Several factors are involved in determining the suitability of a particular BMP. They include physical conditions at the site, the watershed area served, and stormwater and water quality objectives. Table 10-1 presents a matrix that shows site selection criteria for BMPs. [57] A dot indicates that a BMP is feasible. The site selection restrictions for each BMP are also indicated. In terms of water quality benefit, table 10-2 provides a comparative analysis of pollutant removal for various BMP designs. [58] Generally, the BMPs provide high pollutant removal for non-soluble particulate pollutants, such as suspended sediment and trace metals. Much lower rates are achieved for soluble pollutants such as phosphorus and nitrogen.

An important parameter of BMP design is the runoff volume to be treated. Some of the designs in table 10-2 treat the first-flush runoff. This initial runoff carries higher non-point source pollution loads and is often defined as the first 13 mm (0.5 in) of runoff per impervious hectare (acre). [59]

**Table 10-1. BMP selection criteria.** [57]

| Best Management Practices (BMPs) | Area Served (ha) | | | | | Soil Type and Minimum Infiltration Rate (mm/hr) | | | | | | | | | | | Other Restrictions | | | |
|---|---|---|---|---|---|---|---|---|---|---|---|---|---|---|---|---|---|---|---|---|
| | 0-2 | 2-4 | 4-12 | 12-20 | 20+ | Sand 210 A | Loamy Sand 61 A | Sandy Loam 26 B | Loam 13 B | Silt Loam 7 C | Sandy Clay Loam 4 C | Clay Loam 2 D | Silty Clay Loam 1 D | Sandy Clay 1 D | Silty Clay 1 D | Clay 0.5 D | Ground-water Table (m) | Slope (%) | Prox. to Wells (m) | Normal Depth Range (m) |
| Biofiltration | ● | ● | | | | | | ● | ● | ● | ● | ● | ● | | | | 0.3 - 0.6 | < 4 | | |
| Infiltration Trench | ● | ● | | | | ● | ● | ● | ● | | | | | | | | 0.6 - 1.2 | < 20 | > 30 | 0.6 - 1.8 |
| Infiltration Basin | | ● | ● | ● | | ● | ● | ● | ● | | | | | | | | 0.6 - 1.2 | < 20 | > 30 | 0.6 - 1.8 |
| Grassed Swales (with Check Dams) | ● | ● | ● | | | ● | ● | ● | ● | ● | ● | | | | | | 0.3 - 0.6 | < 5 | | 0.15 - 0.6 |
| Filter Strips | ● | | | | | ● | ● | ● | ● | ● | ● | | | | | | 0.3 - 0.6 | < 20 | | |
| Water Quality Inlet | ● | | | | | ● | ● | ● | ● | ● | ● | ● | ● | ● | ● | ● | | | | |
| Detention Ponds | | | ● | ● | ● | ● | ● | ● | ● | ● | ● | ● | ● | ● | | | | | | |
| Retention Ponds | | | ● | ● | ● | | | | ● | ● | ● | ● | ● | ● | ● | ● | | | | |
| Extended Detention/ Retention Ponds | | | ● | ● | ● | ● | ● | ● | ● | ● | ● | ● | ● | ● | | | | | | |
| Detention/Retention With Wetland Bottoms | | | ● | ● | ● | ● | ● | ● | ● | ● | ● | ● | ● | | | | | | | |

**Table 10-2. Pollutant removal comparison for various urban BMP designs.** [58]

| BMP/design | | Pollutant removal efficiency (%) | | | | | | |
|---|---|---|---|---|---|---|---|---|
| | | Suspended Sediment | Total Phosphorus | Total Nitrogen | Oxygen Demand | Trace Metals | Bacteria | Overall Removal Capability |
| Extended detention pond | Design 1 | 60 - 80 | 20 - 40 | 20 - 40 | 20 - 40 | 40 - 60 | Unknown | Moderate |
| | Design 2 | 80 - 100 | 40 - 60 | 20 - 40 | 40 - 60 | 60 - 80 | Unknown | Moderate |
| | Design 3 | 80 - 100 | 60 - 80 | 40 - 60 | 40 - 60 | 60 - 80 | Unknown | High |
| Wet pond | Design 4 | 60 - 80 | 40 - 60 | 20 - 40 | 20 - 40 | 20 - 40 | Unknown | Moderate |
| | Design 5 | 60 - 80 | 40 - 60 | 20 - 40 | 20 - 40 | 60 - 80 | Unknown | Moderate |
| | Design 6 | 80 - 100 | 60 - 80 | 40 - 60 | 40 - 60 | 60 - 80 | Unknown | High |
| Infiltration trench | Design 7 | 60 - 80 | 40 - 60 | 40 - 60 | 60 - 80 | 60 - 80 | 60 - 80 | Moderate |
| | Design 8 | 80 - 100 | 40 - 60 | 40 - 60 | 60 - 80 | 80 - 100 | 60 - 80 | High |
| | Design 9 | 80 - 100 | 60 - 80 | 60 - 80 | 80 - 100 | 80 - 100 | 80 - 100 | High |
| Infiltration basin | Design 7 | 60 - 80 | 40 - 60 | 40 - 60 | 60 - 80 | 40 - 60 | 60 - 80 | Moderate |
| | Design 8 | 80 - 100 | 40 - 60 | 40 - 60 | 60 - 80 | 80 - 100 | 60 - 80 | High |
| | Design 9 | 80 - 100 | 60 - 80 | 60 - 80 | 80 - 100 | 80 - 100 | 80 - 100 | High |
| Porous pavement | Design 7 | 40 - 60 | 60 - 80 | 40 - 60 | 60 - 80 | 40 - 60 | 60 - 80 | Moderate |
| | Design 8 | 80 - 100 | 60 - 80 | 60 - 80 | 60 - 80 | 80 - 100 | 80 - 100 | High |
| | Design 9 | 80 - 100 | 60 - 80 | 60 - 80 | 80 - 100 | 80 - 100 | 80 - 100 | High |
| Water quality inlet | Design 10 | 0 - 20 | Unknown | Unknown | Unknown | Unknown | Unknown | Low |
| Filter strip | Design 11 | 20 - 40 | 0 - 20 | 0 - 20 | 0 - 20 | 20 - 40 | Unknown | Low |
| | Design 12 | 80 - 100 | 40 - 60 | 40 - 60 | 40 - 60 | 80 - 100 | Unknown | Moderate |
| Grassed swale | Design 13 | 0 - 20 | 0 - 20 | 0 - 20 | 0 - 20 | 0 - 20 | Unknown | Low |
| | Design 14 | 20 - 40 | 20 - 40 | 20 - 40 | 20 - 40 | 0 - 20 | Unknown | Low |

**Design 1**: First-flush runoff volume detained for 6-12 h. **Design 2**: Runoff volume produced by 25 mm (1.0 in), detained 24 h. **Design 3**: As in Design 2, but with shallow marsh in bottom stage. **Design 4**: Permanent pool equal to 13 mm (0.5 in) storage per impervious acre. **Design 5**: Permanent pool equal to 2.5 (Vr); where Vr = mean storm runoff. **Design 6**: Permanent pool equal to 4.0 (Vr); approx. 2 weeks retention. **Design 7**: Facility exfiltrates first-flush; 13 mm ( 0.5 in) runoff/imper. acre. **Design 8**: Facility exfiltrates 25-mm (1-in) runoff volume per imper. acre. **Design 9**: Facility exfiltrates all runoff, up to the 2-yr design storm. **Design 10**: 11 $m^3$ (400 $ft^3$) wet storage per impervious acre. **Design 11**: 6-m (20-ft) wide turf strip. **Design 12**: 30-m (100-ft) wide forested strip, with level spreader. **Design 13**: High-slope swales with no check dams. **Design 14**: Low-gradient swales with check dams.

Virginia's Department of Conservation and Recreation adopted stormwater management water quality criteria as it relates to the selection of Best Management Practices. [60] The criteria involve requirements which compel a developer to design a facility that meets either a performance based standard or a technology-based standard. The Virginia standards are presented here as an example of local design standards. Refer to local design standards in the area where the project is being designed to determine applicable project standards.

The Virginia performance criteria is based on required phosphorus removal efficiency (phosphorus is a major concern in the Chesapeake Bay drainage) depending on the size of the contributing drainage area. Those criteria are as follows:

- For drainage areas less than 2 ha (5 ac), BMPs must remove at least 15 percent of the total phosphorus pollutant load after development.
- For drainage areas 2 ha (5 ac) or greater, BMPs must remove at least 40 percent of the total phosphorus pollutant load after development.
- The pre-development load shall be based on an equivalent average cover of 16 percent imperviousness or 0.5 kg/ha/yr (0.45 lbs/ac/yr).

This technology-based criteria involves selection of a particular BMP based on a project's percent impervious area and the size of the contributing drainage area. Table 10-3 summarizes this criteria.

**Table 10-3. Example technology-based criteria matrix for BMP selection.** [60]

| % Impervious of property to control point | Drainage Area | |
|---|---|---|
| | < 2 ha (< 5 ac) | > 2 ha (> 5 ac) |
| 0-21 | TYPE I BMP<br>vegetated filter strip grass swale | TYPE V BMP<br>extended detention retention |
| 22-37 | TYPE II BMP<br>modified grass swale<br>extended detention | TYPE VI BMP<br>extended detention<br>retention |
| 38-66 | TYPE III BMP<br>biofiltration swale<br>modified extended detention<br>constructed wetlands<br>infiltration | TYPE VII BMP<br>modified extended detention<br>constructed wetlands<br>infiltration<br>modified retention |
| 67-100 | TYPE IV BMP<br>any combination of II & III | |

## 10.2 ESTIMATING POLLUTANT LOADS

To predict the impact of highway development activities in a watershed, pollutant loadings can be estimated for both pre- and post-development scenarios. The following methods and models are currently available which employ algorithms for pollutant loading estimation.

### 10.2.1 Simple Method

The Simple method is an aptly named empirical method which is intended for use on sites of less than 2.5 $km^2$ (1 $mi^2$). [58] It assumes an average pollutant concentration is multiplied by the average runoff to yield an average loading estimate. The pollutant export, or loading from a given area can be estimated from the following equation:

$$L = \frac{[P\ R_v\ P_j]\ [C]\ [A]}{98.6} \qquad (10\text{-}1)$$

where:
- $L$ = pollutant load, kg
- $P$ = rainfall depth over the desired time interval, mm
- $R_v$ = runoff coefficient
- $P_j$ = correction factor for storms that produce no flow
- $C$ = flow-weighted mean concentration of the pollutant in urban runoff, mg/L
- $A$ = area of the development site, ha
- 98.6 = unit conversion factor

The rainfall depth value, P, is selected based on the time interval over which loading estimates are desired. Rainfall records for a specific region of the country can be obtained from the National Weather Service (NWS).

The value of $P_j$ is used to account for the percentage of annual rainfall that does not produce measurable runoff. This value adjusts the loading estimation equation to eliminate the portion of annual rainfall that does not produce any direct runoff. Rainfall from minor storm events are stored in surface depressions and do not generate runoff. Based on an analysis of National Urban Runoff Program (NURP) rainfall gage data in the Washington, DC area, it was determined that 10 percent of annual rainfall is so slight that no appreciable runoff is produced. [57] Therefore, $P_j$ should be set to 0.9 for annual and seasonal calculation. $P_j$ is not used (i.e., it is set equal to 1.0) in the analysis of a single storm.

The runoff coefficient, $R_v$, for a site is dependent on the degree of watershed imperviousness, and can be estimated with the following equation:

$$R_v = 0.05 + 0.009\ (I) \qquad (10\text{-}2)$$

where:
- $R_v$ = runoff coefficient
- $I$ = degree of site imperviousness (percent) (This can be readily obtained from site plans.)

Average flow weighted pollutant concentration values (C) are presented in table 10-4 for selected pollutants. The values are derived from a statistical analysis of runoff events in the NURP database. The following example uses the Simple method to estimate pollutant loads.

**Table 10-4. Urban 'C' values for use with the Simple method (mg/L).** [58]

| Pollutant | National Urban Highway Runoff | New Suburban NURP Sites (Wash., DC) | Older Urban Areas (Baltimore) | Central Business District (Wash., DC) | National NURP Study Average | Hardwood Forest (Northern Virginia) |
|---|---|---|---|---|---|---|
| Phosphorus | | | | | | |
| Total | - | 0.26 | 1.08 | - | 0.46 | 0.15 |
| Ortho | - | 0.12 | 0.26 | 1.01 | - | 0.02 |
| Soluble | 0.59 | 0.16 | - | - | 0.16 | 0.04 |
| Organic | - | 0.10 | 0.82 | - | 0.13 | 0.11 |
| Nitrogen | | | | | | |
| Total | - | 2.00 | 13.6 | 2.17 | 3.31 | 0.78 |
| Nitrate | - | 0.48 | 8.9 | 0.84 | 0.96 | 0.17 |
| Ammonia | - | 0.26 | 1.1 | - | - | 0.07 |
| Organic | - | 1.25 | - | - | - | 0.54 |
| TKN | 2.72 | 1.51 | 7.2 | 1.49 | 2.35 | 0.61 |
| COD | 124.0 | 35.6 | 163 | - | 90.8 | > 40.0 |
| BOD (5-day) | - | 5.1 | - | 36 | 11.9 | - |
| Metals | | | | | | |
| Zinc | 0.380 | 0.037 | 0.397 | 0.250 | 0.176 | - |
| Lead | 0.550 | 0.018 | 0.389 | 0.370 | 0.180 | - |
| Copper | - | - | 0.105 | - | 0.047 | - |

TKN = total Kjeldahl nitrogen; COD = chemical oxygen demand; BOD = biochemical oxygen demand.



***Example 10-1***

***Given:*** ***Pre- and post-development parameters are given for a 20 ha (50 ac) development site:***

| *Parameter* | *Pre-development (forest)* | *Post-development (suburban)* |
|---|---|---|
| *P* | *890 mm (35 in)* | *890 mm (35 in)* |
| $P_j$ | *0.9* | *0.9* |
| *% Imp* | *2% (forest)* | *45%* |
| $R_v$ | *0.05 + .009(2) = 0.07* | *0.05 + .009(45) = 0.46* |
| *C (total N)* | *0.78 mg/L* | *2.00 mg/L* |
| *C (total P)* | *0.15 mg/L* | *0.26 mg/L* |
| *C (lead)* | | *0.018 mg/L* |

*Suburban and forest "C" values for nitrogen and phosphorus concentrations are obtained from table 10-4.*

**Find:** *Annual pre- and post-development storm loads and determine the increased nutrient load using equation 10-1. Also determine the post-development lead load.*

**Solution:** *Use equation 10-1*

$$L = P R_v P_j C A / 98.6$$

*Pre-development:*

*Total Nitrogen* = 890 (0.07) (0.9) (0.78) (20) / 98.6
= 8.9 kg/yr

*Total Phosphorus* = 890 (0.07) (0.9) (0.15) (20) / 98.6
= 1.7 kg/yr

*Post-development:*

*Total Nitrogen* = 890 (0.46) (0.9) (2.0) (20) / 98.6
= 149 kg/yr

*Total Phosphorus* = 890 (0.46) (0.9) (0.26) (20 ) / 98.6
= 19 kg/yr

*Increase in Nitrogen load:* 150 - 8.9
= 141.1 kg/yr

*Increase in Phosphorus load:* 20 - 1.7
= 18.3 kg/yr

*Lead* = 890 (0.46) (0.9) (0.018) (20) / 98.6
= 1.3 kg/yr



### 10.2.2 Federal Highway Administration (FHWA) Model

The FHWA has developed a computer model which deals with the characterization of stormwater runoff pollutant loads from highways.[61] Impacts to receiving water, specifically lakes and streams, are predicted from the estimated loadings.

For highway discharges to lakes, the Vollenweider model is employed to predict whether phosphorus discharged by highway stormwater is likely to contribute significantly to eutrophication. Phosphorus concentrations in highway runoff are on the same order of magnitude as those for the principal toxicants (heavy metals), and the concentration levels in lakes that produce adverse effects are roughly comparable. The results of the eutrophication analysis may be useful in a preliminary assessment of the potential problems associated with other pollutants such as metals.

For highway discharges to flowing streams, the impact analysis presented addresses the potential toxic effect on aquatic biota. The available data indicate that toxicants are likely to be the problem pollutants associated with highway runoff. Heavy metals considered (copper, lead, and zinc) are indicated by

available data to be the dominant toxic pollutants contributed by highway stormwater runoff. The procedure employed for this analysis is a probabilistic dilution model developed and applied in the Environmental Protection Agency's (EPA) Nationwide Urban Runoff Program (NURP). It permits the user to compute the magnitude and frequency of occurrence of instream concentration to an acutely toxic value that is specified at this frequency by EPA criteria.

More detail on the estimating procedures can be found in the four-volume FHWA report *"Pollutant Loadings and Impacts from Highway Stormwater Runoff."* [61]

### 10.2.3 Other Computer Models

Several other comprehensive stormwater management models have the ability to generate pollutant loads and the fate and transport of the pollutants. These models are:

- Stormwater Management Model (SWMM)
- Storage, Treatment, Overflow, Runoff-Model (STORM)
- Hydrologic Simulation Program, Fortran (HSPF)
- Virginia Storm model (VAST)

## 10.3 EXTENDED DETENTION DRY PONDS

Extended detention dry ponds are depressed basins that temporarily store a portion of stormwater runoff following a storm event. Water is typically stored for up to 48 hr following a storm by means of a hydraulic control structure to restrict outlet discharge. The extended detention of the stormwater provides an opportunity for urban pollutants carried by the flow to settle out. The water quality benefits of a detention dry pond increase by extending the detention time. Removal of as much as 90 percent of particulates is possible if stormwater is retained for 24 hr or more. However, extended detention only slightly reduces levels of soluble phosphorus and nitrogen found in urban runoff. The extended detention dry ponds normally do not have a permanent water pool between storm events.

Figure 10-1 shows the plan and profile views of an ideal extended detention facility and its components. Extended detention dry pond components include a stabilized low-flow channel, an extended detention control device (riser with hood) and an emergency spillway.

Extended detention dry ponds significantly reduce the frequency of occurrence of erosive floods downstream, depending on the quantity of stormwater detained and the time over which it is released. Extended detention is extremely cost effective, with construction costs seldom more than 10 percent above those reported for conventional dry ponds (conventional dry ponds have far less detention time and are used as a flood control device).

Positive impacts of extended detention dry ponds include creation of local wetland and wildlife habitat, limited protection of downstream aquatic habitat, and recreational use in the infrequently inundated portion of the pond. Negative impacts include occasional nuisance and aesthetic problems in the inundated portion of the pond (e.g., odor, debris, and weeds), moderate to high routine maintenance requirements, and the eventual need for costly sediment removal. Extended detention generally can be applied in most new development situations, and also is an attractive option for retrofitting existing dry and wet ponds.

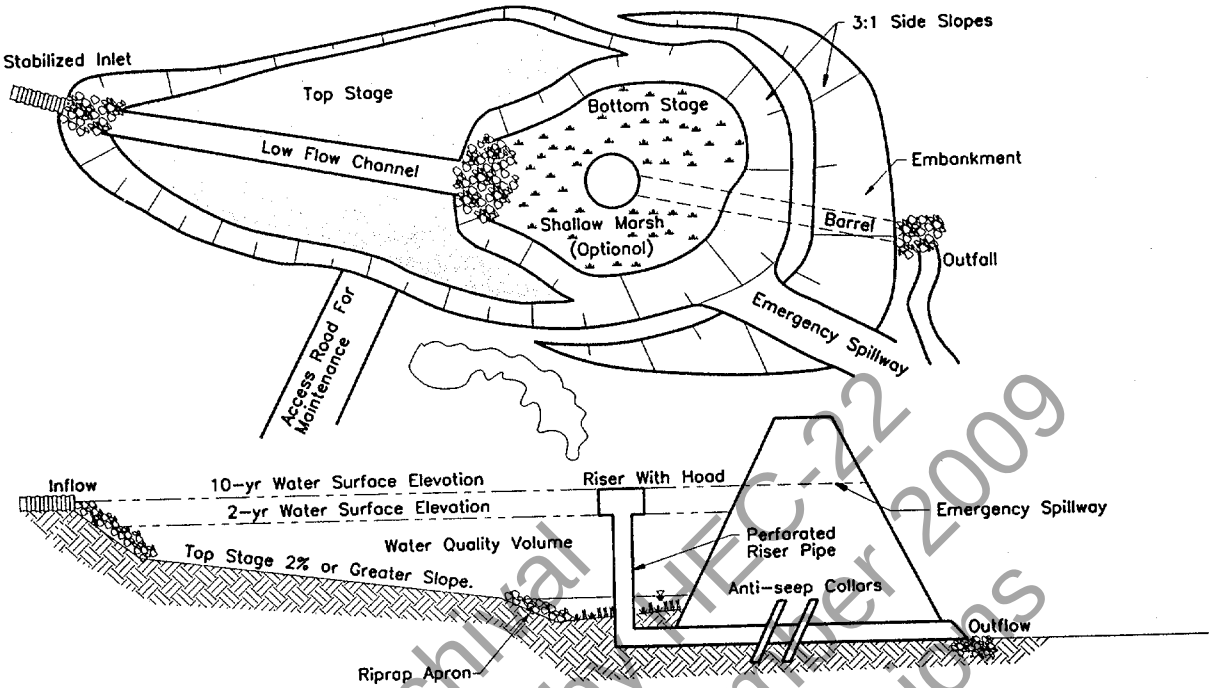


**Figure 10-1. Extended detention pond.**



### 10.3.1 Pollutant Removal Capabilities

All particulate settling can be achieved in an extended detention dry pond; however, removal is typically less than 90 percent. Removal effectiveness for soluble particulates, such as nitrogen, is limited. The addition of a wetlands, intended as a biological filter, at the lower stage of the pond introduces biological processes which significantly increase the removal of soluble compounds.

Several laboratory and field studies have been performed to evaluate the settling behavior of urban pollutants in extended detention dry ponds. Figure 10-2 illustrates the removal rate versus detention time for selected pollutants. The results of these studies provide guidance for estimating detention times which will yield acceptable pollutant removal. Several pollutants have been studied, including sediment, phosphorus, nitrogen, organic matter, lead and zinc. Table 10-5 shows the maximum pollutant removal effectiveness of these constituents based on the Occoquan Watershed Monitoring Laboratory (OWML) experimental settling column data as well as six performance monitoring (field) studies. [62,63]

The experimental studies were conducted with a 48-hr detention time, which represents a practical ceiling at which pollutants will no longer settle. The average detention time in the case studies were relatively low, approximately 6 to 12 hr, resulting in generally low removal rates, and wide variability in the removal rates. Since these field cases did not involve a wetlands or some means of biofiltration at the lower stages of the system, removal estimates for soluble nutrients are expected to be low.

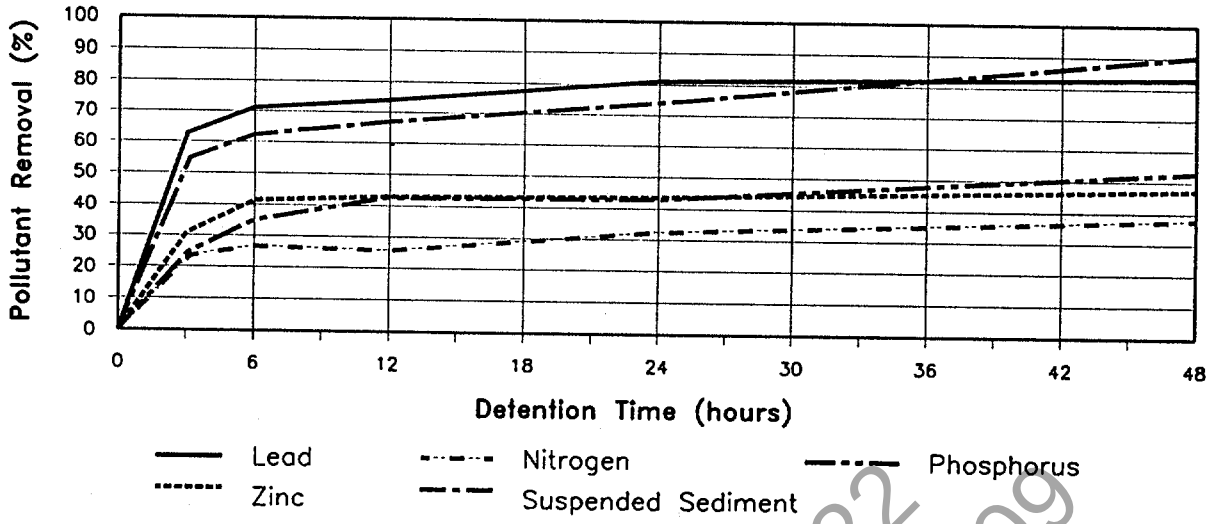


**Figure 10-2. Removal rate versus detention time for selected pollutants.**

The maximum experimental removal efficiencies in table 10-5 represent the theoretical removal potential that can be expected in a properly designed and maintained extended detention dry pond. The field study values in table 10-5 vary widely, reflecting a range of pond design and effectiveness for those ponds which were monitored. Ponds which achieved longer detention times generally provided pollutant removal consistent with the theoretical values.

### 10.3.2 Design Guidance

Extended detention dry ponds are typically employed for drainage areas of 4 ha (10 ac) or more. To achieve the desired water quality benefits, the extended detention dry pond must have the appropriate storage volume and detention time. The basic dimensions of the pond are dependent on the required BMP volume and other site limiting factors such as topography, existing and proposed utilities, depth to bedrock, etc. Guidance related to several factors involved in the design of an extended dry pond are provided below. [58] Additional design guidance can be found in reference 64.

**Table 10-5. Maximum pollutant removal for extended detention dry ponds.** [58]

| Pollutant | Max. Experimental (%) | Field Studies (%) | (AVG) |
|---|---|---|---|
| Sediment | 80 - 90 | 3 - 87 | (44) |
| Total phosphorus | 40 - 50 | 13 - 56 | (27) |
| Total nitrogen | 40 - 52 | 10 - 60 | (31) |
| BOD | 40 - 50 | NA | |
| Lead | 90 | 25 - 66 | (44) |
| Zinc | 50 | 38 - 65 | (23) |

- *Storage*. The structure should store a minimum of 13 mm (1/2 in) of runoff over the catchment area. This is sometimes referred to as the minimum water quality volume (WQV). Local or state stormwater ordinances should be consulted to determine storage requirements for peak flow attenuation. In the absence of any state or local requirements, the 2-yr storm event can be used as a standard for water quantity control. The structure should also safely pass the 100-yr storm.

- *Detention Time*. Detention time is defined as the time duration to pass the entire runoff volume through the outflow device. This is a simplification which assumes that no outflow occurs until the entire runoff volume has collected in the pond. A more precise estimate of detention time can be made using reservoir routing techniques. Detention time should be a minimum of 24 hr; 48-hr detention time would achieve maximum pollutant removal. While most settling occurs within 12 hr in the settling column experiments, it is advisable to provide further detention since several hours may be needed before ideal settling conditions develop in a pond. [58] Desired detention time is achieved through proper design of the outflow hydraulic device.

- *Discharge Control Devices*. Most outlet devices for dry basins are concrete or corrugated metal pipes. The riser orifices have diameters that are generally designed to control different storm events. A typical outlet structure is depicted in figure 10-1.

  *A low-flow orifice* (a vertical conduit) riser can be used to detain stormwater flow for a specific time to allow for settling of pollutants. Orifice designs release the stormwater over a 24-hr to 48-hr period. The orifice equation is presented and discussed in section 8.4.4.1.

  When multiple perforations are employed, $H_o$ should represent the average head for all the openings as discussed in section 8.4.4.1. To prevent clogging of the orifice opening(s), protection in the form of wire mesh (trash rack), layers of gravel, stone, sand, or filter cloth should be provided. Combinations of these materials may be used.

  Both wet and dry ponds are easily adapted to achieve extended detention times. A two-stage design is recommended for dry ponds whereby the top portion of the pond is designed to remain dry most of the time, and a smaller portion near the riser is regularly inundated. The devices used for extended detention are normally attached to the low flow orifice or the riser. Some frequently used methods to extend detention times in dry and wet ponds are shown in figure 10-3 and are described below: [58]

  *Perforated Riser Enclosed in a Gravel Jacket (dry ponds) [figure 10-3a]:* The standard corrugated metal pipe (CMP) riser is perforated with small diameter holes and the normal low-flow orifice is closed. The total diameter of all the holes regulates the outflow to achieve the required detention time for all storm events smaller than the two-year design storm (which is controlled by the weir on top). A gravel jacket and wire mesh screen are used as a filter to prevent clogging. The perforated riser design has some drawbacks. First, hydraulics of flow through vertical risers are not well defined, which makes it difficult to achieve the target detention time. Second, the bottom portion of the gravel jacket may become clogged over time by deposited sediments.

  *Perforated Extension of Low-Flow Orifice, Inlet Controlled (dry ponds) [figure 10-3b]*: This design entails extending and capping the low-flow outfall. Small diameter holes are drilled into the extended PVC pipe, which are protected by 1/3-in wire mesh, and a layer of gravel and stone. An elbow joint is used to extend the pipe above the surface of the pond to facilitate clean-out operations with high velocity jet hoses. This design should only be considered in areas where regular maintenance clean-outs will be performed, as this device is prone to clogging.

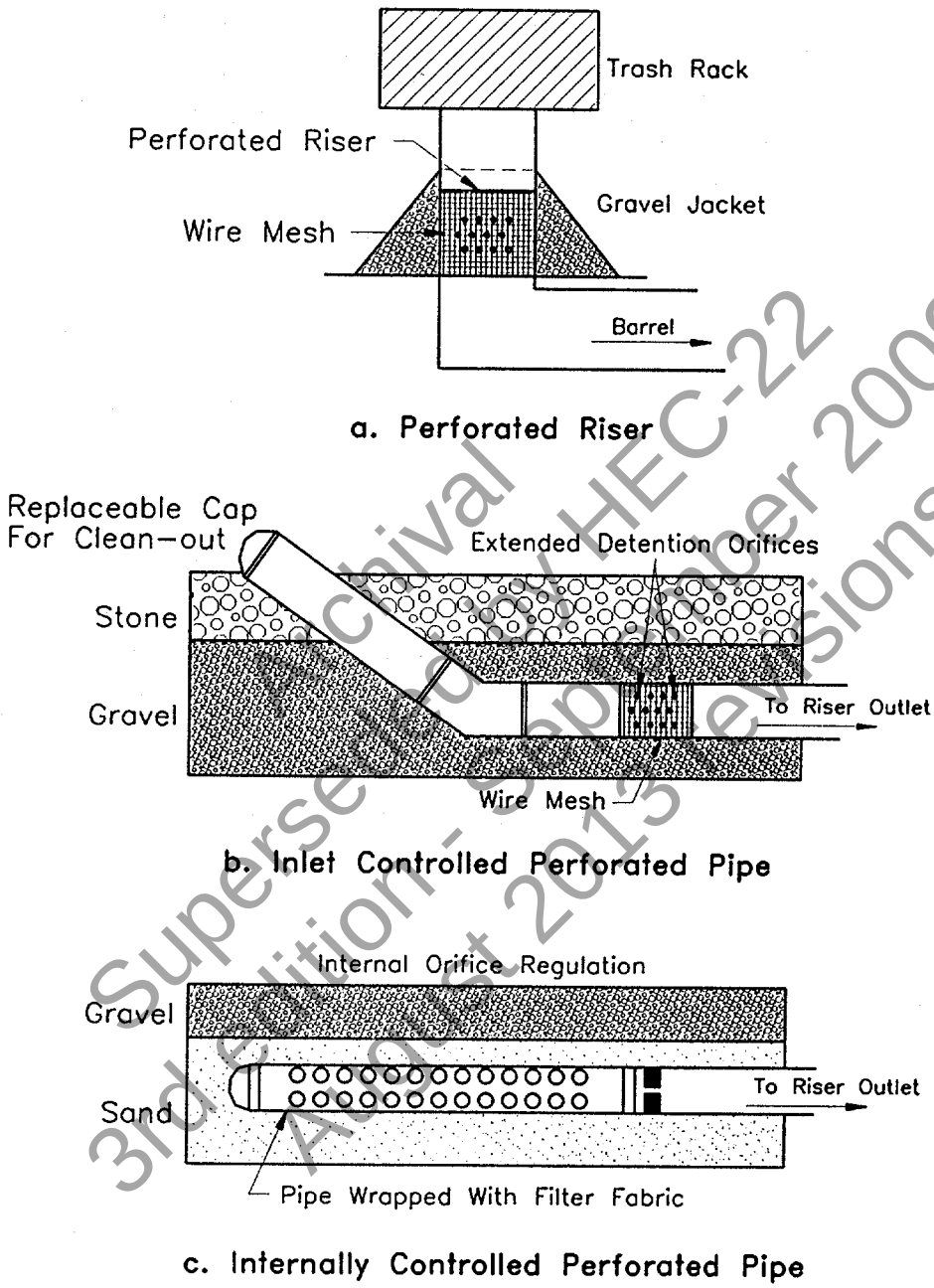




**Figure 10-3. Methods for extending detention times in dry ponds.**

*Perforated Extension of Low-Flow Orifice, Outlet Control (dry ponds) [figure 10-3c]:* Developed by the Baltimore Department of Public Works (DPW), this control device also employs a perforated pipe extended from the low-flow orifice. The major difference between this design and the previous design is that the release rate of the pipe is regulated by an internal flange within the pipe, rather than by holes drilled through the pipe. This provides additional protection from clogging, as a large number of holes can be drilled on the outward side of the flange. In the event that sediment partially clogs the gravel/cloth filters or the outside of the perforated pipe itself, enough water can flow through the remaining holes to satisfy the design release.

- *Channels*. Riprap or other methods of stabilization should be provided within the low-flow channel and at the outflow channel to resist erodible velocities. The transition between the upper and lower stages should contain riprap or other materials or methods to spread flow and prevent scour.

- *Pond Slopes*. Bottom slope in the upper stage area should be designed with a minimum 50 to 1 (h:v) grade. The lower stage should be essentially flat to enhance pollutant removal and uptake. Side slopes should be no steeper than 3 to 1 (h:v) and no flatter than 20 to 1 (h:v).

- *Embankment*. Embankment side slopes should be no steeper than 3 to 1 (h:v). A freeboard of 0.3 m (1 ft) should be provided above the design high-water elevation. At least 10 to 15 percent extra fill should be allowed on the embankment to account for possible subsidence.

- *Basin Landscaping*. Basin landscaping refers to the landscaping plans which accompany a stormwater management basin. Dry ponds should have their perimeters stabilized with some form of vegetation. Establishment of vegetation is critical to the overall pollutant removal performance and aesthetics of the BMP. Special care must be taken to select the proper species, given the frequency and inundation of the basin perimeter. Landscaping information around different inundation zones can be found in reference 58.



### 10.3.3 Maintenance Requirements

Extended detention dry ponds have moderate to high maintenance requirements, depending on the extent to which future maintenance needs are anticipated during the design stage. Responsibilities for both routine and non-routine maintenance tasks need to be clearly understood and enforced. If regular maintenance and inspections are not undertaken, the pond will not achieve its intended purposes. The basic elements of an extended detention dry pond maintenance program are described below. [58]

#### 10.3.3.1 Routine Maintenance

- *Mowing*. The upper stage, side-slopes, embankment, and emergency spillway of an extended detention dry pond must be mowed at least twice a year to discourage woody growth and control weeds.

- *Inspections*. Ponds should be inspected on an annual basis to ensure that the structure operates in the manner originally intended. When possible, inspections should be conducted during wet weather to determine if the pond is meeting the target detention times. In particular, the extended detention control device should be regularly inspected for evidence of clogging, or conversely, for too rapid a release. The upper stage pilot channel, and the flow path to the lower stage should be checked for erosion problems.

- *Debris and Litter Removal.* Debris and litter will accumulate near the extended detention control device and should be removed during regular mowing operations. Particular attention should be paid to floating debris that can eventually clog the control device or riser.

- *Erosion Control.* The pond side-slopes, emergency spillway, and embankment all may periodically suffer from slumping and erosion, although this should not occur often if the soils are properly compacted during construction. Regrading and revegetation may be required to correct the problems. Similarly, the riprap that connects the pilot channel of the upper stage with the lower stage may periodically need to be replaced or repaired.

- *Nuisance Control.* Standing water (not desired in a dry pond) or soggy conditions within the lower stage of an extended detention dry pond can create nuisance conditions for nearby residents. Odors, mosquitos, weeds, and litter are all occasionally perceived to be problems in dry ponds. Most of these problems are generally a sign that regular inspections and maintenance are not being performed (e.g., mowing, debris removal, clearing the extended detention control device).

10.3.3.2 Non-routine Maintenance

- *Structural Repairs and Replacement.* Eventually, the various inlet/outlet and riser works in a pond will deteriorate and must be replaced. Some local public works experts have estimated that corrugated metal pipe (CMP) has a useful life of about 25 years, whereas reinforced concrete barrels and risers may last from 50 to 75 years.

- *Sediment Removal.* When properly designed, dry extended detention dry ponds will accumulate significant quantities of sediment over time. Sediment accumulation is a serious maintenance concern in extended detention dry ponds for several reasons. First, the sediment gradually reduces available stormwater management storage capacity within the pond. Even more storage capacity can be lost if the pond receives large sediment input during the construction phase. Second, unlike wet extended detention dry ponds (which have a permanent pool to conceal deposited sediments), sediment accumulation can make dry extended detention dry ponds very unsightly. Third, and perhaps most importantly, sediment tends to accumulate around the control device of dry extended detention dry ponds. Sediment deposition increases the risk that either the orifice or the filter medium will become clogged, and also gradually reduces storage capacity reserved for pollutant removal in the lower stage. Sediments can also be resuspended if allowed to accumulate over time. For these reasons, accumulated sediment may need to be removed from the lower stage every 5 to 10 years in an extended detention dry pond.

The following example demonstrates the design of an extended detention dry pond.

***Example 10-2***

***Given:*** *An extended detention dry pond is the BMP to be used at a proposed development site. The minimum volume of needed storage is 360 $m^3$ (12,700 $ft^3$) based on 13 mm (½ in) over a site with a drainage area of 2.8 ha (6.9 ac).*

***Find:*** *Determine pond dimensions and design an extended detention outlet riser to achieve desired volume of storage.*

***Solution:*** *The basic dimensions of the pond can be estimated assuming a trapezoidal basin and considering the general topography of the site:*

*Average Length* = *31 m (102 ft)*
*Average Width* = *15 m (50 ft)*
*Average Depth* = *0.78 m (2.6 ft)*

*The storage volume of the proposed pond is 360 $m^3$ (12,700 $ft^3$) at elevation 183 m.*

*The invert of the outlet riser is at elevation 182.30 m. Using a detention time of 40 hr, the average flow through the riser can be estimated:*

$Q$ = volume/time
$Q_{avg}$ = 360 / [(40)(3600)]
= 0.0025 $m^3/s$ (0.09 $ft^3/s$)

*Assuming the barrel of the outlet device is 0.15 m (6 in) in diameter, the average head is:*
[(183 - 182.30) - 0.15] / 2 = 0.28 m (0.92 ft)

*The total area of the perforations can be calculated as follows using equation 8-17 with*

$C_o$ = 0.40 (ragged sharp edge)
$Q$ = $C_o A_p (2gH_o)^{0.5}$
0.0025 = $(0.40) A_p \{(2)(9.81)(0.28)\}^{0.5}$
$A_p$ = $0.0025 / [(0.40)\{(2)(9.81)(0.28)\}^{0.5}]$
$A_p$ = 0.0027 $m^2$ (0.03 $ft^3$)

*Assuming perforations have 13-mm (1/2-in) diameters (area = 0.00013 $m^2$), number of holes = 0.0027/.00013 = 20.8 holes. Round down to be conservative on detention time, and use 20 holes spaced evenly down the riser. The average flow through the riser is then:*

$Q_{avg}$ = $(0.40)(0.00013)(20)[(2)(9.81)(0.28)]^{0.5}$
$Q_{avg}$ = 0.0024 $m^3/s$ (0.08 $ft^3/s$)

*For this outlet design, the detention time in the pond is:*

Time = Volume/Q
= (360 $m^3$/0.0024 $m^3/s$)(1 hr/3600 sec)
= 42 hr ≥ 40 hr, OK

## 10.4 WET PONDS

A wet pond, or retention pond, serves the dual purpose of controlling the volume of stormwater runoff and treating the runoff for pollutant removal. They are designed to store a permanent pool during dry weather. Wet ponds are an attractive BMP alternative because the permanent pool can have aesthetic value and can be used for recreational purposes and as an emergency water supply. Overflow from the pond is released by hydraulic outlet devices designed to discharge flows at various elevations and peak flow rates. A plan and profile view of a typical wet pond and its components is shown in figure 10-4.

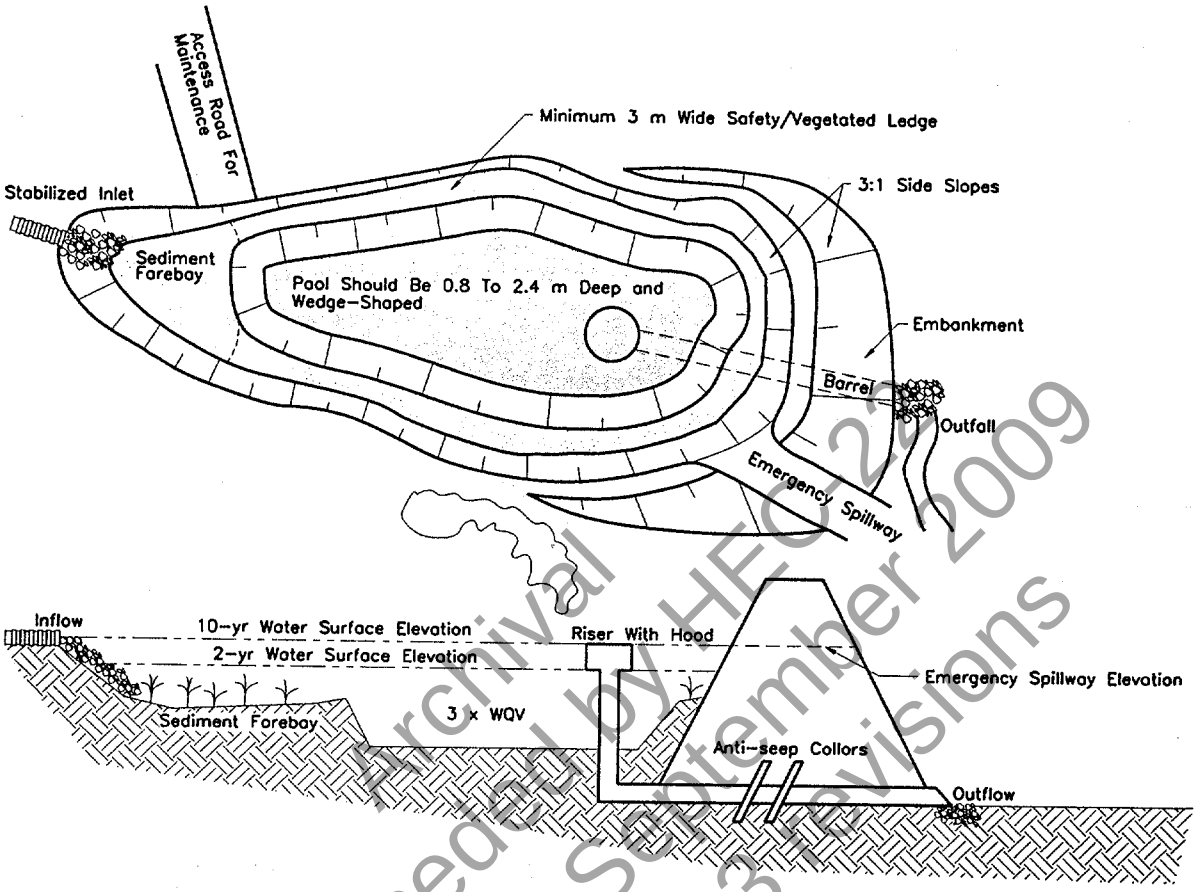


**Figure 10-4. Typical wet pond schematic.**



Wet ponds are an extremely effective water quality BMP. If properly sized and maintained, wet ponds can achieve a high removal rate of sediment, BOD, organic nutrients and trace metals. Biological processes within the pond also remove soluble nutrients (nitrate and ortho-phosphorus) that contribute to nutrient enrichment (eutrophication). Wet ponds are most cost effective in larger, more intensively developed sites. Positive impacts of wet ponds include: creation of local wildlife habitat; higher property values; recreation; and landscape amenities. Negative impacts include: possible upstream and downstream habitat degradation; potential safety hazards; occasional nuisance problems (e.g., odor, algae, and debris); and the eventual need for costly sediment removal.

### 10.4.1 Pollutant Removal Capabilities

Research indicates that wet ponds are more effective at removing pollutants than extended detention dry ponds because they provide for biological processes. [66] Pollutant removal in wet ponds is accomplished through gravity settling, biological stabilization of solubles, and infiltration. Properly designed wet ponds effectively dilute and store "first flush" runoff which typically contains high pollutant concentrations.

Nutrient removal efficiencies of wet ponds have been shown to vary directly with the ratio of the volume of the permanent pool to the volume of runoff produced from the mean storm. To achieve high pollutant removal efficiencies, the volume of the permanent pool should be at least three times the water quality volume (the volume to be treated which is usually assumed to be the first flush or 13 mm of runoff per impervious hectare). Using this ratio, the following removal efficiencies may be expected: [66]

| | |
|---|---|
| Sediment | 90 percent |
| Total Phosphorus | 65 percent |
| Total Nitrogen | 48 percent |

Site-specific monitoring studies have been performed to determine pollutant removal rates. Table 10-6 shows the removal rate ranges and averages for several non-soluble and soluble pollutants for 20 monitoring studies: [67]

### 10.4.2 Design Guidance

Wet ponds are typically employed for drainage areas of 4 ha (10 ac) or more. To achieve the desired water quality benefits, the permanent pool in the wet pond must be at least three times the water quality volume. The basic dimensions of the pond are dependent on the required BMP volume and other site limiting factors such as topography, existing and proposed utilities, depth to bedrock, etc. Other factors such as a sediment forebay and a vegetated perimeter increase the pollutant removal effectiveness of the pond. Guidance related to several factors involved in the design of a wet pond are provided below. [58,68] Additional design guidance can be found in reference 64.

- *Volume*. Pool volume should be at least three times the water quality volume. [69] The water quality volume is typically determined by applying 13 mm (0.5 in) of runoff over the catchment area. Adequate volume protects against drought conditions. Local or state stormwater ordinances should be consulted to determine storage requirements for peak flow attenuation.

- *Shape*. The water quality benefits of the BMP can be "short-circuited" when incoming runoff passes through the pond without displacing the old water. This is a frequently cited problem in wet pond design. Short-circuiting can be largely prevented by maximizing the distance between inlet(s) and outlet. For this reason, many local stormwater management ordinances specify minimum length to width ratios of 3:1 or greater. If local topography makes the excavation of a long, narrow pond impossible, correctly placed baffles can lengthen the flow-path between the inlet and outlet.

- *Benches, Ledges, and Forebays*. Benches are shallow shelves along the permanent pool perimeter, usually less than 1 m (3 ft) deep. The ledge width is at least 3 m (10 ft). The shelf area design provides a platform for aquatic plants and a safety zone. The flow depth over the shelf for aquatic plants should be shallow, approximately 0.3 to 0.6 m (1 to 2 ft), to promote growth of emergent species. The slope leading to the edge should be no steeper than 3 to 1 (h:v) and not flatter than 20 to 1 (h:v). A design with a settling area increases the pond's ability to remove sediment. The design should include a method to either reduce velocities at the inlet (such as a flat bench) or an entrance stilling basin to allow sediment to drop out before entering the main pool.

- *Depth*. The permanent pool must be deep enough to satisfy volume requirements. If it is too shallow (less than 1 m), the pool becomes overcrowded with vegetation. Typical average pond depths are 0.9 to 2.4 m (3 to 8 ft). Deeper pools may thermally stratify causing eutrophic effects.

**Table 10-6. Actual pollutant removal rates for wet ponds.** [67]

| Pollutant | Removal Rates (%) | |
|---|---|---|
| | Range | (Mean) |
| Sediment | 32 - 91 | (74) |
| Total phosphorus | 12 - 91 | (49) |
| Total nitrogen | 6 - 85 | (34) |
| Lead | 23 - 95 | (69) |
| Zinc | 13 - 96 | (59) |

- *Hydraulic Devices*. An outlet device, typically a riser-pipe barrel system, should be designed to release runoff in excess of the water quality volume and to control storm peaks. The outlet device should still function properly when partial clogging occurs. Plans should provide details on all culverts, risers, and spillways. Calculations should depict inflow, storage, and outflow characteristics of the design. Some frequently used designs or approaches for extending detention times in wet ponds are shown in figure 10-5 and are described below. [58]

  *Slotted Standpipe from Low-Flow Orifice, Inlet Control (dry pond, shallow wet pond, or shallow marsh) [figure 10-5a].* In this Baltimore DPW design, an "L"-shaped PVC pipe is attached to the low-flow orifice. An orifice plate is located within the PVC pipe which internally controls the release rate. Slots or perforations are all spaced vertically above the orifice plate, so that sediment deposited around the standpipe will not impede the supply of water to the orifice plate.

  *Negatively Sloped Pipe from River (wet ponds or shallow marshes) [figure 10-5b].* This design was developed in Montgomery County, Maryland to allow for extended detention in wet ponds. The release rate is governed merely by the size of the pipe. The risk of clogging is largely eliminated by locating the opening of the pipe at least 0.3 m (1 ft) below the water surface where it is away from floatable debris. Also, the negative slope of the pipe reduces the chance that debris will be pulled into the opening by suction. As a final defense against clogging, the orifice can be protected by wire mesh placed at an appropriate distance from the orifice to prevent clogging of the mesh.

  *Hooded Riser (wet ponds) [figure 10-5c].* In this design, the extended detention orifice is located on the face of the riser near the top of the permanent pool elevation. The orifice is protected by wire mesh and a hood, which prevents floatable debris from clogging the orifice.

- *Basin Landscaping*. Wet ponds should have their perimeters stabilized with some form of vegetation. Establishment of vegetation is critical to the overall pollutant removal performance and aesthetics of the BMP. Special care must be taken to select the proper species, given the frequency and inundation of the basin perimeter. Landscaping information around different inundation zones can be found in reference 58.

*Other considerations.*

- *Outfall Protection*. The outfall channel should be designed to prevent erosion from occurring. The channel may be protected or the velocities can be reduced to nonerosive levels.

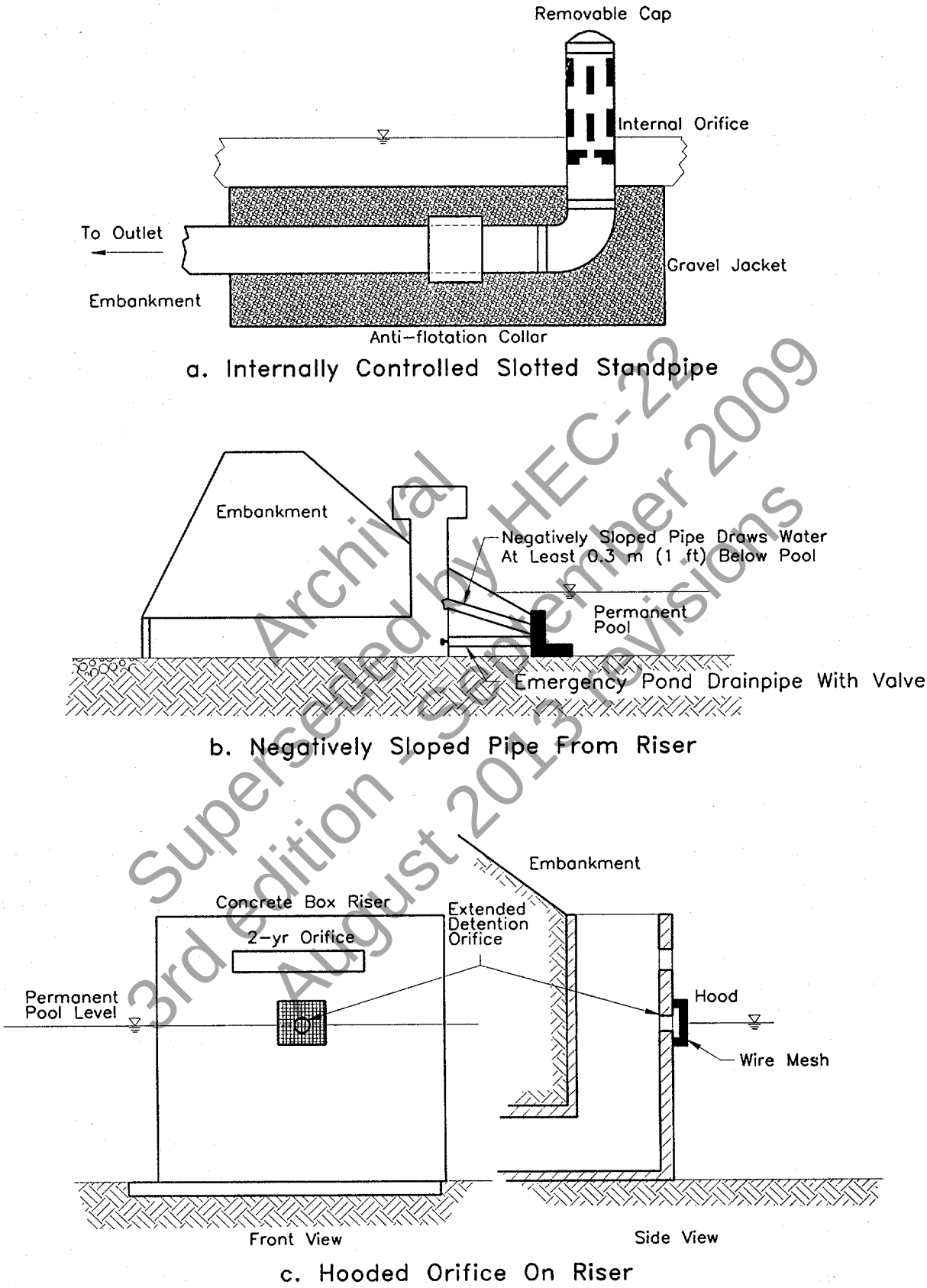




**Figure 10-5. Designs or approaches for extending detention times in wet ponds.**

- *Pond Buffer*. Wet ponds should be surrounded by a buffer strip at least 7.5-m (25 ft) wide. The buffer strip should be planted with water-tolerant, low-maintenance grasses, shrubs, and trees.

- *Vegetation*. When feasible, it is suggested that an artificial marsh fringe be established near the inlet or forebay and around at least 50 percent of the pond perimeter.

- *Embankment*. At least 10 to 15 percent extra fill height should be allowed on the embankment to account for possible subsidence. (Note: This may not be necessary if geotechnical work is properly done.) The embankment should have at least 0.3 m (1 ft) of freeboard above emergency spillway. Anti-seep collars should be used to prevent seepage around the barrel. The embankment should be graded to allow access, and mowed at least twice annually to prevent woody growth.

- *Site Access*. Adequate access from public or private right of way to the pond should be provided. The access roadway should have a top width at least 3-m (10-ft) wide, and have stabilized side slopes of 5:1 or less to provide for passage of heavy equipment. The access road should not cross the emergency spillway, unless it is properly stabilized. The pool design can include devices to withdraw water for fire fighting. These hydrant devices should include mechanisms to resist intake clogging. Local fire codes should be taken into account when designing the device.



### 10.4.3 Maintenance Considerations

A clear requirement for wet ponds is that a firm institutional commitment be made to carry out both routine and non-routine maintenance tasks. The nature of wet pond maintenance requirements are outlined below, along with design tips that can help to reduce the maintenance burden.

*Routine Maintenance.*

- *Mowing*. The side-slopes, embankment, and emergency spillway of a wet pond must be mowed at least twice a year to prevent woody growth and control weeds.

- *Inspections*. Wet ponds need to be inspected on an annual basis to ensure that the structure operates in the manner originally intended. When possible, inspections should be conducted during wet weather to determine if the pond is functioning properly. There are many functions and characteristics of wet ponds which should be inspected. The embankment should be checked for subsidence, erosion, leakage, cracking, and tree growth. The condition of the emergency spillway should be checked. The inlet, barrel, and outlet should be inspected for clogging. The adequacy of upstream and downstream channel erosion protection measures should be checked. Stability of the sideslopes should be checked. Modifications to the pond structure and contributing watershed should be evaluated. The inspections should be carried out with as-built pond plans in hand.

- *Debris and Litter Removal*. As part of periodic mowing operations, debris and litter should be removed from the surface of the pond. Particular attention should be paid to floatable debris around the riser, and the outlet should be checked for possible clogging.

- *Erosion Control*. The pond side-slopes, emergency spillway, and embankment all may periodically suffer from slumping and erosion. Corrective measures such as regrading and revegetation may be necessary. Similarly, the riprap protecting the channel near the outlet may need to be repaired or replaced.

- *Nuisance Control*. Most public agencies surveyed indicate that control of insects, weeds, odors, and algae may be needed in some ponds. Nuisance control is probably the most frequent maintenance item demanded by local residents. If the ponds are properly sized and vegetated, these problems should be rare in wet ponds except under extremely dry weather conditions. Biological control of algae and mosquitos using fish such as fathead minnows is preferable to chemical applications.

*Non-routine maintenance.*

- *Structural Repairs and Replacement*. Eventually, the various inlet/outlet and riser works in a wet pond will deteriorate and must be replaced. The actual life of these components depends on the type of soil, pH of runoff, and other factors. Polyvinyl chloride (PVC) pipe is a corrosion resistant alternative to metal and concrete pipes. Tests should be conducted to determine which materials are best suited to the site conditions. Some ponds that suffer from excessive and chronic drawdowns may have problems with leakage or seepage of water through the embankment. Corrective measures can be difficult, but can be avoided if the embankment has been compacted, and if anti-seep collars are used around the barrel.

- *Sediment Removal*. If properly designed, wet ponds will eventually accumulate enough sediment to significantly reduce storage capacity of the permanent pool. As might be expected, the accumulated sediment can reduce both the appearance and pollutant removal performance of the pond. The best available estimate is that approximately one percent of the storage volume capacity associated with the two-year design storm can be lost annually. Smaller, stabilized watersheds accumulate sediment at lower rates, while larger watersheds with unprotected channels or ongoing construction fill in more rapidly. The sediment which accumulates at the bottom of the pond should be removed every 5 to 10 yr. Testing may be necessary to determine if the sediment is a hazardous material, particularly if the runoff contains high concentrations of heavy metals. If the sediment is classified as a hazardous material, a Corps of Engineers Section 404 permit may be needed to dispose of the dredged material. If vegetation is present in the pond, it should be harvested to prevent the basin from filling with decaying organic matter.

Safety measures should be taken into consideration when designing a wet pond. Measures to reduce the chance of accidents or drowning include fencing around the pond, building safety benches, and using floatation equipment or devices.



## 10.5 INFILTRATION TRENCHES

Infiltration trenches are shallow excavations which have been backfilled with a coarse stone media. The trench forms an underground reservoir which collects runoff and either exfiltrates it to the subsoil or diverts it to an outflow facility. The trenches primarily serve as a BMP which provide moderate to high removal of fine particulates and soluble pollutants, but also are employed to reduce peak flows to pre-development levels. Use of an infiltration trench is feasible only when soils are permeable and the seasonal groundwater table is below the bottom of the trench. An example of surface trench design is shown in figure 10-6. [58] This design is frequently used for highway median strips and parking lot "islands" (depressions between two lots or adjacent sides of one lot). The components of an infiltration trench can include: backfill material; observation wells; sand filter; overflow pipes, emergency overflow berms; and a vegetated buffer strip.

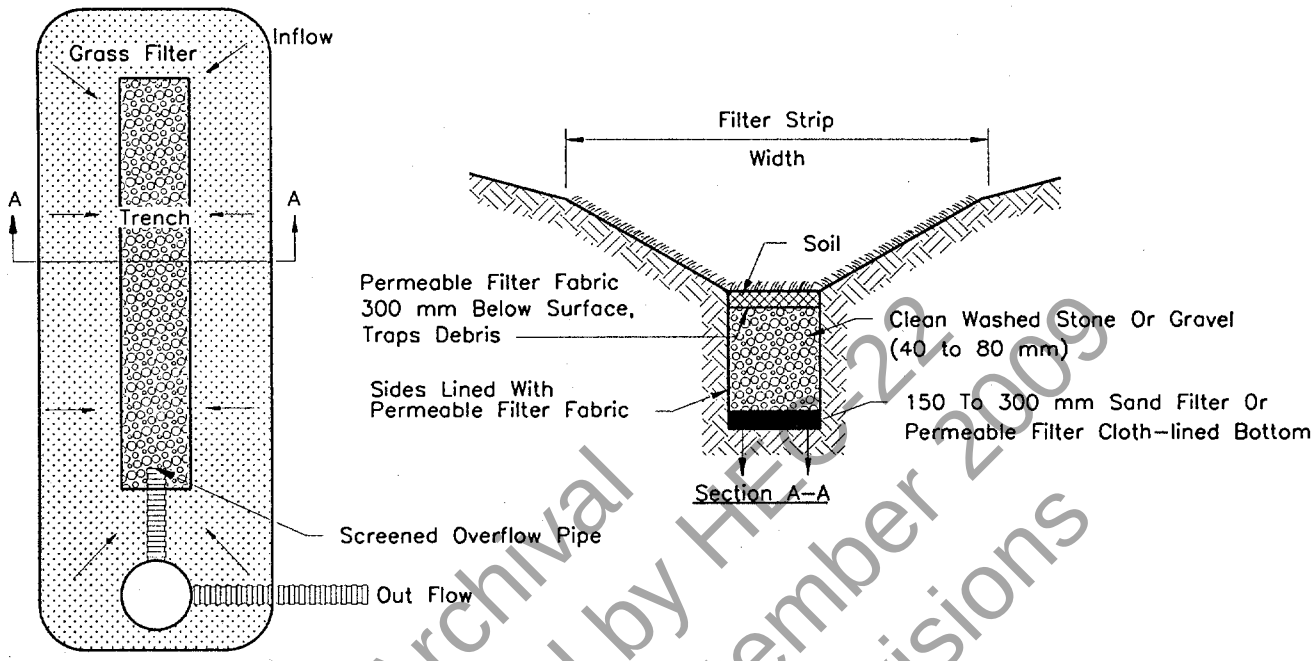


**Figure 10-6. Median strip trench design.**



Advantages of infiltration trenches are that they preserve the natural groundwater recharge capabilities of the site. Infiltration trenches are also relatively easy to fit into the margins, perimeters, and other unutilized areas of a development site. This is one of the few BMPs offering pollutant removal on small sites or infill developments.

The disadvantages associated with infiltration trenches include practical difficulties in keeping sediment out of the structure during site construction (particularly if development occurs in phases), the need for careful construction of the trench and regular maintenance thereafter, and a possible risk of groundwater contamination.

There are three basic trench systems: complete exfiltration, partial exfiltration, and water quality exfiltration systems. These are described below.

- *Complete Exfiltration System*. In this design, water can exit the trench only by passing through the stone reservoir and into the underlying soils (i.e., there is no positive pipe outlet from the trench). As a result, the stone reservoir must be large enough to accommodate the entire expected design runoff volume, less any runoff volume lost via exfiltration during the storm. The complete exfiltration system provides total peak discharge, volume, and water quality control for all rainfall events less than or equal to the design storm. A rudimentary overflow channel, such as a shallow berm or dike, may be needed to handle any excess runoff from storms greater than the design storm.

- *Partial Exfiltration System.* It may not always be feasible or prudent to rely completely on exfiltration to dispose of runoff. For example, there may be concerns about the long-term permeability of the underlying soils, downstream seepage, or clogging at the interface between the filter fabric and subsoil.

  Many current designs improperly use a perforated underdrain at the bottom of the trench to collect runoff and direct it to a central outlet. Since trenches are narrow, the collection efficiency of the underdrain is very high. As a result, these designs may only act as a short-term underground detention system. The low exfiltration rates and short residence times, together, result in poor pollutant removal and hydrologic control.

  Performance of partial exfiltration systems can be improved during smaller storms when perforated underdrains are not used. Instead, a perforated pipe can be inserted near the top of the trench. Runoff then will not exit the trench until it rises to the level of the outlet pipe. Storms with less volume than the design storm may never fill the trench to this level, and will be subject to complete exfiltration.

  In either design, the passage of the inflow hydrograph through the trench can be modeled with hydrograph routing procedures to determine the appropriate sizing of the trench. Due to storage and timing effects, partial exfiltration trenches will be smaller in size than full exfiltration trenches serving the same site.

- *Water Quality Exfiltration Systems.* The storage volume of a water quality trench is set to receive only the first flush of runoff volume during a storm. The first flush volume has been variously defined as: (1) 13 mm (0.5 in) of runoff per impervious ha (ac); (2) 13 mm (0.5 in) of runoff per hectare (acre); and (3) the volume of runoff produced by a 25-mm (1-in) storm. The remaining runoff volume is not treated by the trench, and is conveyed to a conventional detention or retention facility downstream.

  While water quality exfiltration systems do not satisfy stormwater storage requirements, they may result in smaller, less costly facilities downstream. The smaller size and area requirements of water quality exfiltration systems allows considerable flexibility in their placement within a development site, an important factor for "tight" sites. Additionally, if for some reason the water quality trench fails, stormwater may still be adequately controlled by a downstream stormwater management (SWM) facility.



### 10.5.1 Pollutant Removal Capabilities

Pollutant removal mechanisms in a trench system include adsorption, filtering, and microbial decomposition below the trench. Pre-treatment areas, such as grassed swales leading to the trench are typically used to remove coarse particulate contaminants to avoid clogging. Research on rapid infiltration land wastewater treatment systems provides a basis for estimating performance of infiltration trenches. Based on these studies, the long-term removal rates for different urban pollutants which can be expected for full and partial exfiltration systems are estimated. Water quality trench removal efficiencies are based on modeling and field studies of the first flush effect. Table 10-7 summarizes the pollutant removal efficiencies for the three trench systems. [58]

**Table 10-7. Removal efficiencies for infiltration trench systems.**

| Pollutant | Removal efficiency (%) | |
|---|---|---|
| | Complete & Partial Exfiltration | Water Quality |
| Sediment | 99 | 75 - 90 |
| Total phosphorus | 65 - 75 | 50 - 70 |
| Total nitrogen | 60 - 70 | 45 - 60 |
| Trace metals | 95 - 99 | 75 - 90 |
| BOD | 90 | 70 - 80 |
| Bacteria | 98 | 75 - 90 |



### 10.5.2 Design Guidance

Infiltration trenches are suitable for drainage areas up to 2 ha (5 ac). Complete exfiltration trenches have a stone reservoir large enough to store the entire design storm runoff volume and exfiltrate all runoff to surrounding soils. Partial exfiltration trenches consist of a short-term underground detention facility that is most effective during smaller storms. Water quality trenches serve only to accommodate first flush volumes which is 13 mm (0.5 in) runoff per impervious contributing area.

Trench designs can be further distinguished as to whether they are located on the surface or below ground. Surface trenches accept diffuse runoff (sheet flow) directly from adjacent areas, after it has been filtered through a grass buffer. Underground trenches can accept more concentrated runoff (from pipes and storm drains), but require the installation of special inlets to prevent coarse sediment and oil and grease from clogging the stone reservoir.

General design criteria for infiltration trenches are presented below: [58]

- *Storage Volume*. The storage volume of an infiltration trench can be estimated by the following equation:

$$V = n\,w\,L\,d \qquad (10\text{-}3)$$

where: $V$ = storage volume, $m^3$ ($ft^3$)
$n$ = porosity of the backfilled material (dimensionless: void volume/total volume)
$L$ = trench length, m (ft)
$d$ = trench depth, m (ft)
$w$ = trench width, m (ft)

The facility should infiltrate the water quality volume within 72 hours. [68] Infiltration trenches generally serve small drainage areas and are usually not designed to control peak storm flows. Once the storage volume has been determined, the dimensions of the facility can be estimated.

- *Groundwater Protection.* Filter cloth should surround all sides of the trench to prevent soil contamination and to protect the groundwater. The observation well is a perforated 100- to 150-mm (4- to 6-in) PVC pipe located at the center of the infiltration trench. The well is used to inspect the facility to monitor sediment accumulation and to determine when trench de-watering is necessary. The top end of the well should be secured with a wellcap and lock.

- *Overflow Berm.* A 50- to 75-mm (2- to 3-in) emergency overflow berm on the downstream side of the trench serves a twofold purpose. First, it detains surface runoff and allows it to pond and infiltrate to the trench. The berm also promotes uniform sheet flow for runoff overflow.

- *Buffer Strip.* The trench should have a vegetated buffer strip on all sides over which surface flow reaches the trench. The strip acts as a pretreatment filtration device to remove sediments before runoff enters the trench.

- *Trench Location.* Trenches should be between 0.6 and 3.0 m (2 and 10 ft) deep. Underlying soils must provide infiltration rates greater than 13 mm (0.5 in) per hour. The trench bottom should be situated a minimum of 1.2 m (4 ft) above the seasonal high water table. Trenches can be located at the surface or below ground. For trenches located below the ground surface, a minimum of 0.3 m (1 ft) of soil cover should be provided for the establishment of vegetation. The trench should be located at least 30 m (100 ft) from water supply wells. In all instances, trenches should be 3 m (10 ft) from utilities. The minimum and maximum allowable trench depths (based on minimum and maximum detention times of 48 and 72 hours, respectively) can be computed from the following equation:

$$d = \frac{f_c \, T_s}{1000 \, V_r} \qquad (10\text{-}4)$$

where: $d$ = trench depth, m (m)
$f_c$ = infiltration rate, mm/hr (in/hr)
$T_s$ = storage time, hr
$V_r$ = voids ratio

- *Backfill Material.* The backfill material in the trench should have a $D_{50}$ sized between 40 and 80 mm (1.5 and 3 in) and clay content should be limited to less than 30 percent. The porosity of the material should be between 0.3 and 0.4.

- *Surface Area of the Trench Bottom.* Pollutant removal in a trench can be improved by increasing the surface area of the trench bottom. This is done by adjusting the geometry to make the trench shallow and broad, rather than deep and narrow. Greater bottom surface area increases exfiltration rates and provides more area and depth for soil filtering. In addition, broader trench bottoms reduce the risk of clogging at the soil/filter cloth interface by spreading exfiltration over a wider area.

- *Soils.* Trenches are not a feasible option for sites with "D" soils (i.e., infiltration rates of less than 7 mm (0.27 in) per hour), or any soils with a clay content greater than 30 percent (as determined from the SCS soils textural triangle). Silt loams and sandy clay loams ("C" soils) provide marginal infiltration rates, and should probably only be considered for partial exfiltration systems (see table 10-8). Soils with a combined silt/clay percentage greater than 40 percent by weight are susceptible

**Table 10-8. Soil limitations for infiltration trenches.** [58]

| Soil Texture | Minimum Infiltration Rate (mm/hr) | SCS Soil Group | Maximum depth of trench (m) based on following detention times | |
|---|---|---|---|---|
| | | | 48 hr | 72 hr |
| Sand | 210 | A | 25.20 | 37.82 |
| Loamy Sand | 61 | A | 7.37 | 11.02 |
| Sandy Loam | 26 | B | 3.10 | 4.65 |
| Loam | 13 | B | 1.98 | 2.36 |
| Silt Loam | 7 | B | 0.81 | 1.24 |
| Sandy Clay | 4 | C | 0.51 | 0.79 |
| Clay Loam | 2 | C | 0.28 | 0.41 |
| Silty Clay Loam | 1 | D | 0.18 | 0.28 |
| Sandy Clay | 1 | D | 0.15 | 0.23 |
| Silty Clay | 1 | D | 0.15 | 0.18 |
| Clay | 0.5 | D | 0.05 | 0.10 |



to frost-heave, and are not good candidates for infiltration trench applications. No matter what soil type is present, the stone subgrade must extend below the frost-line. Trenches are not suitable over fill soils that form an unstable subgrade and are prone to slope failure.

- *Slope*. An underground trench is not feasible on sites with a slope greater than 20 percent. Surface trenches are not recommended when contributing slopes are greater than five percent. The slope of the bottom of the trench should be near zero to evenly distribute exfiltration, unless the design includes a positive outlet.

- *Depth to Bedrock*. At least 1.2 m (4 ft) of clearance will be needed between the bottom of the stone reservoir and the bedrock level. Depth to rock can be estimated from local soil maps but should always be confirmed by several soil test borings.

### 10.5.3 Maintenance Considerations

Infiltration trenches generally do not require a great deal of maintenance, but do tend to be neglected because they are more inconspicuous than most other BMPs. DOT maintenance forces need to be educated about the function and maintenance requirements of trenches to ensure maintenance requirements are met. The following are some routine maintenance requirements for infiltration trenches:

- *Inspection*. The trench should be inspected several times in the first few months of operation, and then annually thereafter. Inspections should also be conducted after large storms to check for surface ponding that might indicate local or wide-spread clogging.

- *Buffer Maintenance*. The condition of the grass filter strips in surface trenches should be inspected annually. Growth should be vigorous and dense. Bare spots, eroded areas, or "burned out" areas (road salt or gasoline spill damage) should be reseeded or resodded.

- *Mowing*. Grass filter strips should be mowed at least twice a year to prevent woody growth as well as for aesthetic reasons. Filter strip performance will be impaired if the grass is cut too short. To prevent grass clippings from clogging the trench, mowers should be equipped with baggers or at a minimum be directed away from the trench.

- *Sediment Removal*. The pre-treatment inlets to underground trenches should be checked periodically and cleaned out when sediment fills more than 10 percent of the original capacity. This can be done manually or by a vacuum pump. Inlet and outlet pipes should be checked for clogging and vandalism.

- *Tree Pruning*. Adjacent trees may need to be trimmed if their drip-line (i.e., the reach of the branches) extends over a surface trench so that tree leaves do not clog the trench. In addition, pioneer trees that start to grow in the vicinity of a trench should be removed immediately thereby avoiding root puncture of the filter fabric through which sediment might enter the structure.

The following example demonstrates the design of an infiltration trench.

***Example 10-3***

***Given:*** *A parking lot approximately 12-m (40-ft) wide by 15-m (50-ft) long is to be equipped with an infiltration trench. The infiltration rate of the soil is 13 mm/hr (0.5 in/hr). The voids ratio of the aggregate is 0.4.*

***Find:*** *Determine the trench facility dimensions to achieve desired WQV.*

*First flush volume = (0.013 m) (12 m) (15 m) = 2.34 $m^3$ (82.6 $ft^3$). Use equation 10-4 to determine the minimum and maximum trench depths.*

$$d = (f_c T_s)/(V_r\ 1000)$$
$$d_{min} = (13)(48)/[(0.4)(1000)] = 1.56\ m\ (5.1\ ft)$$
$$d_{max} = (13)(72)/[(0.4)(1000)] = 2.34\ m\ (7.7\ ft)$$

*A minimum 6-m (20-ft) wide buffer should be provided as a filter strip between the edge of the parking lot and the infiltration trench. Size the trench at 8-m (26-ft) long by 4-m (13-ft) wide (not including filter strip) with a depth of 1.8 m (6 ft). Compute the available storage in the voids of the trench:*

$$V = (n)\ (w)\ (L)\ (d)$$

$$V = (0.4)\ (4)\ (8)\ (1.8) = 23\ m^3\ (810\ ft^3)$$

*Since the storage volume meets the required water quality volume, the trench dimensions are acceptable.*

## 10.6 INFILTRATION BASINS

An infiltration basin is an excavated area which impounds stormwater flow and gradually exfiltrates it through the basin floor. They are similar in appearance and construction to conventional dry ponds. However, the detained runoff is exfiltrated though permeable soils beneath the basin, removing both fine and soluble pollutants. Infiltration basins can be designed as combined exfiltration/detention facilities or as simple infiltration basins. They can be adapted to provide stormwater management functions by attenuating peak discharges from large design storms and can serve drainage areas up to 20 ha (50 ac). Figure 10-7 is a plan and profile schematic of an infiltration basin and its components.

Basins are a feasible option where soils are permeable and the water table and bedrock are situated well below the soil surface. Both the construction costs and maintenance requirements for basins are similar to those for conventional dry ponds. Infiltration basins do need to be inspected regularly to check for standing water. Experience to date has indicated that infiltration basins have one of the higher failure rates of any BMP. Failure results from plugging of the permeable soils.

Advantages of infiltration basins include the following:

- They preserve the natural water balance of the site.
- They can serve larger developments.
- They can be used as sediment basins during the construction phase.
- They are reasonably cost effective in comparison with other BMPs.

Disadvantages of infiltration basins include the following:

- They experience a high rate of failure due to unsuitable soils.
- They need frequent maintenance.
- They often experience nuisance problems (e.g., odors, mosquitos, soggy ground).



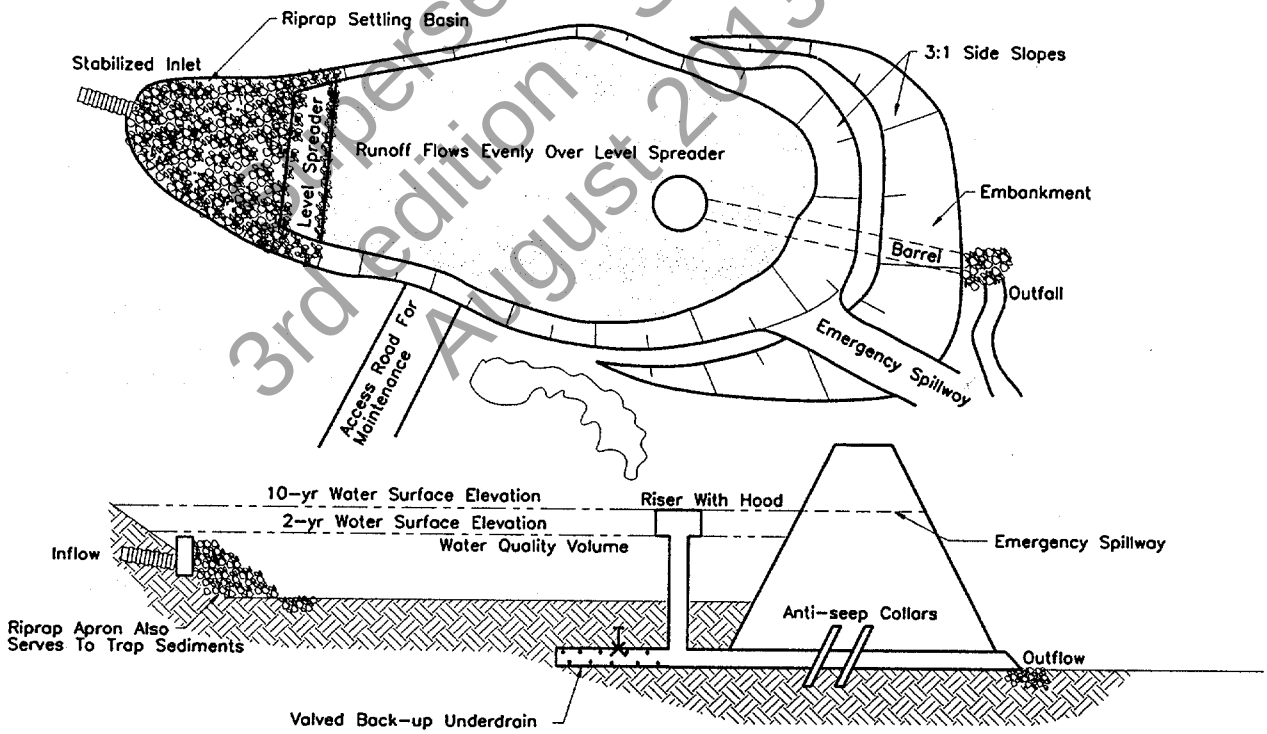


**Figure 10-7. Infiltration basin schematic.**

### 10.9.1 Grassed Swales

Grassed swales are typically applied in developments and highway medians as an alternative to curb and gutter drainage systems. Swales have a limited capacity to accept runoff from large design storms, and often must lead into storm drain inlets to prevent large, concentrated flows from gullying/eroding the swale. HEC-15[34] provides guidance for the design of grassed swales.

Two components which can be incorporated into a grass swale are check dams and level spreaders. Level spreaders are excavated depressions that run perpendicular across the swale. Level spreaders and check dams may be incorporated into a swale design to reduce overland runoff velocities. Figure 10-11 is a schematic of a grassed-swale level spreader and check dam. If check dams are placed across the flow path, swales can provide some stormwater management for small design storms by infiltration and flow attenuation. In most cases, however, swales must be used in combination with other BMPs downstream to meet stormwater management requirements.

Some modeling efforts and field studies indicate that swales can filter out particulate pollutants under certain site conditions. However, swales are not generally capable of removing soluble pollutants, such as nutrients. In some cases, trace metals leached from culverts and nutrients leached from lawn fertilization may actually increase the export of soluble pollutants. Grassed swales are usually less expensive than the curb and gutter alternative.



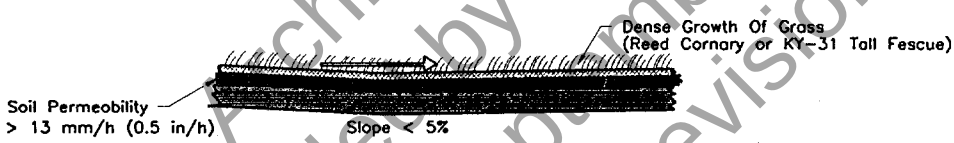


a. Grassy Swale– Slows runoff; filters sediment; roots bind surface of soil and enhance infiltration; grass and leaves protect soil surface from rainfall impact; and litter layer improves porosity.

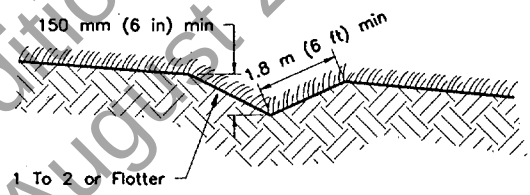


b. Level Spreader– Redistributes concentrated flow to sheet flow, increases infiltration

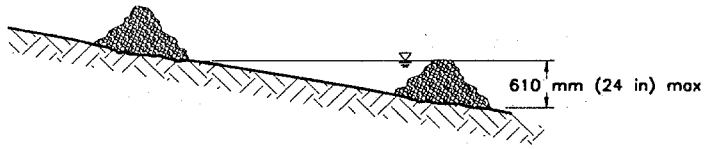


c. Check Dam– Reduces erosive velocities.

**Figure 10-11. Schematic of grassed-swale level spreader and check dam.**

should have a minimum field infiltration rate of 13 mm/h (0.5 in/hr), and be above the seasonally high water table and bedrock level. Basins should never be constructed over fill soils.

- *Watershed Size.* Full infiltration basins can be applied on small watersheds (2 to 10 ha [5 to 25 ac]) that do not have a permanent source of baseflow. Infiltration/detention basins can be used on larger watersheds (up to 20 ha [50 ac]) if there is a design feature for routing baseflow through the structure without infiltrating (side-by-side design).

- *Degree of Infiltration.* To achieve significant pollutant removal, the basin should be capable of completely infiltrating the first flush, equal to the first 13 mm (0.5 in) of runoff per contributing impervious hectare (acre). When possible, even greater quantities of infiltration are preferable.

- *Shape of Basin.* The floor of the basin should be graded as flat as possible to permit uniform ponding and infiltration. Low spots and depressions should be leveled out. Side slopes leading to the floor should have a maximum slope of 3:1 (h:v) to allow for easier mowing and better bank stabilization.

- *Construction.* The basin should be excavated with light equipment with tracks or over-sized tires to minimize compaction of the underlying soils. After the basin is excavated to the final design elevation, the floor should be deeply tilled with a rotary tiller or disc harrow to restore infiltration rates, followed by a pass with a leveling drag. Vegetation should be established immediately. The riser, embankment, and emergency spillway should be sized and constructed to the normal specifications for conventional ponds.

- *Vegetation.* Immediately after basin construction, the floor of the basin should be stabilized by a dense, water-tolerant turf such as reed canary grass or tall fescue. The turf promotes better infiltration, pollutant filtering, and prevents erosion of the basin floor.

- *Basin Inlets.* All basins should have sediment forebays or riprap aprons that dissipate the velocity of incoming runoff, spread out the flow, and trap sediments before they reach the basin floor.

- *Inlet/Outlet Invert Elevations.* The storm drain inlet pipe or channel leading to the basin should discharge at the same invert elevation as the basin floor. Similarly, the low-flow orifice in infiltration and detention basins should be set at the same elevation as the basin floor to prevent baseflow from ponding and thus impeding the function of the basin.

- *Maximum Draining Time.* As a general rule, the depth of storage should be adjusted so that the basin completely drains within 72 hours. Drainage time can be decreased by increasing the surface area of the basin floor or by reducing the depth of storage or both.

- *Basin Buffer.* A minimum buffer of 7.5 m (25 ft) from the edge of the basin floor to the nearest adjacent lot should be reserved. A landscaping plan should be prepared for the basin buffer that emphasizes the use of low maintenance, water tolerant, native plant species that provide food and cover for wildlife and, when necessary, can act as a screen.

- *Erosion Control.* Infiltration basins can be used as temporary sediment control basins during the construction phase as long as at least two feet of original soil is preserved. This soil will be excavated during final construction. As with all infiltration facilities, upland construction areas should be completely stabilized prior to permanent basin construction .

- *Access.* Adequate access to the basin floor should be provided from public or private right-of-way. Such access should be at least 3.7 m (12 ft) wide, and should not cross the emergency spillway. The roadway should be constructed for use by light equipment.

- *Basin Landscaping.* Infiltration basins should have their perimeters stabilized with some form of vegetation. Establishment of vegetation is critical to the overall pollutant removal performance and aesthetics of the BMP. Special care must be taken to select the proper species, given the frequency and inundation of the basin perimeter. Landscaping information around different inundation zones can be found in reference 58.

### 10.6.3 Maintenance Considerations

The maintenance required for infiltration basins is slightly greater than that needed for dry detention ponds. Some of the normal maintenance tasks for infiltration basins are detailed below.[58]

- *Inspection.* The performance of the infiltration basin should be checked after every major storm in the first few months after construction. Particular attention should be paid to how long runoff remains in the structure. Standing water in the basin within 48 to 72 hour after a storm is a good indication that the infiltration capacity of the basin may have been overestimated. After the first few months, the basin should be inspected annually. Some of the more important items to check include: differential settlement, cracking, erosion, leakage or tree growth on the embankment; the condition of the riprap in the inlet, outlet and pilot channels; sediment accumulation in the basin; and the vigor and density of the grass turf on the floor of the basin.

- *Mowing.* The buffer, side slopes, and basin floor must be mowed at least twice a year to prevent woody growth. More frequent mowing may be needed if the basin is to be used as a passive recreation area. Mowing operations may be difficult since the basin floor may often be soggy. If a low-maintenance grass such as tall fescue is used, basin mowing can be performed in the normally dry months.

- *Debris and Litter Removal.* Trash will tend to collect in full-infiltration basins since they do not have outlets. Infiltration/detention designs also will collect trash that might clog the riser or low-flow orifice. Therefore, it is a good practice to remove all debris and litter during each mowing operation.

- *Erosion Control.* This is a very important maintenance task since eroded soils can reduce the infiltration capacity of a basin. Eroding or barren areas should be immediately revegetated.

- *Tilling.* If a basin is located on marginally permeable soils, annual or semi-annual tilling operations may be needed to maintain infiltration capacity. A rotary tiller or disc harrow can be used when soil permeability is likely to be the lowest. Tilled areas should be immediately revegetated to prevent erosion.

- *Structural Repairs/Replacement.* If the basin is of the infiltration/detention basin design, the pipes and barrels will eventually need to be replaced. (Information on pipe longevity is included in section 10.4.3.) However, if the basin is designed for full infiltration (i. e., no outlet apart from an earthen emergency spillway), then the frequency and cost of structural repairs is sharply reduced.

- *Restoration of Infiltration Capacity.* Over time, the original infiltration capacity of the basin floor will gradually be lost. If the problem has been caused by surface clogging, deep tilling can be used to break up the clogged surface layer, followed by regrading and leveling. Deep tilling may be needed every 5 to 10 years. [60] In some instances, sand or organic matter can be tilled into the basin soils to restore infiltration capacity as well. If a basin still experiences chronic problems with standing water after these measures have been taken, it is likely that the original infiltration capacity was overestimated. It may then be necessary to install perforated underdrains beneath the basin to remove the excess water.

- *Sediment Removal.* Infiltration basins are normally located in smaller watersheds that do not generate large sediment loads, or they are equipped with some kind of sediment trap. Even though sediment loads to the basin are likely to be low, they will still have a negative impact on basin performance since the sediment deposits will reduce the storage capacity reserved for infiltration and clog the surface soils. Sediment removal methods in infiltration basins are different from those used for extended detention and wet ponds. Removal should not begin until the basin has had a chance to thoroughly dry out, preferably to the point where the top layer begins to crack. The top layer should then be removed by light equipment, taking care not to unduly compact the basin floor. The remaining soil can then be deeply tilled with a rotary tiller or disc harrow to restore infiltration rates. Areas disturbed during sediment removal should be revegetated immediately to prevent erosion, particularly at the entry point.



## 10.7 SAND FILTERS

Sand filters provide stormwater treatment for first flush runoff. The runoff is filtered through a sand bed before being returned to a stream or channel. Sand filters are generally used in urban areas and are particularly useful for groundwater protection where infiltration into soils is not feasible. Alternative designs of sand filters use a top layer of peat or some form of grass cover through which runoff is passed before being strained through the sand layer. This combination of layers increases pollutant removal.

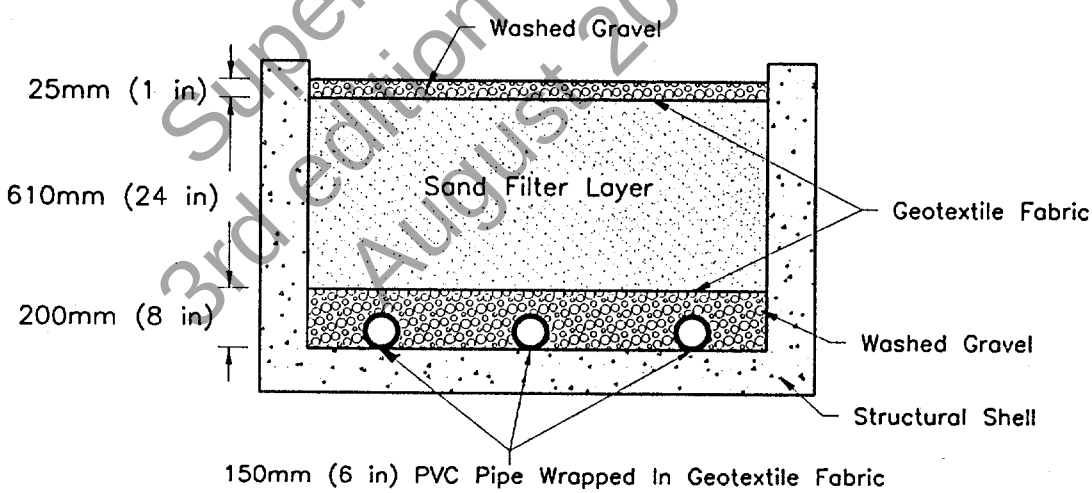


**Figure 10-8. Cross-section schematic of sand filter compartment.**

A variety of sand filter designs are currently in use. Figures 10-8 and 10-9 are examples of the two general types of filter systems. Figure 10-8 shows a cross-section schematic of a sand filter compartment, and figure 10-9 is a cross-section schematic of a peat-sand filter. [70,71]

One of the main advantages of sand filters is their adaptability. They can be used on areas with thin soils, high evaporation rates, low soil infiltration rates, and limited space. Sand filters also have high removal rates for sediment and trace metals, and have a very low failure rate. Disadvantages associated with sand filters include the necessity for frequent maintenance to ensure proper operation, unattractive surfaces, and odor problems.

### 10.7.1 Pollutant Removal Capabilities

Filtration is the main pollutant removal mechanism in a sand filter. Limited nutrient removal is accomplished through biological uptake by the vegetative cover.

Performance monitoring studies have been performed for three sand filter systems in Austin, Texas. [70] Pollutant removal efficiencies for enhanced systems using peat and sand layers has been estimated empirically. [71] Table 10-10 presents the removal percentages for various pollutants for both the sand filters studied in Austin, Texas, and the estimated sand-peat system.

**Table 10-10. Pollutant removal efficiencies for sand and sand-peat filter systems.** [67,70]

| Pollutant | Avg of three sand systems Austin, TX (%) | Projected sand/peat system (%) |
|---|---|---|
| TSS | 85 | 90 |
| TN | 35 | 50 |
| TP | 40 | 70 |
| Fecal coliform | 40 | * |
| Trace metals | 50-70 | 80 |
| Bacteria | * | 90 |
| BOD | * | 90 |

* Not monitored or projected.



### 10.7.2 Design Guidance

Sand filters generally provide water quality treatment of runoff from watershed areas between 0.2 to 4.0 ha (1/2 to 10 ac). They are primarily used to treat small parking lots and ultra-urban areas (highly impervious development). It is feasible to apply a sand filter system in areas that preclude the use of infiltration devices, i.e., areas where soils are thin, evaporation rates are high, and soil infiltration rates are low. The use of sand filters is also appropriate as a retrofit BMP for established urban watershed areas, specifically those areas developed prior to the passage of stormwater management regulations.

A number of standard sand filter designs are available. Specific design guidance, including computational information for sizing sand and sand-peat systems can be found in references 70 and 71.

### 10.7.3 Maintenance Considerations

Sand filters should be inspected on a quarterly basis to maintain porosity. The top layer of washed gravel will clog and should be replaced approximately every three to five years. On enhanced systems, the grass crop cover should be periodically mowed and the clippings removed. In order to achieve optimum nutrient removal efficiency, the plant biomass should be harvested and removed periodically.

## 10.8 WATER QUALITY INLETS

Water quality inlets are pre-cast storm drain inlets that remove sediment, oil and grease, and large particulates from parking lot runoff before it reaches storm drainage systems or infiltration BMPs. They are commonly known as oil and grit separators. Water quality inlets typically serve highway storm drainage facilities adjacent to commercial sites where large amounts of vehicle wastes are generated, such as gas stations, vehicle repair facilities, and loading areas. They may be used to pretreat runoff before it enters an underground filter system. The inlet is a three-stage underground retention system designed to settle out grit and absorbed hydrocarbons.

An oil and grit separator consists of three chambers as shown in figure 10-10; a sediment trapping chamber, an oil separation chamber, and the final chamber attached to the outlet. The sediment trapping chamber is a permanent pool that settles out grit and sediment, and traps floating debris. An orifice protected by a trash rack, connects this chamber to the oil separation chamber. This chamber also maintains a permanent pool of water. An inverted elbow connects the separation chamber to the third chamber.

Advantages of the water quality inlets lie in their compatibility with the storm drain network, easy access, capability to pretreat runoff before it enters infiltration BMPs, and in the fact that they are unobtrusive. Disadvantages include their limited stormwater and pollutant removal capabilities, the need for frequent cleaning (which cannot always be assured), the possible difficulties in disposing of accumulated sediments, and costs.



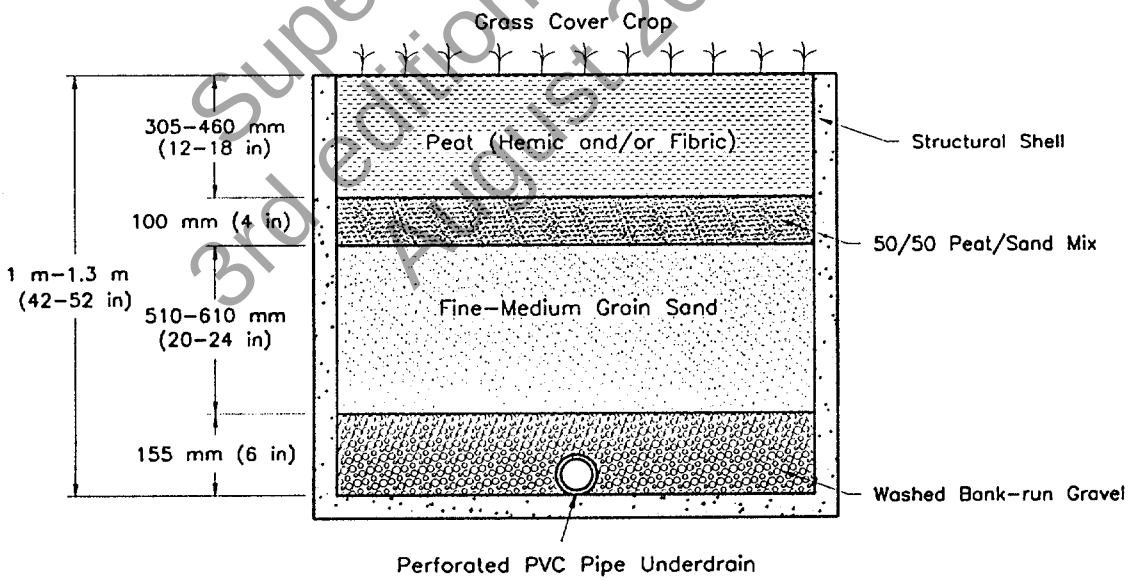


**Figure 10-9. Cross-section schematic of peat-sand filter.**

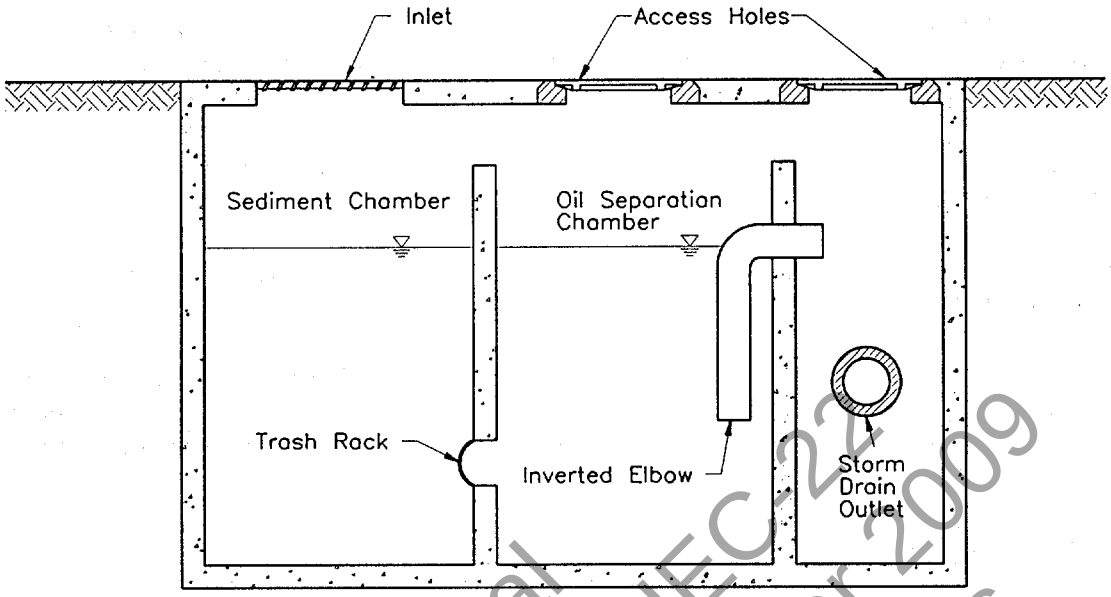


**Figure 10-10. Cross-section detail of a typical oil/grit separator.**



### 10.8.1 Pollutant Removal Capabilities

No field studies have been performed to determine the pollutant removal effectiveness of water quality inlets. Actual pollutant removal is only accomplished when trapped residuals are cleaned out of the inlet. Sediment tracer studies on catch basin performance indicate that 10 to 25 percent of sediment and trace metals and less than 10 percent of the nutrients in urban runoff are removed. Lesser amounts are removed if the basins are not cleaned regularly. [58] Resuspension of particles and subsequent transport through the system is a common occurrence and results in low removal rates.

Proper design of water quality inlets should provide moderate removal of hydrocarbons. Lighter oil and gas remains on the pool surface and is unable to leave the chamber. The film remains on the water surface until it is removed by maintenance. Maintenance is important since water quality inlets achieve only minimal removal unless cleaned out regularly.

### 10.8.2 Design Guidance

A properly designed oil and grit separator should consider the following elements:

- *Permanent Pool Storage.* Separators must provide 28.5 $m^3$ (400 $ft^3$) of storage per ha of contributing surface area. Design the first two chambers to store the maximum volume of runoff to aid settling. The third chamber should also have a permanent pool.

- *Inverted Elbow.* The inverted pipe should extend at least 0.9 m (3 ft) below the permanent pool elevation in the second chamber to separate the film from the water. The elbow must be at least 0.3 m (1 ft) from the bottom of the second chamber.

- *Area Served.* Inlets typically serve impervious areas of less than 0.4 ha (1 ac).

- *Preventing Resuspension.* Resuspension of deposited pollutants can be a problem in inlets. The use of vertical baffle plates on chamber floors may help alleviate this problem. Also, the floor of each chamber should slope slightly adverse to the flow direction.

- *Use with Underground Infiltration.* Inlets can be used to pretreat runoff before it enters an underground infiltration facility (e.g., an infiltration trench).

- *Access.* To facilitate clean-outs, access to each chamber should be provided by means of a separate access hole and step rings.

- *Hydraulic Design.* The inlet should be designed to pass the two-year design storm. This is normally done by extending a weir at least 0.3 m (1 ft) above the water level in each chamber. There should be at least 0.3 m (1 ft) clear between the top of the weir and the top of the structure.

### 10.8.3 Maintenance Considerations

It is recommended that water quality inlets be cleaned out on a quarterly basis, or at a minimum, twice a year. Removal is accomplished by either pumping out the contents or carefully siphoning out each chamber and then removing the grit and sediment manually. The slurry and sediment should be transferred to a landfill for final disposal.

At installations near gasoline stations and vehicle repair facilities, maintenance should be performed on a monthly basis, or following the occurrence of oil spills. The standing pool of water within the water quality inlet may lead to anaerobic conditions, resulting in foul odors. Maintenance workers should be protected from trapped gases.

## 10.9 VEGETATIVE PRACTICES

Several types of vegetative BMPs can be applied to convey and filter runoff. They include:

- Grassed swales
- Filter strips
- Wetlands

Vegetative practices are non-structural BMPs and are significantly less costly than structural controls. They are commonly used in conjunction with structural BMPs, particularly as a means of pre-treating runoff before it is transferred to a location for retention, detention, storage or discharge.

All of these practices rely on various forms of vegetation to enhance the pollutant removal, the habitat value and the appearance of a development site. While each practice by itself is not generally capable of entirely controlling the increased runoff and pollutant export from a site, they can improve the performance and amenity value of other BMPs and should be considered as an integral part of site plans. Vegetative BMPs can usually be applied during any stage of development and in some instances, are attractive retrofit candidates.

### 10.9.1 Grassed Swales

Grassed swales are typically applied in developments and highway medians as an alternative to curb and gutter drainage systems. Swales have a limited capacity to accept runoff from large design storms, and often must lead into storm drain inlets to prevent large, concentrated flows from gullying/eroding the swale. HEC-15[34] provides guidance for the design of grassed swales.

Two components which can be incorporated into a grass swale are check dams and level spreaders. Level spreaders are excavated depressions that run perpendicular across the swale. Level spreaders and check dams may be incorporated into a swale design to reduce overland runoff velocities. Figure 10-11 is a schematic of a grassed-swale level spreader and check dam. If check dams are placed across the flow path, swales can provide some stormwater management for small design storms by infiltration and flow attenuation. In most cases, however, swales must be used in combination with other BMPs downstream to meet stormwater management requirements.

Some modeling efforts and field studies indicate that swales can filter out particulate pollutants under certain site conditions. However, swales are not generally capable of removing soluble pollutants, such as nutrients. In some cases, trace metals leached from culverts and nutrients leached from lawn fertilization may actually increase the export of soluble pollutants. Grassed swales are usually less expensive than the curb and gutter alternative.



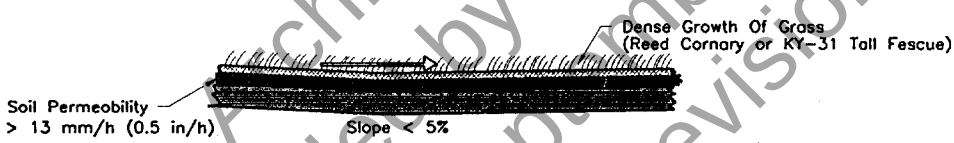


a. Grassy Swale– Slows runoff; filters sediment; roots bind surface of soil and enhance infiltration; grass and leaves protect soil surface from rainfall impact; and litter layer improves porosity.

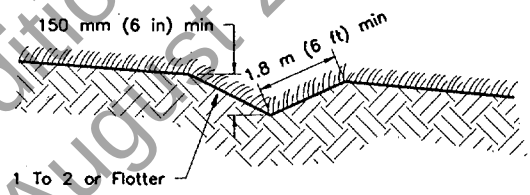


b. Level Spreader– Redistributes concentrated flow to sheet flow, increases infiltration

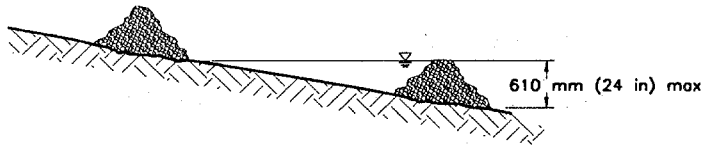


c. Check Dam– Reduces erosive velocities.

**Figure 10-11. Schematic of grassed-swale level spreader and check dam.**

In addition to being simple conveyors of stormwater, conventional grassy swales can also be used as biofilters in the management of the quality of stormwater runoff from roads. Conventional swales which are designed to increase hydraulic residence to promote biofiltration are known as biofiltration swales. Biofiltration swales take advantage of filtration, infiltration, adsorption, and biological uptakes as runoff flows over and through vegetation. Removal of pollutants by a biofiltration swale depends on the time that water remains in the swale, or the hydraulic residence time, and the extent of its contact with vegetation and soil surfaces. The Washington State Department of Transportation "*Highway Runoff Manual*" is an excellent reference on biofiltration swales. [72]

#### 10.9.1.1 Pollutant Removal Capability

Pollutant removal mechanisms of a grassed swale include the filtering action of the grass, which removes particulate pollutants, and infiltration into the subsoil, which removes soluble pollutants. The expected removal efficiency of a well-designed, well-maintained conventional swale is summarized in table 10-11. A recent study on biofiltration swales indicate the removal rates as shown in table 10-12.[73] These results are based on 9.3 min of residence time. Pollutant removal rates can be expected to be less with a shorter residence time. Residence time refers to the time period that flow comes into contact with the vegetation and soils. The actual rate of removal for a swale depends on its length, slope, soil permeability, hydraulic residence time, flow depth, runoff velocity, and the characteristics of the vegetation.

**Table 10-11. Pollutant removal efficiencies of grassed swales.** [58]

| Pollutant | Removal Efficiency (%) |
|---|---|
| TSS | 70 |
| TP | 30 |
| TN | 25 |
| Trace metals | 60-90 |
| Soluble metals | 46 |



#### 10.9.1.2 Design Guidance

Grassy swales are designed to provide erosion protection and pollutant removal. Swales also provide a transition to channels, inlets and receiving waters. Well-designed swales should consider site topography, slope, soil infiltration rates, residence time, flow characteristics (depth and velocity), and vegetation type. The following provide general design criteria for grassed swales:

- *Infiltration Rate*. The infiltration rate of the underlying soil should be greater than 13 mm/hr (0.5 in/hr).
- *Shape*. Swales are typically trapezoidal or parabolic, with side slopes 3:1 (h:v) or less.
- *Vegetation*. A dense cover of water-tolerant, erosion-resistant grass should be established.

**Table 10-12. Pollutant removal efficiencies of biofiltration swales.** [73]

| Pollutant | Removal Efficiency (%) |
|---|---|
| TSS | 83 |
| TP | 29 |
| Lead | 67 |
| Oil and grease | 75 |
| Soluble metals | 46 |

- *Check Dams*. In addition to reducing erosive velocities, check dams improve the hydrologic performance of swales by temporarily ponding runoff, and increasing infiltration. Check dams usually consist of crushed rock or pretreated timber up to a 610-mm (24-in) height (see figure 10-11).

- *Water Table*. The seasonally high water table should not be less than 0.6 m (2 ft) below the bottom of the swale to ensure an adequate opportunity for infiltration.

Specific design guidance for grassed swales can also be found in references 58, 64, 66, 68, 69, and 73.

10.9.1.3 Maintenance Considerations

Swale maintenance is largely aimed at keeping the grass cover dense and vigorous. This primarily involves periodic mowing, occasional spot reseeding, and weed control. Watering may also be necessary in times of drought, particularly in the first few months after establishment. Overzealous lawn maintenance can present some problems. For example, mowing the swale too close to the ground and excessive application of fertilizers and pesticides will detrimentally affect the performance of the swale.

### 10.9.2 Filter Strips

Filter strips are similar in many respects to grassed swales, except that they are designed to only accept overland sheet flow. Runoff from an adjacent impervious area must be evenly distributed across the filter strips. This is not an easy task, as runoff has a strong tendency to concentrate and form a channel. Once a channel is formed, the filter strip is effectively "short-circuited" and will not perform as designed.

To work properly, a filter strip must be (1) equipped with some sort of level spreading device, (2) densely vegetated with a mix of erosion resistant plant species that effectively bind the soil, (3) graded to a uniform, even, and relatively low slope, and (4) be at least as long as the contributing runoff area. HEC-15 should be consulted for permissible shear stresses (erosion resistance) of various types of vegetation. [34] Modeling studies indicate that filter strips built to these exacting specifications can remove a high percentage of particulate pollutants. Much less is known about the capability of filter strips in removing soluble pollutants. Filter strips are relatively inexpensive to establish and cost almost nothing if preserved before the site is developed. A creatively landscaped filter strip can become a valuable community amenity, providing wildlife habitat, screening, and stream protection. Grass filter strips are also extensively used to protect surface infiltration trenches from clogging by sediment.

Filter strips do not provide enough storage or infiltration to effectively reduce peak discharges. Typically, filter strips are viewed as one component in an integrated stormwater management system. Thus, the strips can lower runoff velocity (and, consequently, the watershed time of concentration), slightly reduce both runoff volume and watershed imperviousness, and contribute to groundwater recharge. Filter strips are also of great value in preserving the riparian zone and stabilizing streambanks.

#### 10.9.2.1 Pollutant Removal Capability

The pollutant removal efficiencies of filter strips are similar to that of grassed swales. Moderate to high removal of particulate pollutants (sediment, organic material, trace metal) can be expected. Filter strips are less efficient than swales at removing soluble pollutants due to the small portion of runoff that is infiltrated into the soil.

Pollutant removal mechanisms in filter strips are similar to those discussed for grass swales. Results from some small test plots and several independent modeling studies all suggest that filter strips are effective in removing particulate pollutants such as sediment, organic material, and many trace metals.[58] The rate of removal appears to be a function of the length, slope, and soil permeability of the strip, the size of the contributing runoff area, and the runoff velocity.

Forested filter strips appear to have greater pollutant removal capability than grassed filter strips.[74] A major reason cited for their efficiency is the greater uptake and long-term retention of nutrients in forest biomass. However, because vegetative cover in forested strips is not as dense as grass strips, they should probably be at least twice the length of grass strips to achieve optimal removal. A detailed discussion for stability of grassed linings can be found in reference 34.



#### 10.9.2.2 Design Guidance

From a design standpoint, the only variables that can be effectively manipulated are the length and slope of the strip. A minimum strip length of 6 m (20 ft) is suggested; however, strips ranging in size from 30 to 90 m (100 to 300 ft) are probably needed for adequate removal (more than 50 percent) of the smaller-sized sediment particles found in urban runoff.

Filter strips do not efficiently trap pollutants in an urban setting, with reported removal of suspended solids at only 28 percent.[67] If flow is allowed to concentrate before it reaches the filter strip, or as it crosses over it, removal rates will be significantly reduced. The following design guidelines can help to prevent concentrated, erosive flows from forming in a strip:

- The top edge of the filter strip should follow across the same elevational contour. If a section of the top edge of the strip dips below the contour, it is likely that runoff will eventually form a channel toward the low spot.

- A shallow stone-filled trench can be used as a level spreader at the top of the strip to distribute flow evenly. This also serves to protect the strip from man-made damage.

- The top edge of the filter strip should directly abut the contributing impervious area. Otherwise, runoff may travel along the top of the filter strip, rather than through it. It is suggested that berms be placed at 15 to 30 m (50 to 100 ft) intervals perpendicular to the top edge of the strip to prevent runoff from bypassing the strip.

- The appropriate length for filter strips is still the subject of some debate. As an absolute minimum, a grass strip should be at least 6 m (20 ft) long. Better performance can be achieved if the strip is 15 to 23 m (50 to 75 ft) long, plus an additional 1.3 m (4 ft) per each one percent of slope at the site (particularly if it is a forested strip).

- Wooded filter strips are preferred to grassed strips. If an existing wooded belt cannot be preserved at the site, the grassed strip should be managed to gradually become wooded by intentional plantings.

- If a filter strip has been used as a sediment control measure during the construction phase, it is advisable to regrade and reseed the top edge of the strip. Otherwise the sediment trapped in the filter strip may affect the flow patterns across the strip, thereby reducing its effectiveness.

- Filter strips will not function as intended on slopes greater than 15 percent. These steeper slopes should still be vegetated but off-site runoff should be diverted around rather than through them. Filter strip performance is best on slopes with a grade of 5 percent or less. When the minimum length, 6 m (20 ft) filter strips are used (for example, to protect a surface infiltration trench), slopes should be graded as close to zero as drainage permits. [34]

#### 10.9.2.3 Maintenance Considerations

Filter strips should be inspected annually for damage by foot or vehicular traffic, encroachment, gully erosion, and density of vegetation. Special care should be taken to ensure that concentrated flow channels do not form. More maintenance may be required in the initial stages of filter life to assure that the filter establishes itself properly.

Filter strips which are not intended to undergo natural succession of the vegetation should be mowed two to three times a year to suppress weed growth. Accumulated sediments at the top of the strip should be removed as needed to keep the original grade.

### 10.9.3 Wetlands

Wetlands can be a highly efficient means of removing pollutants from highway and urban runoff. Often, wetlands or shallow marshes are used in conjunction with other BMPs to achieve maximum pollutant removal. A recent study concluded that detention basins and wetlands appear to function equally well at removing monitored pollutant parameters. [75] An ideal design of a wetland as a quality measure would include the creation of a detention basin upstream of the wetland. The detention basin provides an area where heavy particulate matter can settle out, thus minimizing disturbance of the wetland soils and vegetation.

The use of wetlands for BMP purposes is generally applicable in conjunction with wet pond sites provided that the runoff passing through the vegetation does not dislodge the aquatic vegetation. [58] Consult HEC-15 to determine vegetation stability. [34] Vegetation systems may not be effective where the water's edge is extremely unstable or where there is heavy use of the water's edge. Some types of marsh vegetation are not effective in flood-prone areas due to the alteration of the hydraulic characteristics of the watercourse.

### 10.9.3.1 Pollutant Removal Capability

Pollutant removal mechanisms at work in a wetland system include sedimentation, adsorption, filtration, infiltration, and biological uptake. The removal processes within a wetland are not fully understood and actual removal efficiencies are difficult to gauge. A wide variation of removal efficiency is generally observed due to the wide range of wetland characteristics (vegetation, hydrology).

Recent case studies have investigated pollutant removal efficiencies of wetlands. [75] These studies monitored total suspended solids (TSS), nutrients and metals. There is a wide variability in the reported efficiencies of the wetlands, but some general conclusions can be drawn:

- Median removal efficiency for TSS was 76 percent, indicating good pollutant removal potential for fine particulate pollutants.
- Removal efficiencies are higher and more consistent in constructed wetlands than in natural systems.
- Nutrient removal is variable and is a function of the season, vegetation type and other wetland characteristics.

### 10.9.3.2 Design Guidance

Careful design of a wetland system is necessary to achieve good pollutant removal capabilities, specifically as it relates to establishment of vegetation. As mentioned earlier, wetlands are often used in conjunction with ponds; either at the perimeter of a wet pond, at the lower stage of an extended detention pond, or in a sediment forebay. The establishment of a wetlands requires a multi-disciplined design team including hydrologists and plant and animal ecologists. The following design guidance describes methods for the successful establishment of a wetlands. [58]

- *Site Selection*. A potential wetland site must have sufficient inflow (baseflow and runoff) to maintain a constant water pool. Outflow by infiltration must be less than the inflow to the basin. Soils in the area should support this balance, otherwise a clay or plastic liner must be used. It is critical that a water balance be performed to ensure adequate conditions to support wetland vegetation and aquatic life.
- *Water Depth*. Many types of wetland vegetation require specific water depths to flourish. Grading of the basin should be done carefully to achieve appropriate depths throughout the wetlands. Approximately 75 percent of the wetland pond area should have water depths less than 300 mm (12 in). [66] This provides the optimal growth depth for most wetland plant species.
- *Aquatic Bench/Sediment Forebay*. A perimeter area of approximately 3 to 6 m (10 to 20 ft) beyond the constant pool of the wetlands, which is periodically flooded during runoff events, should be established for aquatic emergents. It is recommended that the bench extend around at least half of the pond's perimeter. Also, the pond can be excavated to provide a shallow area for marsh establishment (and sediment deposition) near the inflow channel.
- *Outlet Structure*. Wetland basins should use an extended detention time of 24 hr for a 1-year storm. [66] Outlet structures should be designed to dam up the water necessary for the wetland,

detain the volume required for extended detention, and permit water to flow from the wetland without blockage.

- *Vegetation*. At least five different wetland species should be established in the marsh. Two "primary species" should be planted throughout 30 percent of the total shallow water area, 0.6 to 0.9 m (2 to 3 ft) apart. Up to three "secondary species" should be established, approximately 125 plants per ha (50 plants per ac), around the perimeter of the wetland. This planting strategy is designed to take advantage of natural propagation to fill out the rest of the marsh. Also, since a diverse number of wetland species are utilized, the strategy minimizes the risk that the marsh will not become successfully established.

- *Water Budget*. Wetland design must include a water budget evaluation as described in Chapter 8. This evaluation should be developed for wet, average, and dry years to ensure that an adequate volume of water is available to sustain the wetland.

Greater detail on the design and establishment of shallow marshes and wetland systems can be found in references 58 and 66.



#### 10.9.3.3 Maintenance Considerations

Once a wetland has a stabilized system of vegetation, maintenance requirements are few. The removal of accumulated sediment is the primary maintenance concern. The sediment forebay should be cleaned out every 5 to 10 yr or upon reaching a specified sediment depth. Natural succession should be allowed to occur to ensure diversity of the vegetation. Periodic inspection of the wetland by a biologist or ecologist is recommended.

## 10.10 TEMPORARY EROSION AND SEDIMENT CONTROL PRACTICES

Most states have erosion and sedimentation (E&S) control regulations for land disturbance activities. The purpose of E&S measures is to reduce erosive runoff velocity and to filter the sediment created by the land disturbance. Temporary E&S controls are applied during the construction process, and consist of structural and/or vegetative practices. The control measures are generally removed after final site stabilization unless they prove to be necessary for permanent stabilization.

For an E&S program to be effective, provisions for the control measures should be made during the planning stage, and implemented during the construction phase. The basic technical principles that should be adhered to by the planner/designer include the following: [76]

- Plan the project to fit the particular topography, soils, drainage patterns and natural vegetation of the site.

- Minimize the extent of the area exposed at one time and the duration of the exposure.

- Apply erosion control practices within the site to prevent on-site damage.

- Apply perimeter control practices to protect the disturbed area from off-site runoff and to prevent sedimentation damage to areas below the development site.

- Keep runoff velocities low and retain runoff on the site to the extent possible.
- Stabilize disturbed areas immediately after final grade has been attained.
- Implement a thorough maintenance and follow-up program. E&S controls should be inspected and repaired as necessary following each significant rainfall event.

A wide variety of E&S control practices are available to the planner/designer, consisting of both vegetative and structural practices. Environmental regulatory agencies in most states have developed detailed design guidelines for the application of erosion and sediment controls for land development activities within the state. These guidelines should be referenced for applicable design guidance. This section provides a brief summary of erosion and sediment control practices.

### 10.10.1 Mulching

Mulching refers to the application of plant residues or other suitable materials to disturbed surfaces to prevent erosion and reduce overland flow velocities. Mulching also fosters plant growth by increasing available moisture and providing insulation against extreme heat or cold.

### 10.10.2 Temporary/Permanent Seeding

Temporary and permanent seeding are the two types of vegetative controls. Temporary seeding should be provided in areas that will be dormant for 15 days or more. Permanent seeding is required on areas that will be dormant for one year or more. Selection of vegetation types depends on the season, site conditions and costs. Local erosion and sediment control manuals should be consulted for descriptions and costs of the applicable vegetation types.

### 10.10.3 Sediment Basins

A sediment basin is a constructed embankment of compacted soil across a drainageway which detains sediment-laden runoff. They are normally used when construction disturbs 2 ha (5 ac) or more of area. The basin allows runoff to pond and sediment to settle out. Outflow is controlled by a release structure (either a riser or a rock check dam outlet). Maximum life is 18 months, unless designed as a permanent pond.

The embankment of a sediment basin should be checked regularly to ensure that it is structurally sound and has not been damaged by erosion or construction equipment. Accumulated sediment within the basin should be removed as necessary.

### 10.10.4 Check Dams

Check dams are small temporary dams constructed across a drainage ditch to reduce erosive runoff velocities of concentrated flows. Check dams are limited to use on small open channels draining 4 ha (10 ac) or less. Sediment should be removed when it reaches approximately half the height of the dam. Check dams should be spaced in the channel so that the crest of the downstream dam is at the elevation of the toe of the upstream dam.

### 10.10.5 Silt Fence

A silt fence is the most widely used temporary sediment barrier. The fence consists of a filter fabric supported by wooden posts or wire mesh. It is placed across or at the toe of a slope to intercept and detain sediment and reduce flow velocities. The maximum effective life of a silt fence is approximately six months. Proper maintenance of a silt fence requires removal of sediment deposits when necessary. Silt fences which decompose or become ineffective prior to the end of the expected useable life should be replaced immediately.

### 10.10.6 Brush Barrier

A brush barrier is a temporary sediment barrier composed of spoil material from the clearing of a site. Material such as limbs, weeds, vines, root mats, soil, rock and other cleared material are pushed together at the perimeter of a site and at the toe of fills. Maintenance measures include inspection following each rainfall and removal of sediment deposits when they reach half of the barrier height.

### 10.10.7 Diversion Dike

A diversion dike is constructed of compacted soil and is used to divert runoff to an acceptable location. They are placed either at the top of a disturbed area to divert off site runoff, or at the bottom to deflect sediment-laden runoff to a sediment trapping structure. The maximum useful life of a diversion dike is approximately 18 months. Dikes should be inspected weekly and after rainfall events and repairs made as necessary.

### 10.10.8 Temporary Slope Drain

A slope drain is a flexible tubing or conduit used to convey concentrated runoff from the top to the bottom of a disturbed area without causing erosion on or below the slope. It can also be used to carry stormwater down a slope away from a control facility. Slope drains should be inspected weekly and after rainfall events to ensure proper operation.

Detailed design information on these and other temporary sediment and erosion control measures can be found in references 69 and 76 as well as other state erosion control manuals.

# 11. SUMMARY OF RELATED COMPUTER PROGRAMS

Several software packages are available which provide quick and precise analysis of urban hydrology and hydraulics. The software reviewed in this chapter are public sector programs which incorporate many of the procedures discussed in this manual. The following modeling packages are reviewed:

- HYDRAIN
- TR-55
- TR-20
- HEC-1
- SWMM
- PSRM-QUAL
- DR3M
- Hydraulic Toolbox (HY-TB)
- Urban Drainage Design Software

Figure 11-1 presents a software vs. capabilities matrix for these software packages. Some of the models have a single capability, such as hydrologic analysis, while other packages offer a variety of analysis and design options.

| | Storm Drains | Hydrol-ogy | Water Surface Profiles | Culverts | Roadside/Median Channels | Water Quality | Pavement Drainage | Pond Routing | BMP Evalua-tion | Metric Version |
|---|---|---|---|---|---|---|---|---|---|---|
| HYDRAIN | • | • | • | • | • | | • | • | | • |
| TR-55 | | • | | | | | | | | |
| TR-20 | | • | | | | | | • | | |
| HEC-1 | | • | | | | | | • | | • |
| SWMM | • | • | | | | • | • | • | • | • |
| PSRM-QUAL | • | • | | | | • | • | • | * | |
| DR3M | • | • | | | | | • | • | | |
| HY-TB | • | | | | • | | • | | | |
| Urban Drainage | • | | | | • | | • | • | | • |
| Evaluation of Water Quality | | | | | | • | | | • | |

* To be added in a future update.

**Figure 11-1. Software versus capabilities matrix.**

Many private and public domain software products are available for the analysis and design of various components of storm drain systems. These products range from simple computational tools for specific components of the storm drain system to complex programs which can analyze complete storm drain systems using interactive graphical interfaces. The computer hardware and software industry is a rapidly changing industry in which new and more advanced applications software are developed each year. This chapter is limited to a review of public sector software. As public sector software, user support is

minimal or nonexistent if the software is obtained directly from the Government. Private vendors sell many of these packages and may offer user support.

## 11.1 HYDRAIN

HYDRAIN is an integrated computer software system consisting of hydraulic and hydrologic analysis programs. [77] The system manages engineering computations and data associated with the following subprograms:

- HYDRA - Storm Drain and Sanitary Sewer Design and Analysis
- WSPRO - Open Channel Water Surface Analysis, Bridge Hydraulics, Scour
- HYDRO - Design Event versus Return Period Hydrology
- HYCLV - Culvert Design and Analysis
- HY8 - FHWA Culvert Analysis and Design
- HYCHL - Flexible and Rigid Channel Lining Design and Analysis
- HYEQT - Equation Program
- NFF - USGS National Flood Frequency Program

HYDRAIN is a versatile hydrologic and hydraulic software package. The subprograms within the system offer a variety of analysis and design option tools. The HYDRAIN programs are embedded within a system shell which allows for quick and easy access to each module. File operations, access to program editors, and other DOS utilities can be performed through the input shell.

Data entry for most programs within the system is done through the command line editor. The editor is equipped with short and long helps to aid the user. The user supplies the input data for the subprogram within one input file. If the subprogram is run from within the HYDRAIN environment, the input file may be modified without leaving HYDRAIN by using the built-in editor. This feature minimizes time required for data modification and job resubmission.

HY8 and HYCHL are interactive programs. In other words, these programs access a series of menus which ask the user for specific input.

HYDRAIN can handle almost all aspects of storm drain design in a highway context. It is applicable to analysis of simple hydrologic situations and design or analysis of simple and complex hydraulic systems. HYDRAIN is easy to use, providing a full screen input editor and extensive help messages available to the user.



### 11.1.1 HYDRA

HYDRA (**H**ighwa**Y** Storm **DRA**inage) is a storm drain and sanitary sewer analysis and design program. Originally developed in 1975, the program ran on mainframe computer systems. HYDRA provides hydraulic engineers a means of accurately, easily and quickly designing and analyzing storm, sanitary, or combined collection systems. The following is a list of HYDRA's more useful features:

- *Operational Modes*. HYDRA operates in two modes: design and analysis. In the analysis mode, HYDRA analyzes a drainage system given user-supplied specifications. In the design mode, HYDRA can "free design" its own drainage system based on design criteria supplied by the user.

- *System Types*. In either the design or the analysis mode, HYDRA can work with three possible types of systems: 1) storm drain systems, 2) sanitary (sewer) systems, and 3) combined (storm and sanitary) sewer systems.

- *Hydraulic Analysis Features*. Two options are available to HYDRA users. They are the calculation of the hydraulic grade line through a system and the simulation of a system under pressurized (surcharged) flow conditions.

- *Storm Flow Simulation Methods*. HYDRA is capable of simulating storm flow based on either the Rational method for peak flow simulation or user-supplied hydrographic simulation.

- *Detention Basin Routing*. HYDRA will design or analyze a detention pond by routing a hydrograph with the Storage-Indication method.

- *Planning*. HYDRA can be used for determining the most practical alternatives for unloading an existing overloaded storm drain and for formulating Master Plans to allow for the orderly growth of these systems.

- *Drainage Systems Size*. HYDRA has a data handling algorithm especially designed to accept a drainage system of any realistically conceivable design, including complicated branching systems.

- *Infiltration/Inflow Analysis*. HYDRA can account for undesirable inputs, such as infiltration in sanitary sewer systems.

- *Cost Estimation*. HYDRA's cost estimation capabilities include consideration of de-watering, traffic control, sheeting, shrinkage of backfill, costs of borrow, bedding costs, surface restoration, rock excavation, pipe zone costs, etc. HYDRA is also sufficiently flexible to allow cost criteria to be varied for any segment of pipe in a system, if desired. Ground profiles, either upstream or downstream from any specified point along the system, can also be accepted for consideration in cost estimation, if desired.



### 11.1.2 WSPRO

WSPRO (**W**ater **S**urface **PRO**file) is a water surface profile computation program originally developed by the United States Geological Survey (USGS) for the Federal Highway Administration. Water-surface profile computations are made with the standard step method in the absence of bridges.

WSPRO has the capability to perform water surface profile computations for six major types of flow situations: (1) unconstricted flow, (2) single-opening bridge, (3) bridge opening(s) with guide banks, (4) single-opening, embankment overflow, (5) multiple alternatives for a single job, and (6) multiple openings. The model includes a floodway analysis option and bridge pier and abutment scour computations. Some of the specific capabilities of WSPRO include:

- *Flow Types*. Any combination of subcritical, critical, and supercritical flow profiles may be analyzed for one-dimensional, gradually varied, steady flow.

- *Varied Discharges*. Discharge may be varied from cross section to cross section to account for tributary and lateral-flow gains or losses.

- *Multiple Profiles.* Up to 20 profiles for different discharges and/or initial water-surface elevations may be computed at one time.

- *Free Surface/Pressure Flow Simulation.* The model can compute backwater for both free-surface and pressure-flow situations at a bridge.

- *Road Overtopping*. The model can compute water-surface profiles through bridges for cases where road overflow occurs in conjunction with flow through the bridge opening.

- *Multiple Opening*. The model can analyze multiple waterway openings for a cross section, including culverts when used as one of the multiple openings.

### 11.1.3 HYDRO

*HYDRO* is a hydrologic analysis program based on the FHWA's Hydraulic Design Series No. 2. It combines existing approaches for rainfall runoff analysis into one system. [6] HYDRO generates point estimates or a single design event. It is not a continuous simulation model. HYDRO uses the probabilistic distribution of natural events such as rainfall or stream flow as a controlling variable. HYDRO can be considered a computer-based subset of HDS-2.

HYDRO capabilities are divided into three major hydrological categories; rainfall analysis, Intensity-Duration-Frequency (IDF) curve generation, and flow analysis. HYDRO's rainfall analysis features allow the user to investigate steady-state (rainfall intensity) and dynamic (hyetograph) rainfall conditions. Both the rainfall analysis and IDF curve generation are a function of frequency, geographic location, and duration of the storm event.

- *Rainfall Analysis*. HYDRO can internally calculate rainfall intensities for any site in the continental United States. This rainfall is a single peak rainfall. HYDRO can also be used to create a triangular hyetograph.

- *IDF Curves*. IDF curves can be created using the internal intensity data bases. The curves will show, for a user-provided frequency, the duration versus intensity for any location in the continental United States. The frequency can be any whole number between 2 and 100 years and the duration can extend from 5 minutes to 24 hours of rainfall duration.

- *Peak Flow Methods*. HYDRO implements three peak flow methods: the Rational method; user-supplied regression equations; and the Log-Pearson Type III method. Each of these methods produce a single peak flow value or steady state of low-flow value.

- *Hydrograph Method.* HYDRO can combine the peak flow with the dimensionless hydrograph to handle hydrographic or dynamic flow conditions. HYDRO includes two dimensionless hydrograph methods: the USGS nationwide urban method and the semi-arid method.

### 11.1.4 HY8

*HY8* is an interactive BASIC program that allows the user to investigate the hydraulic performance of a culvert *system*. A culvert *system* is composed of the actual hydraulic structure or structures as well as hydrological inputs, storage and routing considerations, and energy dissipation devices and strategies.

HY8 automates the methods presented in HDS-5, "Hydraulic Design of Highway Culverts," HEC-14, "Hydraulic Design of Energy Dissipators for Culverts and Channels," HDS-2, "Hydrology," and information published by pipe manufacturers pertaining to the culvert sizes and materials.

HY8 is composed of four different program modules. They are: 1) Culvert Analysis and Design, 2) Hydrograph Generation, 3) Hydrograph Routing, and 4) Energy Dissipation.

- *Culvert Analysis and Design*. Culvert hydraulics can be determined for circular, rectangular, elliptical, arch, and user-defined geometry. HY8 can analyze as many as six parallel culvert systems simultaneously, each having different inlets, inlet elevations, outlets, outlet elevations, lengths, materials, and cross-sectional shape characteristics, can be analyzed.

- *Hydrograph Generation/Routing*. Storm hydrographs can be generated which are used singly or as input into culvert routing analyses. The generated hydrograph, along with the culvert data, can be used by HY8 to calculate storage and outflow hydrograph characteristics. The routing is performed by application of the storage indication (modified Puls) method.

- *Energy Dissipation*. HY8 can also design and analyze energy dissipation structures at the outlet of a culvert. Options include: external dissipators, internal dissipators, and estimating scour hole geometry.

### 11.1.5 HYCHL

*HYCHL* is a channel lining analysis and design program. The basis for program algorithms are FHWA's HEC-15, "Design of Roadside Channels with Flexible Linings," and HEC-11, "Design of Riprap Revetment." Some of the options and analyses the program performs include:

- *Stability Analysis*. HYCHL can analyze drainage channels for stability given design flow and channel conditions (i.e., slope, shape, and lining type).

- *Maximum Discharge*. The maximum discharge a particular channel lining can convey can be calculated based on the permissible shear stress of the lining.

- *Multiple Lining Types*. HYCHL can perform analysis on rigid (concrete) or flexible linings. Flexible linings include a variety of temporary and permanent lining types. In addition to analysis of single linings, composite linings can also be analyzed.

- *Alternative Channel Shapes*. Channel cross sections available in HYCHL include trapezoidal, parabolic, triangular, triangular with rounded bottom, and irregular (user-defined) shapes.

- *Constant on Variable Channel Inflow*. HYCHL can evaluate the performance of channel linings using a design flow which is assumed to be either a constant for the entire channel length or a variable inflow. The variable lineal flow results in an increasing discharge with channel length.

Depending on channel function, material availability, costs, aesthetics, and desired service life, a designer may choose from a variety of lining types. Rigid linings in HYCHL include concrete, grouted riprap, stone masonry, soil cement, and asphalt. Flexible linings in HYCHL include those considered permanent as well as those considered temporary. Permanent flexible linings include vegetation, riprap,

and gabions. Riprap-lined channels can be designed or analyzed as irregular or regular channel shapes. Temporary linings include woven paper, jute mesh, fiberglass roving, straw with net, curled wood mat, synthetic mat, and bare soil (unlined).

### 11.1.6 NFF

The USGS, in cooperation with the Federal Highway Administration and the Federal Emergency Management Agency, has compiled all the current statewide and metropolitan wide regression equations into a microcomputer program entitled the National Flood Frequency (NFF) program. NFF summarizes techniques for estimating flood-peak discharges and associated flood hydrographs for a given recurrence interval or exceedence probability for unregulated rural and urban watersheds. NFF includes the regression equations for rural watersheds in each state, includes the nationwide regression equations for urban watersheds, and generates rural and urban frequency functions and hydrographs.

### 11.1.7 HYEQT

The HYDRAIN equation program (HYEQT) is an application program that allows a user to input and solve regression equations for solving peak flow (or any other formula of interest). This program can be used instead of the NFF program to allow for modification of the USGS regression equations. These equations provide estimates which engineers and hydrologists can use for planning and design applications.



## 11.2 TR-55

This program, written in BASIC, incorporates the procedures outlined in Technical Release No. 55 (TR-55). [13] TR-55 contains simplified procedures to calculate storm runoff volume, peak rate of discharge, hydrographs, and storage volumes required for stormwater reservoirs. The procedures are applicable in small urbanizing watersheds in the United States. TR-55 incorporates current Soil Conservation Service (SCS) procedures. Some of the options and analyses included in TR-55 are:

- *Estimating Runoff.* TR-55 employs the SCS Runoff Curve Number method or the Graphical Peak Discharge method to estimate peak discharges in a rural or urban watershed.

- *Time of Concentration and Travel Time.* TR-55 computes travel time for sheet flow, shallow concentrated flow, and open-channel flow. Travel time for sheet flow is estimated using Manning's kinematic solution. Travel time in open channels is evaluated by applying Manning's equation.

- *Tabular Hydrograph Method.* The Tabular Hydrograph method can develop partial composite flood hydrographs at any point in a watershed by dividing the watershed into homogeneous subareas.

- *Storage Volume for Detention Basins.* TR-55 can also estimate detention basin storage volume.

TR-55 is interactive with menus which prompt the user for specific inputs. Several screens of input are normally required before an analysis can proceed. Help screens assist the user in successfully performing an analysis.

TR-55 is a hydrology program which implements Soil Conservation Service methods for calculating time of concentration, peak flows, hydrographs, and detention basin storage volumes. It is applicable to urban drainage situations where detailed hydrograph routing procedures are not warranted. TR-55 is extremely easy to use, with interactive menu input and help messages available to the user.

## 11.3 TR-20

The TR-20 program provides for hydrographic analyses of a watershed under present conditions and various combinations of land cover/use and structural or channel modifications using single rainfall events. It is based on the Soil Conservation Services' Technical Release 20.[78] Output consists of runoff peaks and/or flood hydrographs, their time of occurrence and water surface elevations at any desired cross section or structure. Subarea surface runoff hydrographs are developed from storm rainfall using an SCS dimensionless unit hydrograph, drainage areas, times of concentration, and SCS runoff curve numbers. Hydrographs can be developed, routed, added, stored, diverted, or divided to convey floodwater from the headwaters to the watershed outlet.

The following is a summary of the options and analyses employed by TR-20.

- *Runoff Volume.* A mass curve of runoff is developed for each subwatershed. The runoff curve number (CN), rainfall volume, and rainfall distribution are the input variables needed to determine this mass curve. Curve numbers are determined by the user for each subwatershed based on soil, land use, and hydrologic condition information. The runoff volume is computed using the SCS runoff equation. The program can develop and route the runoff from as many as nine different rainfall distributions and ten different storms for each rainfall distribution. Runoff depths and durations will be developed and routed for a rainfall distribution defined in either dimensionless units or actual time units.

- *Hydrograph Development.* An incremental unit hydrograph is developed for each subwatershed. The unit hydrograph time increment is calculated as a function of the time of concentration. The incremental runoff volume is determined for each time increment. The composite flood hydrograph is computed by summing the incremental hydrograph ordinates. A maximum of 300 ordinates (discharge values) can be stored for any composite flood hydrograph. The peak flow value of the composite flood hydrograph is computed by a separate routine that utilizes the Gregory-Newton forward difference formula for fitting a second degree polynomial through the three largest consecutive hydrograph values saved at the main time increment. In multiple peaked hydrographs up to ten peaks may be computed.

- *Reservoir Routing.* The composite flood hydrograph is routed through a reservoir using the Storage-Indication method. The program can route a hydrograph through up to 99 structures and an unlimited number of variations for each structure.

- *Reach Routing.* The composite flood hydrograph is routed through a valley reach using a Modified Attenuation-Kinematic (Att-Kin) method. TR-20 can route through up to 200 stream reaches and an unlimited number of channel modifications for each reach.

TR-20 is written in FORTRAN IV computer language. Input files are created by stringing together the appropriate statement types. Once an input file is created, the program is executed and output is written to a separate file. Use of the program requires knowledge of the cumbersome input data structure.

TR-20 is a comprehensive hydrology program which implements Soil Conservation Service methods for generating and routing runoff hydrographs in a multibasin watershed. It is applicable to only larger watersheds where detailed hydrograph routing is warranted. TR-20 is more difficult to use than other programs since it does not include an input shell to prompt the user for data.

## 11.4 HEC-1

HEC-1 is a flood hydrograph package developed by the U.S. Corps of Engineers. [79] The HEC-1 model, like TR-20, is designed to simulate the surface runoff response of a river basin to precipitation by representing the basin as an interconnected system of hydrologic and hydraulic components. Each component models an aspect of the precipitation-runoff process within a portion of the basin. A component may represent a surface runoff entity, a stream channel, or a reservoir. Representation of a component requires a set of parameters which specify the particular characteristics of the component and mathematical relations which describe the physical processes. The result of the modeling process is the computation of streamflow hydrographs at desired locations in the river basin.

HEC-1 is a very detailed model used for deriving streamflow hydrographs. The model simulates a river basin as a group of subareas interconnected through channel routing reaches and confluences. HEC-1 performs hydrologic calculations on a user specified time step for a single storm (soil moisture recovery during dry spells is not included). HEC-1 is used to generate discharge, not water surface elevations (although it does calculate normal depth). The HEC-2 model is typically used in conjunction with HEC-1 to determine water surface profiles through detailed hydraulic computations. The following summarizes the major components of HEC-1:

- *Precipitation.* A precipitation hyetograph is used as input for all runoff calculations. Precipitation data for an observed event can be user-supplied or synthetic storms can be used. Snowfall and snowmelt can also be considered.

- *Hydrographs.* There are three synthetic unit hydrograph methods in the HEC-1 model, including the Clark unit hydrograph, the Snyder unit hydrograph, and the SCS dimensionless unit hydrograph. User-defined unit hydrographs can be entered directly.

- *Flood Routing.* Flood routing can be computed by a variety of methods, including Muskingum, Muskingum-Cunge, kinematic wave, modified Puls, working R and D, and level-pool reservoir routing.

- *Flood Damage/Flood Control System Optimization.* The reservoir component of the HEC-1 model is employed in a stream network model to simulate dam failure. HEC-1 also has a flood control system optimization option which is used to determine optimal sizes for the flood loss mitigation measures in a river basin flood control plan.

HEC-1 is a widely used surface runoff model which was first developed in 1968 and has undergone several revisions over the years. New capabilities of the most recent version include database management interfaces and a graphics program which allows plots of information stored in the HEC-1 database. In addition, a user-friendly input program is available to help first-time users of HEC-1. The program helps the user to assemble the correct sequence of records for a HEC-1 input file.

HEC-1, like TR-20, is a comprehensive hydrology program which implements various hydrologic methods for generating and routing runoff hydrographs in a multibasin watershed. It is applicable to only

larger watersheds where detailed hydrograph routing is warranted. HEC-1 is easy to use, providing a user-friendly program for developing input data sets.

## 11.5 SWMM

The Storm Water Management Model (SWMM), developed by the Environmental Protection Agency (EPA), is a comprehensive mathematical model for simulation of urban runoff quantity and quality in storm and combined sewer systems. [80] The model simulates all aspects of the urban hydrologic and quality cycles, including surface runoff, transport through the drainage network, storage and treatment, and receiving water effects.

SWMM simulates real storm events on the basis of rainfall (hyetograph) and other meteorological inputs and system (catchment, conveyance, storage/treatment) characterization to predict outcomes in the form of quantity and quality values. The model is structured to perform runoff computations, transport and fate functions, and water quality and cost computations.

The SWMM is made up of many different components or "blocks" which perform various functions. Those blocks are: Runoff, Transport, Storage Treatment, EXTRAN, and five other "service" blocks related to data preparation.

- *Runoff Block.* The runoff portion of SWMM can simulate both the quantity and quality of runoff from a drainage basin and the routing of flows and contaminants to the major sewer lines. Drainage basins are represented by an aggregate of idealized subcatchments and gutters or pipes. The program accepts an arbitrary rainfall or snowfall hyetograph and makes a step-by-step accounting of snow melt, infiltration losses, impervious areas, surface detention, overland flow, channel flow, and the constituents washed into inlets, leading to the calculation of inlet hydrographs and pollutographs.

- *Transport Block.* Routing is performed by SWMM in the transport "block" portion of the program. Both quantity and quality parameters are routed through a sewer system. Quantity routing follows a kinematic wave approach. Up to four contaminants can be routed. Storage routing is accomplished by the modified Puls method.

- *Storage/Treatment Block.* The storage/treatment block simulates the routing of flows and pollutants through a dry or wet weather storage/treatment plant containing up to five units or processes. Each unit may be modeled as having detention or non-detention characteristics, and may be linked in a variety of configurations. Sludge handling may also be modeled using one or more units.

- *EXTRAN Block.* [81] EXTRAN is a hydraulic flow routing model for open channel and/or closed conduit systems. The EXTRAN Block receives hydrograph input at specific nodal locations by interface file transfer from an upstream block (e.g., the Runoff Block) and/or by direct user input. The model performs dynamic routing of stormwater flows throughout the major storm drainage system to the points of outfall to the receiving water system. The program will simulate branched or looped networks, backwater due to tidal or nontidal conditions, free-surface flow, pressure flow or surcharge, flow reversals, flow transfer by weirs, orifices and pumping facilities, and storage at on- or off-line facilities. Types of channels that can be simulated include circular, rectangular, trapezoidal, parabolic, natural channels, and others. Simulation output takes the form of water-surface elevations and discharge at selected system locations.

SWMM is a very complicated model with many features. Initial model setup is difficult due to extensive data requirements. Data assembly and preparation can require multiple man-months for a large catchment or urban area. The model is frequently updated, with new releases coming on a biannual basis (approximately). Updated user's manuals and test cases are documented in published EPA reports.

SWMM can handle almost all aspects of hydrology, runoff water quality, and hydraulics of an urban drainage system. It is applicable to only the largest and most complex storm drain systems where extremely detailed hydrology or water quality analysis is required. SWMM is very difficult to use and requires extensive input data.

## 11.6 HYDRAULIC TOOLBOX

Hydraulic toolbox is a collection of four hydraulics programs written in BASIC. They are referred to as the following: (1) HY12, (2) HY15, (3) BASIN, and (4) SCOUR.

- *HY12.* HY12 uses the design procedures of Hydraulic Engineering Circular No. 12, (HEC #12), "Drainage of Highway Pavements." The program analyzes the flow in gutters and the interception capacity of grate inlets, curb-opening inlets, slotted drain inlets, and combination inlets on continuous grades and in sags. Both uniform and composite cross-slopes can be analyzed.

- *HY15.* The HY15 program applies the methodologies in Hydraulic Engineering Circular No. 15, (HEC-15), "Design of Roadside Channels with Flexible Linings." HY15 analyzes the hydraulic performance of flexible and concrete channel linings for trapezoidal or triangular channels in straight reaches. The design procedures are based on the concept of maximum permissible tractive force, where channel lining stability is determined by comparing the hydraulic forces exerted on the lining with the maximum permissible shear stress a particular lining can sustain.

- *BASIN.* BASIN is a riprap design program which analyzes the adequacy of riprap-lined basins at the outlet of culverts.

- *SCOUR.* The SCOUR program provides estimates of the scour at the outlet of culverts in terms of depth, width, length, and volume.

The programs in this package are simple and easy to use. Input screens prompt the user for all necessary information to perform an analysis, but there is no on-line user help. Although no supporting documentation exists, related references to the methodologies should provide an adequate theoretical basis for proper application.

Hydraulic toolbox evaluates gutter and inlet hydraulics, flexible channel lining design, riprap stilling basin design, and culvert outlet scour. It is applicable to analysis of the aforementioned drainage components of an individual basis - this is not a tool for modeling hydraulic systems. Hydraulic toolbox is relatively easy to use, providing input screens. No on-line help messages are available to the user.

## 11.7 URBAN DRAINAGE DESIGN SOFTWARE

The Urban Drainage Design Software is a collection of three hydraulic programs written in BASIC. It includes: (1) Manning's equation for various channel shapes, (2) HEC-22 (Storm Drain Design), and (3) Stormwater Management.

- *Manning's Equation.* The Manning's equation program computes flow through circular, trapezoidal, and triangular channel shapes. Open-channel flow is solved by application of the Manning's equation. Critical depths are also computed by this program.

- *HEC-22.* This is a pavement drainage program which applies the principles of Hydraulic Engineering Circular No. 22. The program allows for analysis of gutter flow, grates, curb openings, combination inlets, inlets in a sump, and median and side ditches. Both uniform and composite cross slopes can be analyzed.

- *Stormwater Management.* This program provides options for computing stage-storage curves for circular pipes, trapezoidal basins, irregular basins, and rectangular basins. There is also an option for reservoir routing using the Storage Indication method. Reservoir routing is one of the main applications of this software.

The programs in this package are basic, straightforward hydraulics computation algorithms which are quick and easy to apply. The programs are menu-driven, prompting the user for all necessary data. Although no supporting documentation exists, related references to the methodologies should provide an adequate theoretical basis for proper application.

Urban Drainage Design Software evaluates normal depth flow conditions, gutter and inlet hydraulics, and stormwater management pond hydrograph routing. Like the Hydraulic toolbox, this software is applicable to analysis of individual drainage components - this is not a tool for modeling hydraulic systems. The software is relatively easy to use, providing input screens. No on-line messages are available to the user.



## 11.8 DR3M

The Distributed Routing Rainfall-Runoff Model (DR3M), developed by the USGS, is a watershed model for routing storm runoff through a branched system of pipes and/or natural channels.[83] The model provides detailed simulation of storm-runoff periods and a daily soil-moisture accounting between storms. Drainage basins are represented as sets of overland-flow, channel, and reservoir segments which together describe the drainage features of the basin. The kinematic wave theory is used for routing flows over contributing overland-flow areas and through channel networks. A set of model segments can be arranged into a network that will represent many complex drainage basins. The model is intended primarily for application to urban watersheds.

- *Rainfall-Excess Components.* The rainfall-excess components of the model are more complex than runoff methods discussed in this report, and include soil-moisture accounting, pervious area rainfall excess, impervious area rainfall excess, and parameter optimization. The soil-moisture accounting component determines the effect of antecedent conditions on infiltration. Soil moisture is modeled as a dual storage system, one representing the antecedent base-moisture storage, and the other representing the upper-zone storage caused by infiltration into a saturated moisture storage. Pervious-area rainfall excess is determined as a function of the point potential infiltration. In the model, point potential infiltration is computed using the Green-Ampt equation.

  Two types of impervious surfaces are considered by the model. The first type, effective impervious surfaces, are those impervious areas that are directly connected to the channel drainage system. Roofs that drain into driveways, streets, and paved parking lots that drain onto streets are examples of effective impervious surfaces. The second type, noneffective impervious surfaces, are

those impervious areas that drain to pervious areas. An example of this type would be a roof that drains onto a lawn.

- *Routing.* DR3M has the capability to perform routing calculations through application of the kinematic wave theory. The model approximates the complex topography and geometry of a watershed as a set of segments which jointly describe the drainage features of a basin. There are four types of segments which include overland-flow segments, channel segments, reservoir segments, and nodal segments.

DR3M can be used for a wide variety of applications. A set of model segments can be arranged easily into a network that will represent simple or complex drainage basins. The model can be applied to drainage basins ranging from tens of hectares to several square kilometers but not to exceed 25 $km^2$.

DR3M can be used for urban basin planning purposes by its determination of the hydrologic effects of different development configurations. Examples of this type of application include assessing the effects of increased impervious cover, detention ponds, or culverts on runoff volumes and peak flows.

The Distributed Routing Rainfall-Runoff Model (DR3M) is a comprehensive drainage system simulation tool. It is applicable to analysis of both simple and complex hydraulic systems. DR3M has menu driven input screens and help messages available to the user through ANNIE, but the model is complex and requires extensive input data. DR3M, like SWMM, should only be considered for the most complex hydrologic and hydraulic systems.



## 11.9 EVALUATION OF WATER QUALITY

This water quality program is the computer implementation of FHWA-RD-006/009, "Pollutant Loadings and Impacts from Highway Stormwater Runoff." [84] This software characterizes runoff water quality and estimates impacts to streams and lakes. The user defines the site characteristics and the pollutant target concentrations. The model then determines expected runoff concentration given a user defined exceedence probability (50th percentile is the site median concentration which is the default setting). The default concentrations included in the model are based on extensive monitoring data—993 storm events at 31 highway sites in 11 states. Impact analysis is then performed for the stream (dilution modeling) or lake (Vollenweider model of phosphorus concentration only). If the computed concentration exceeds the target, the user can evaluate load reductions with the following controls: grass channel, overland flow, wet ponds, and infiltration.

This software is simple and easy to use. Input screens prompt the user for all necessary information. Documentation for the software is adequate, while documentation for the underlying procedures is extensive through the aforementioned FHWA reports.

The FHWA highway pollutant loading model estimates the highway runoff load for a number of different pollutants, evaluates the impacts of pollutant load on a receiving stream or lake, and can estimate the water quality improvements with various best management practices. The model is based on a number of simplifying assumptions, but is generally applicable to water quality evaluation for all but the most environmentally sensitive highway projects. The software is relatively easy to use, providing input screens. No on-line help messages are available but the documentation is adequate.

## 11.10 SOFTWARE AVAILABILITY

The following lists where each of the models summarized in this chapter can be obtained.

- **HYDRAIN**

  McTrans Center
  University of Florida
  Tallahassee, Florida
  (800) 226-1013

- **TR-55**

  National Technical Information Service
  U.S. Department of Commerce
  5285 Port Royal Road
  Springfield, Virginia 22161
  (703) 487-4600

- **TR-20**

  National Technical Information Service
  U.S. Department of Commerce
  5285 Port Royal Road
  Springfield, Virginia 22161
  (703) 487-4600

- **HEC-1**

  U.S. Army Corps of Engineers
  Hydrologic Engineering Center
  609 Second Street
  Davis, California 95616
  (916) 756-1104

- **SWMM**

  National Technical Information Service
  U.S. Department of Commerce
  5285 Port Royal Road
  Springfield, Virginia 22161
  (703) 487-4600

- **DR3M**

  United States Department of the Interior
  U.S. Geological Survey
  Reston, Virginia 22092

- **Hydraulic Toolbox**

  McTrans Center
  University of Florida
  Tallahassee, Florida
  (800) 226-1013

- **Urban Drainage Design**

  McTrans Center
  University of Florida
  Tallahassee, Florida
  (800) 226-1013

- **Evaluation of Water Quality**

  Federal Highway Administration
  Office of Environment and Planning
  400 Seventh Street, SW
  Washington, DC 20590
  (202) 366-5004

## APPENDIX A. LIST OF CHARTS

# CHART 1

$$Q = \frac{0.376}{n} S_x^{1.67} S^{0.5} T^{2.67}$$

EXAMPLE:

GIVEN: $n=0.016$; $S_x=0.03$
$S=0.04$; $T=1.83m$

FIND: $Q=0.068\ m^3/s$
$Qn=0.0011\ m^3/s$

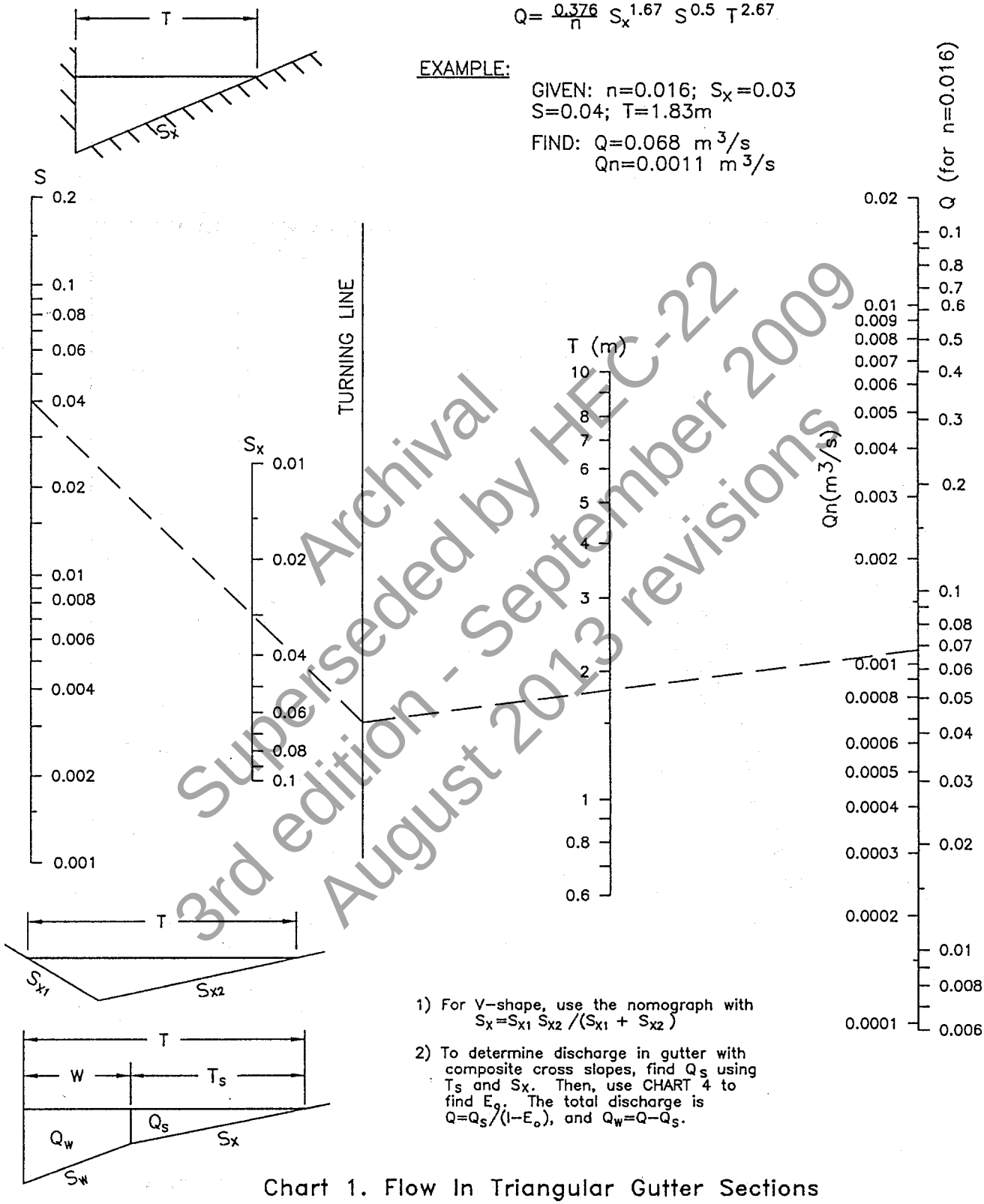


1) For V-shape, use the nomograph with $S_x = S_{x1} S_{x2} / (S_{x1} + S_{x2})$

2) To determine discharge in gutter with composite cross slopes, find $Q_s$ using $T_s$ and $S_x$. Then, use CHART 4 to find $E_o$. The total discharge is $Q=Q_s/(1-E_o)$, and $Q_w=Q-Q_s$.

Chart 1. Flow In Triangular Gutter Sections

# CHART 2

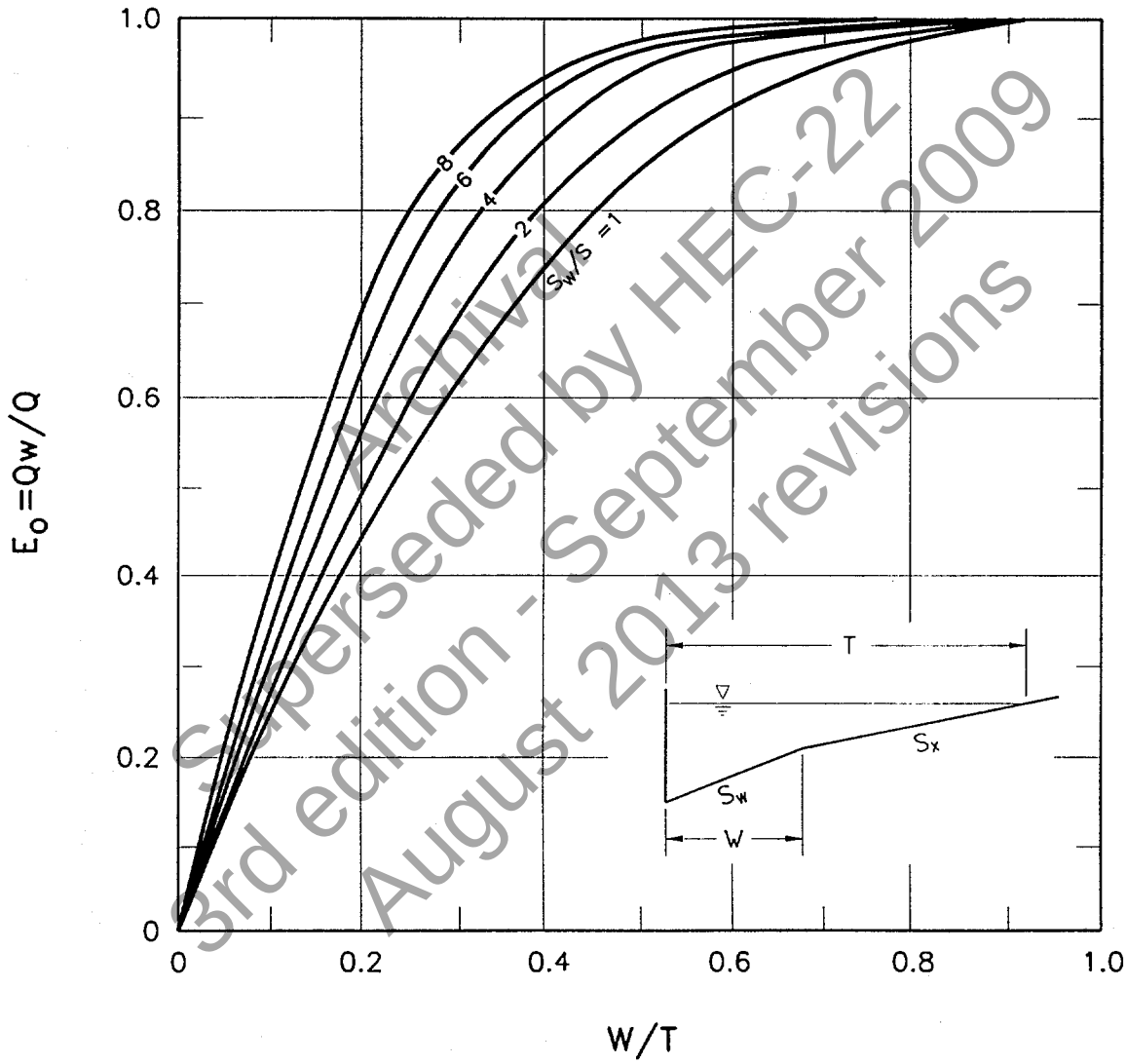




Chart 2. Ratio of Frontal Flow to Total Gutter Flow

# CHART 3

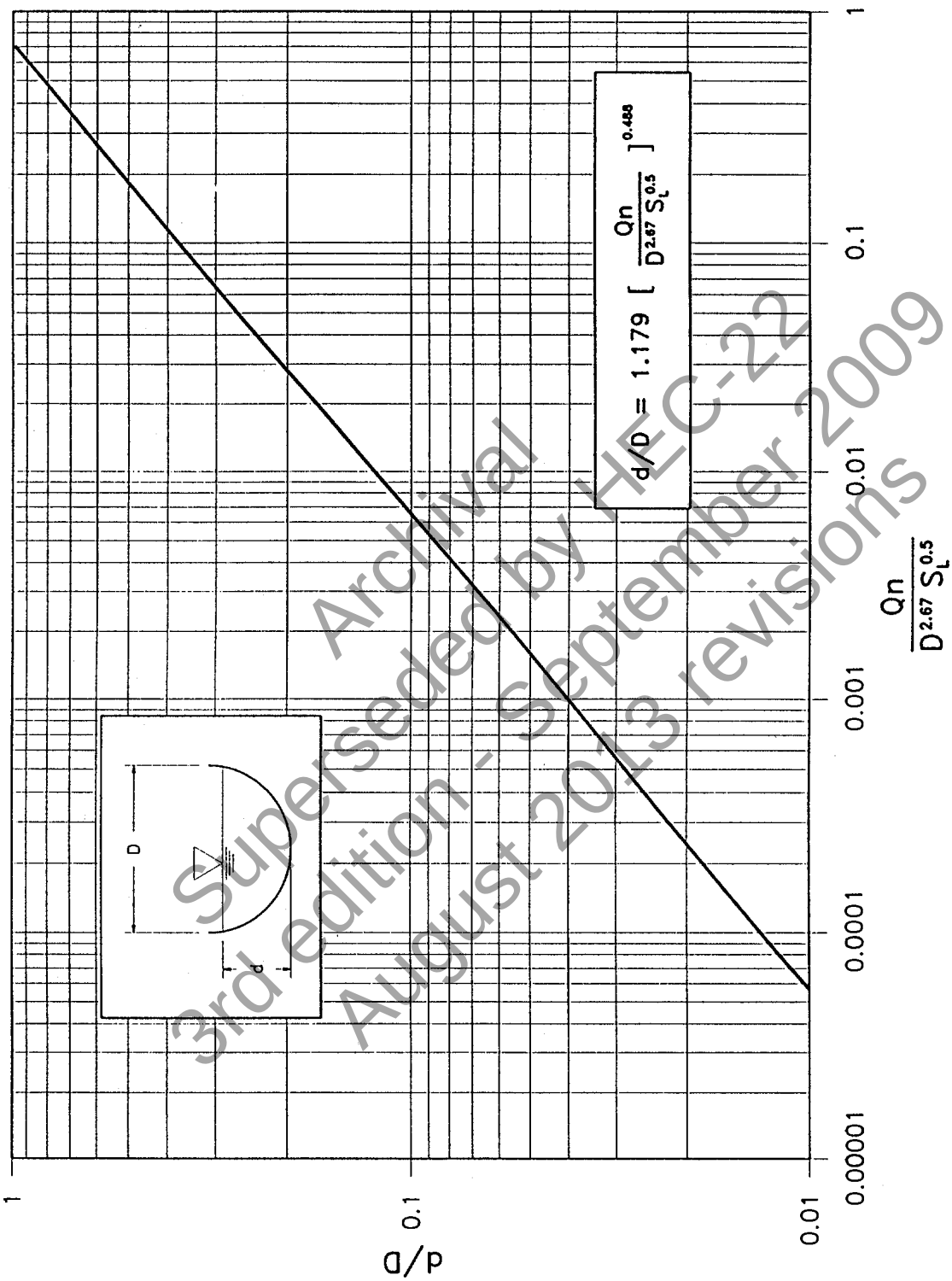


Chart 3. Conveyance In Circular Channels.

# CHART 4

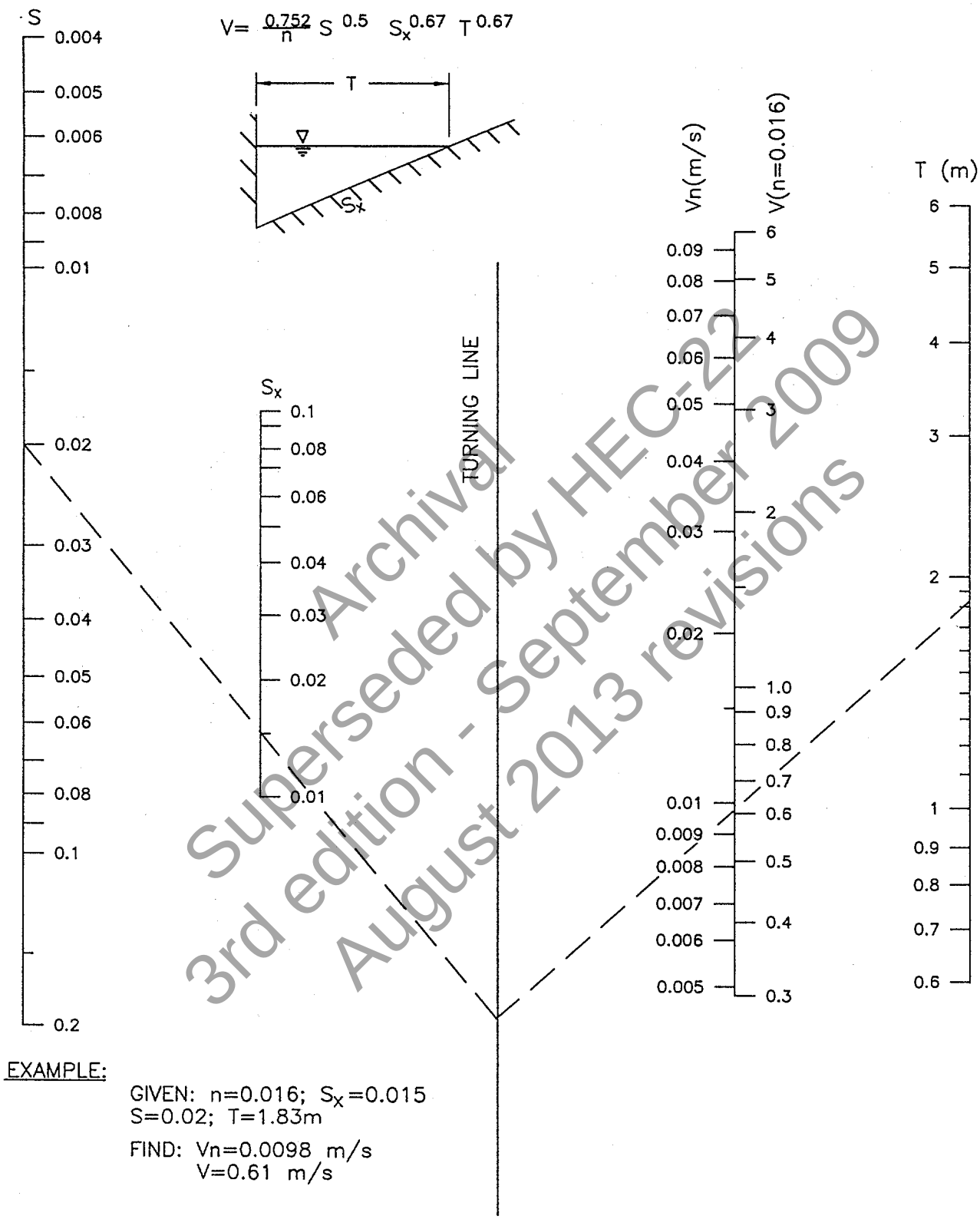


EXAMPLE:

GIVEN: n=0.016; $S_x$=0.015
S=0.02; T=1.83m

FIND: Vn=0.0098 m/s
V=0.61 m/s



Chart 4. Velocity in Triangular Gutter Sections

# CHART 5

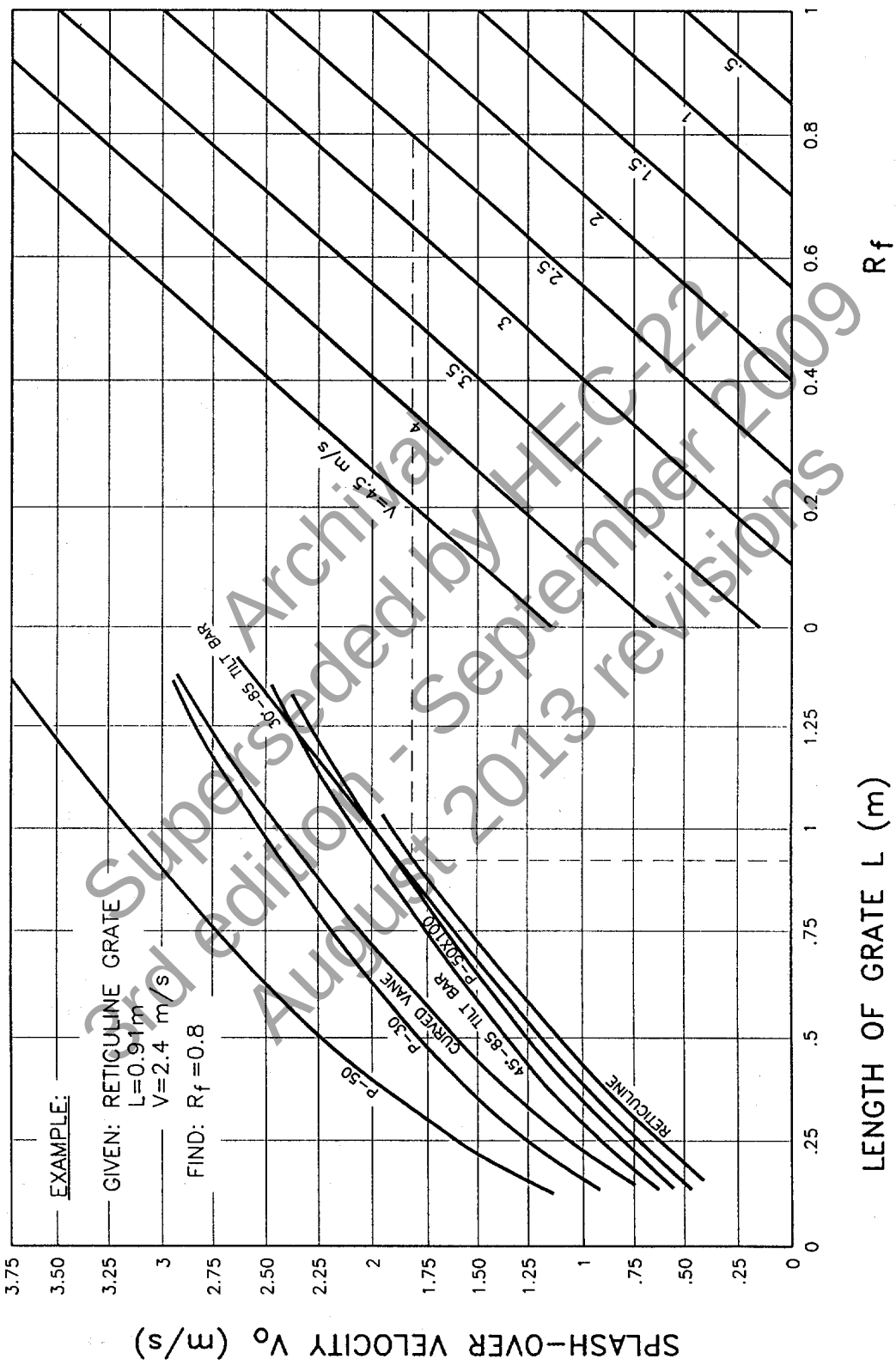


Chart 5. Grate Inlet Frontal Flow Interception Efficiency

# CHART 6

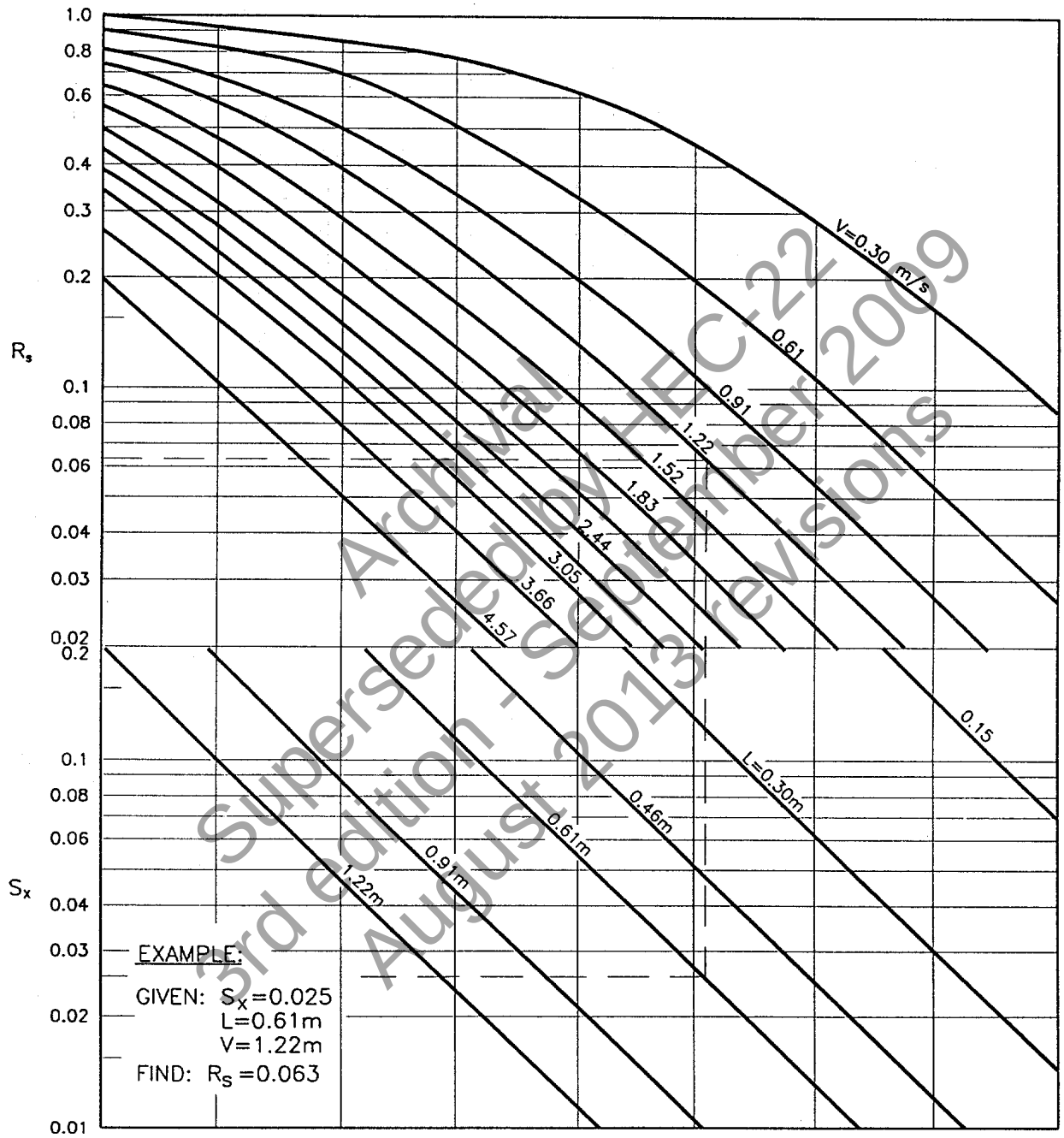




Chart 6. Grate Inlet Side Flow Intercept Efficiency.

# CHART 7

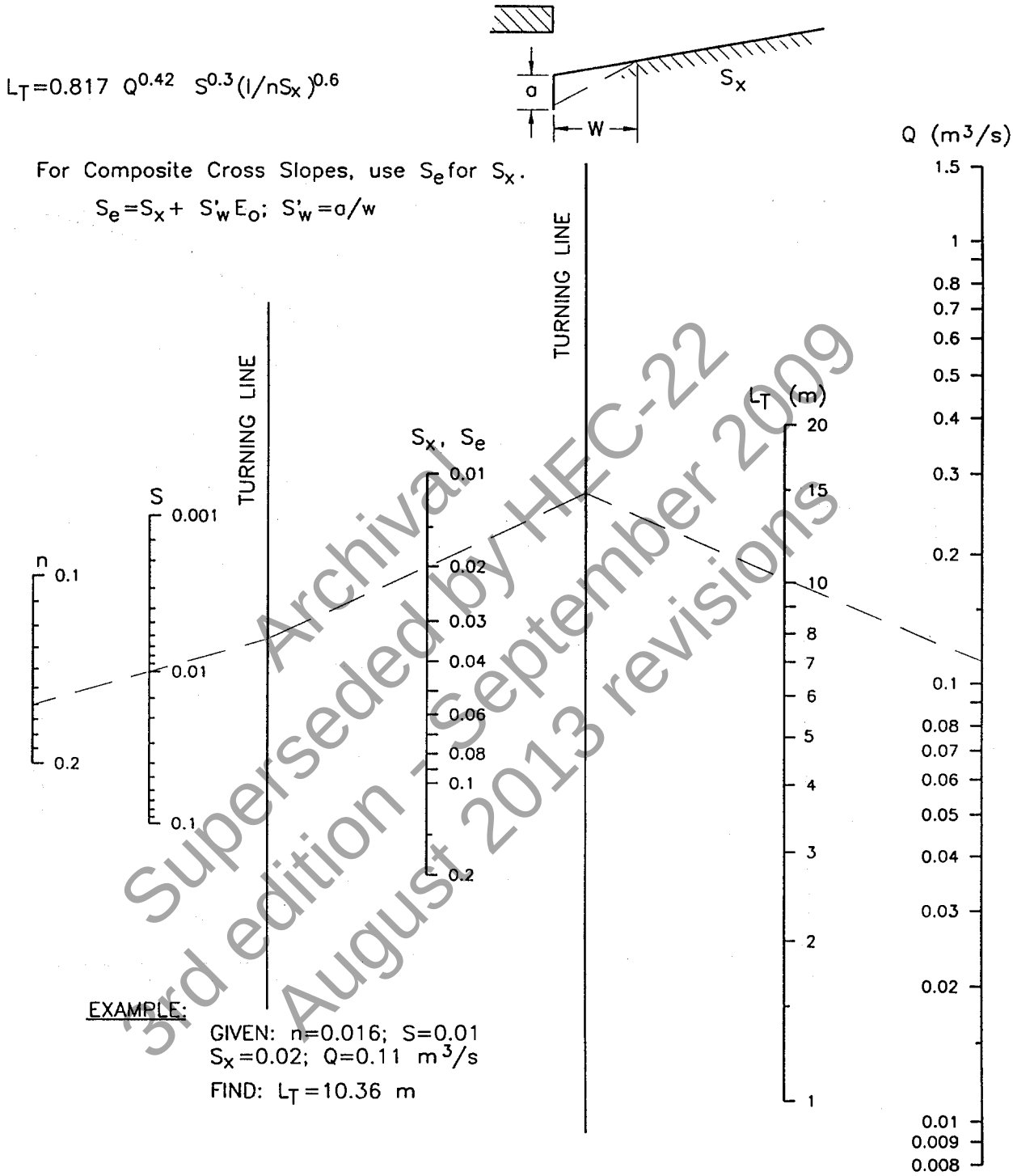




Chart 7. Curb-opening Slotted Drain Inlet Length for Total Interception.

# CHART 8

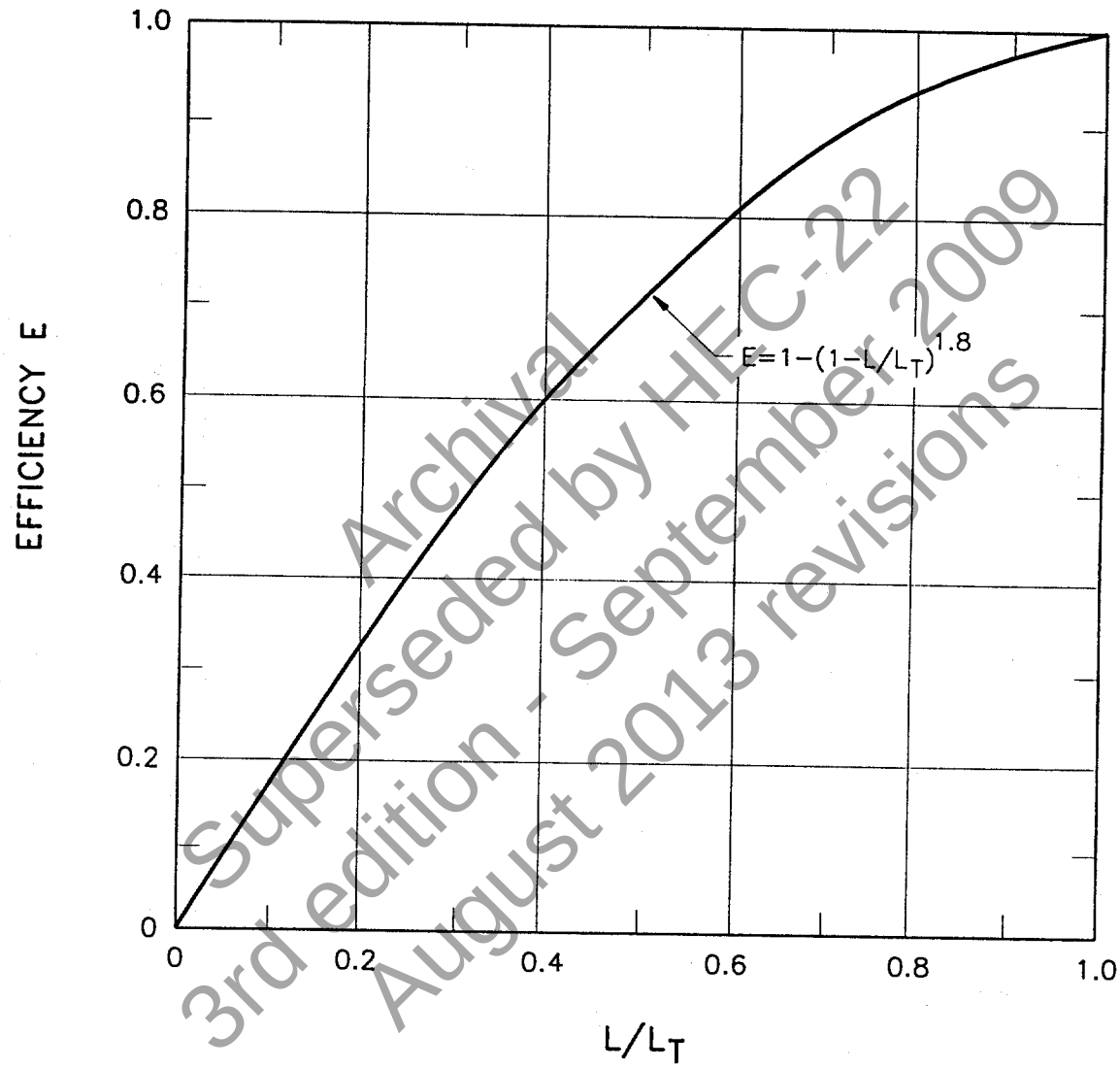




Chart 8. Curb-opening and Slotted Drain Inlet Interception Efficiency.

# CHART 9

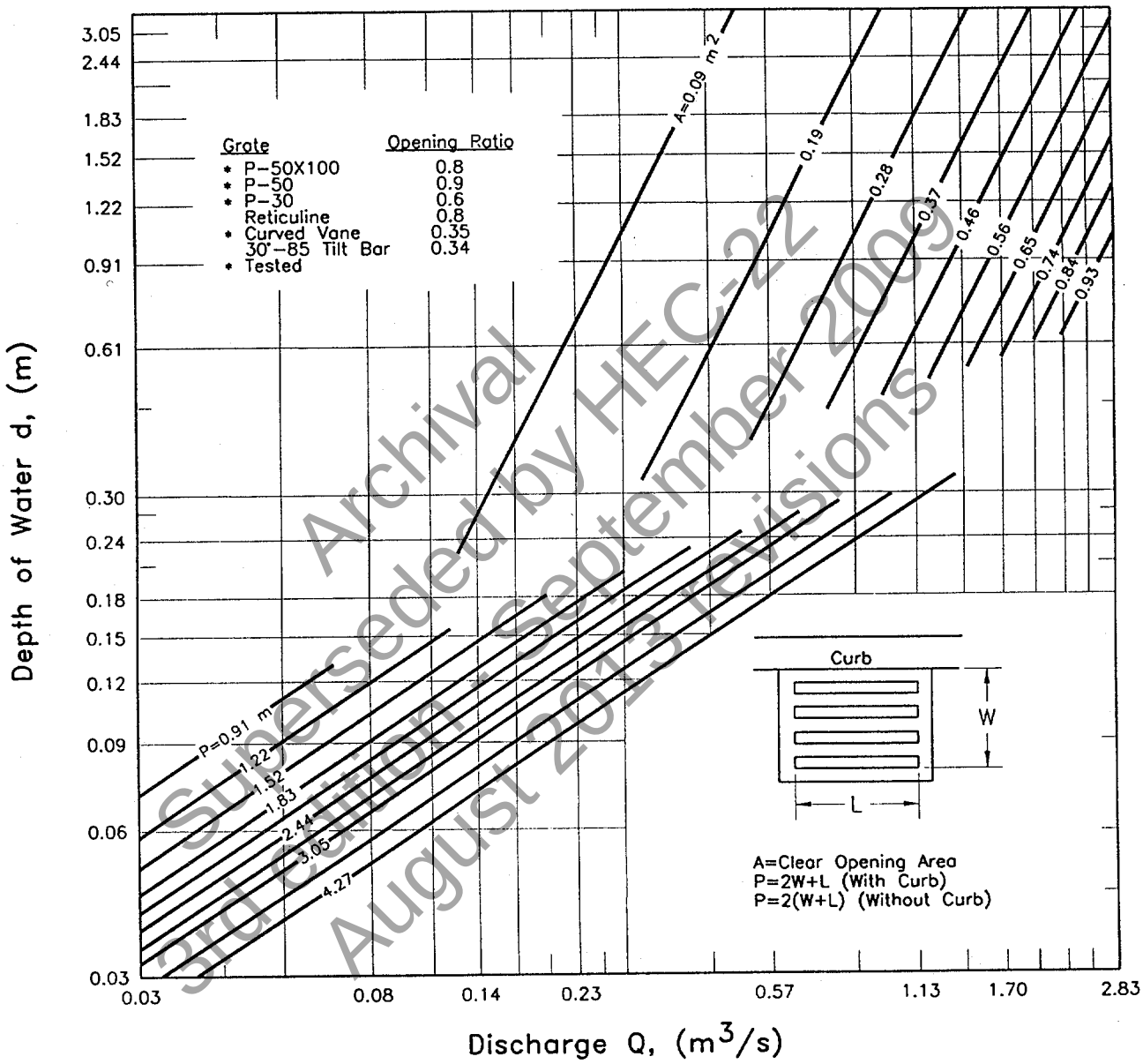




Chart 9. Grate Inlet Capacity in Sump Conditions.

# CHART 10

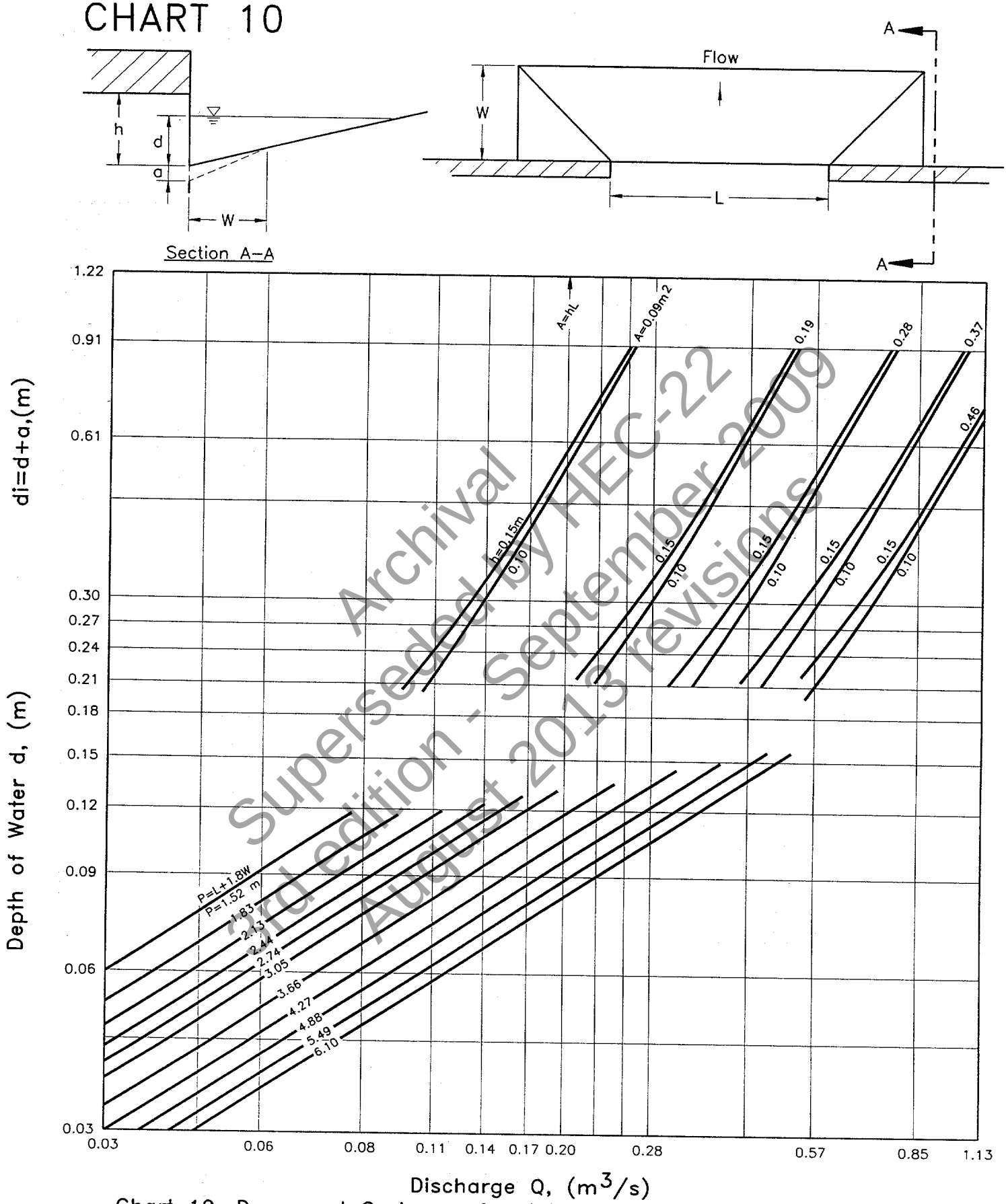




Chart 10. Depressed Curb–opening Inlet Capacity in Sump Locations

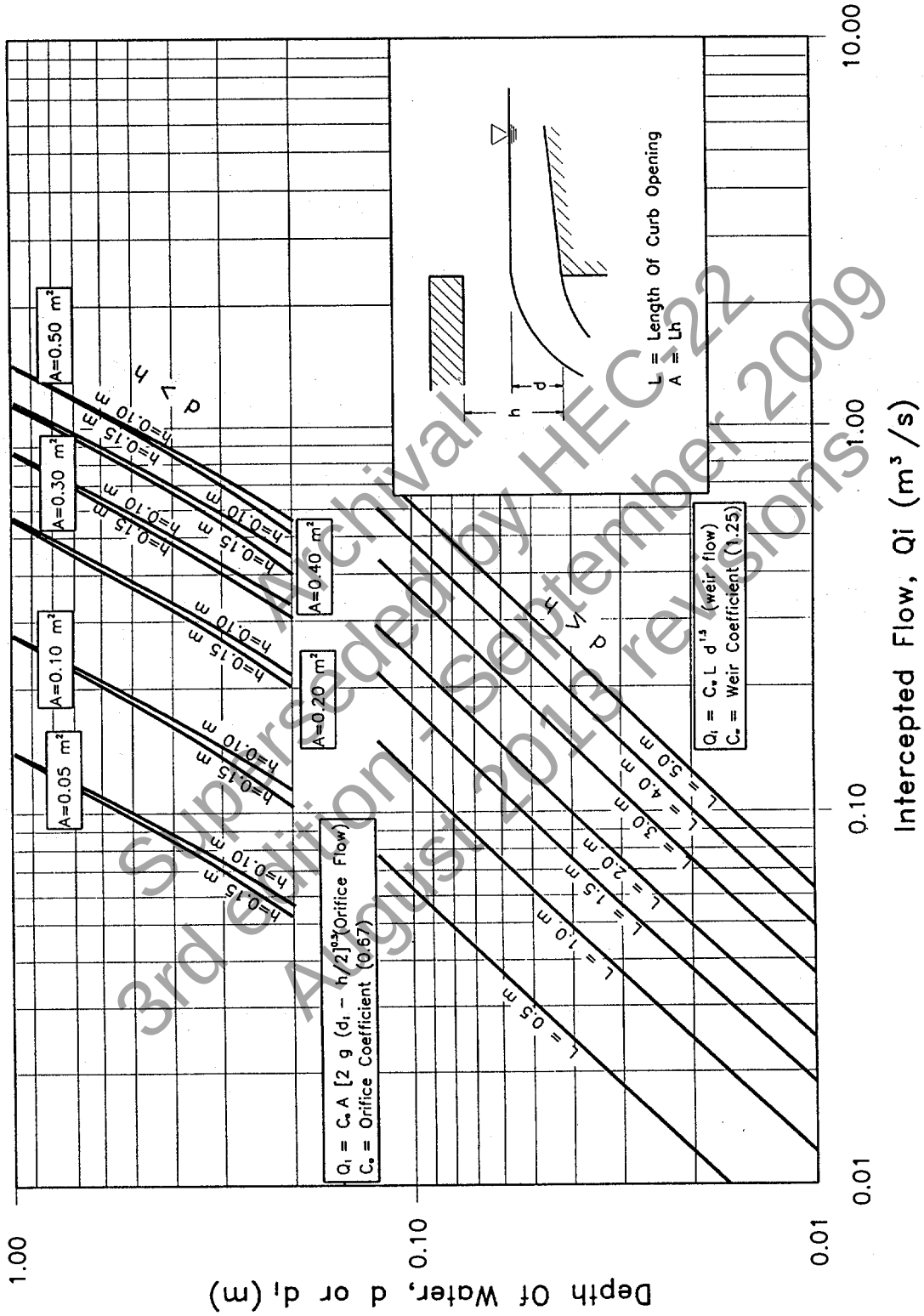


Chart 11. Curb Opening Inlet Capacity In Sump Locations.

# CHART 12

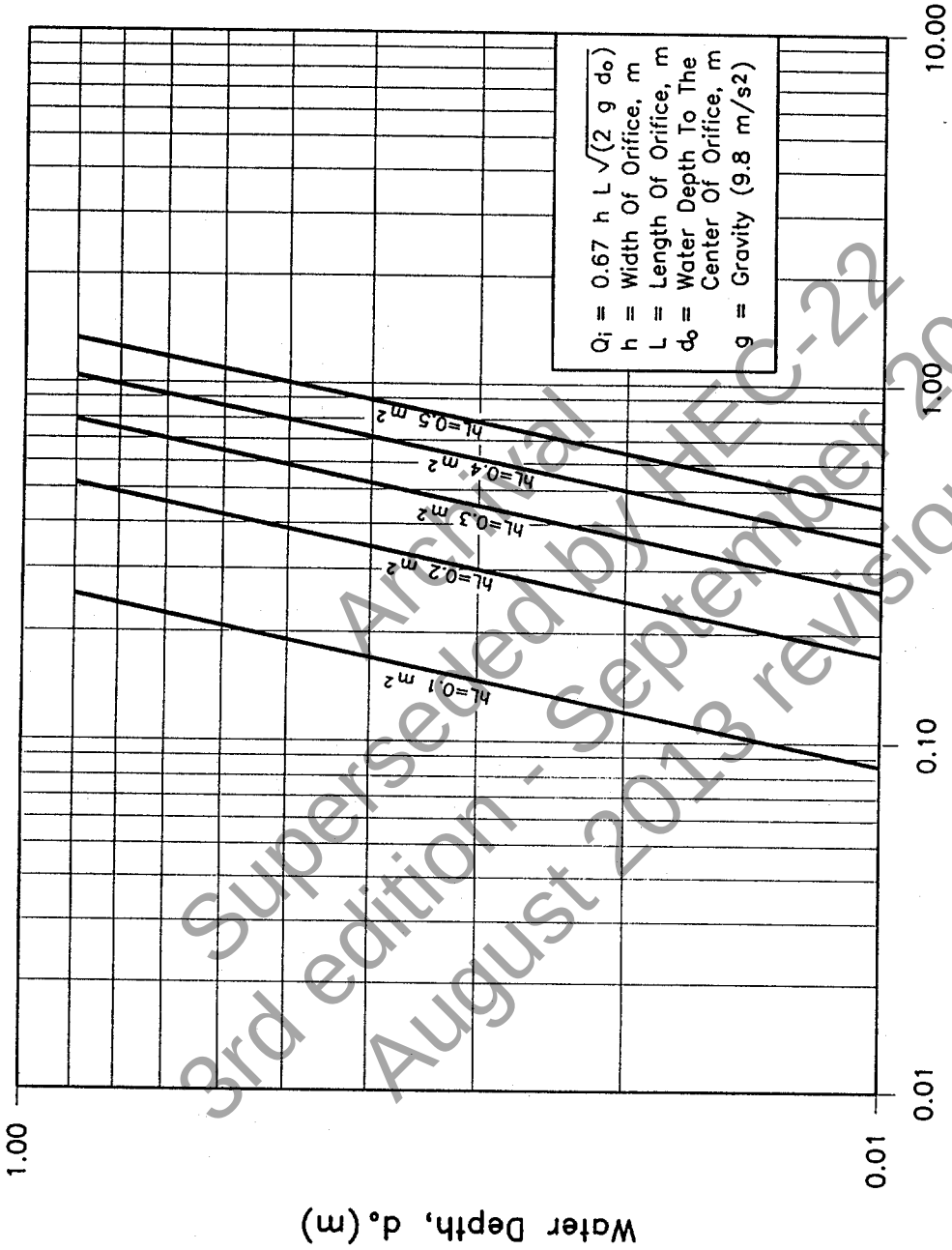


Chart 12. Curb Opening Inlet Orifice Capacity
For Inclined And Vertical Orifice Throats.

# CHART 13

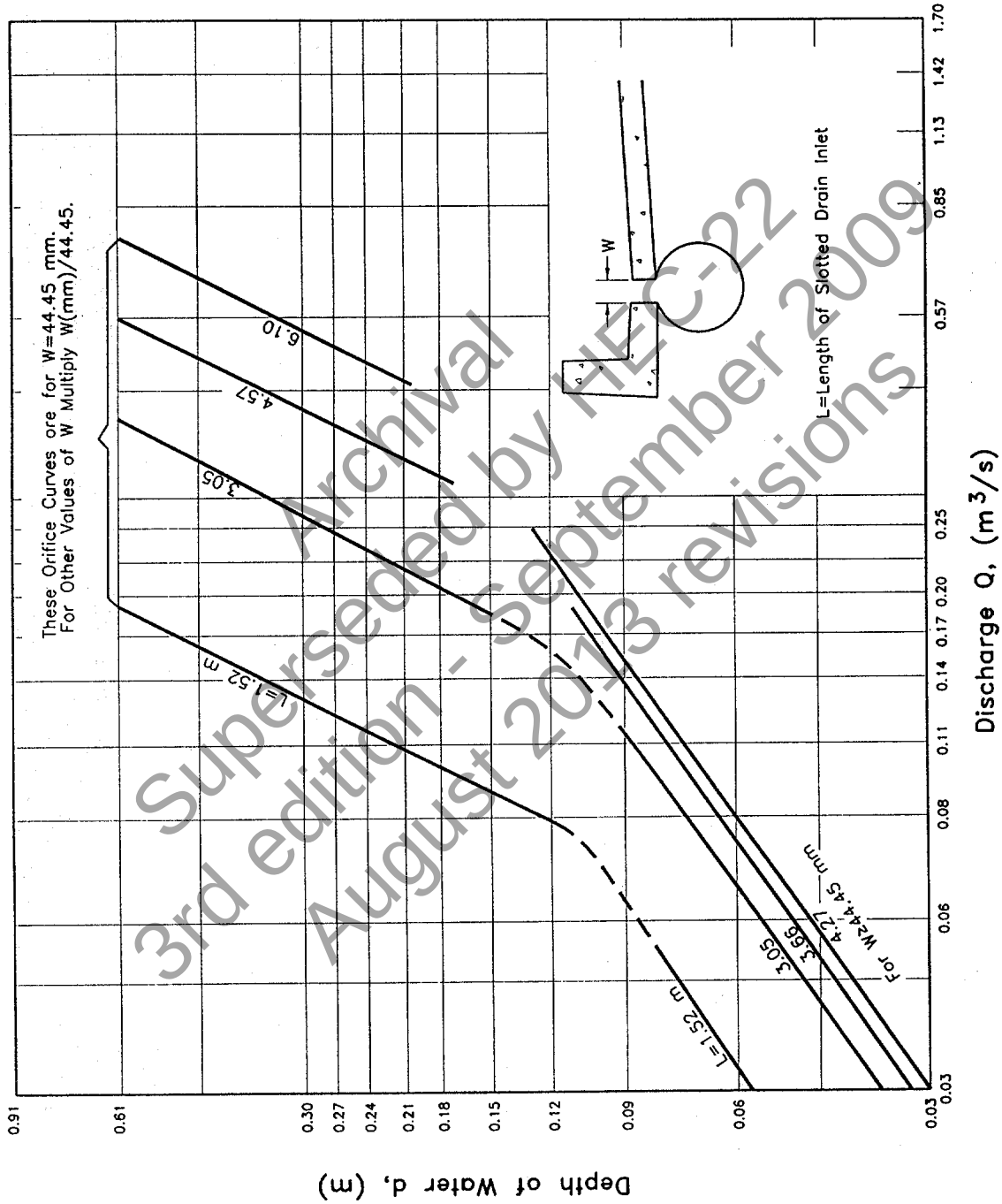


Chart 13. Slotted Drain Inlet Capacity in Sump Locations.

# CHART 14

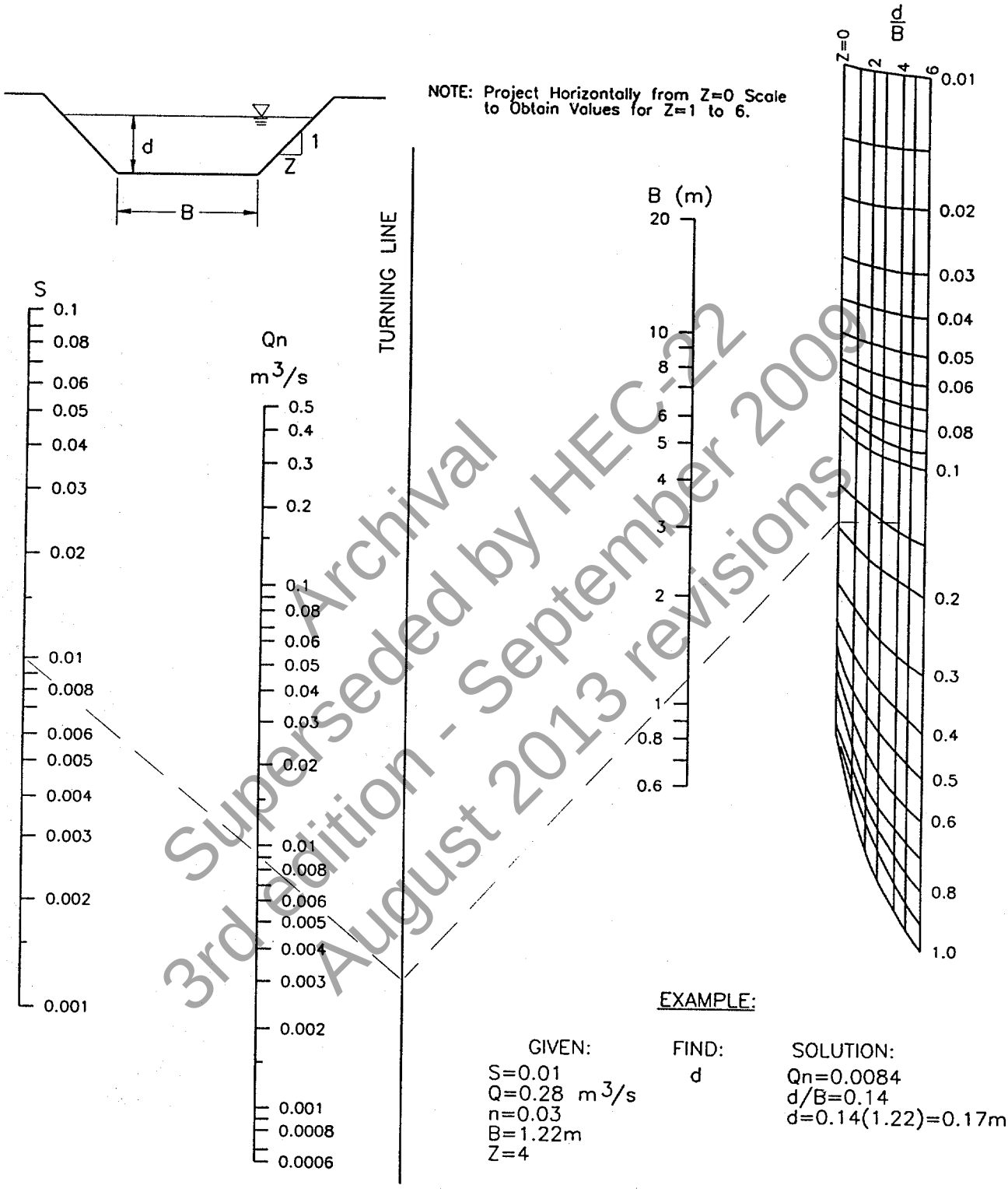




Chart 14. Solution to Manning's Equation for Channels of Various Side Slopes.

# CHART 15

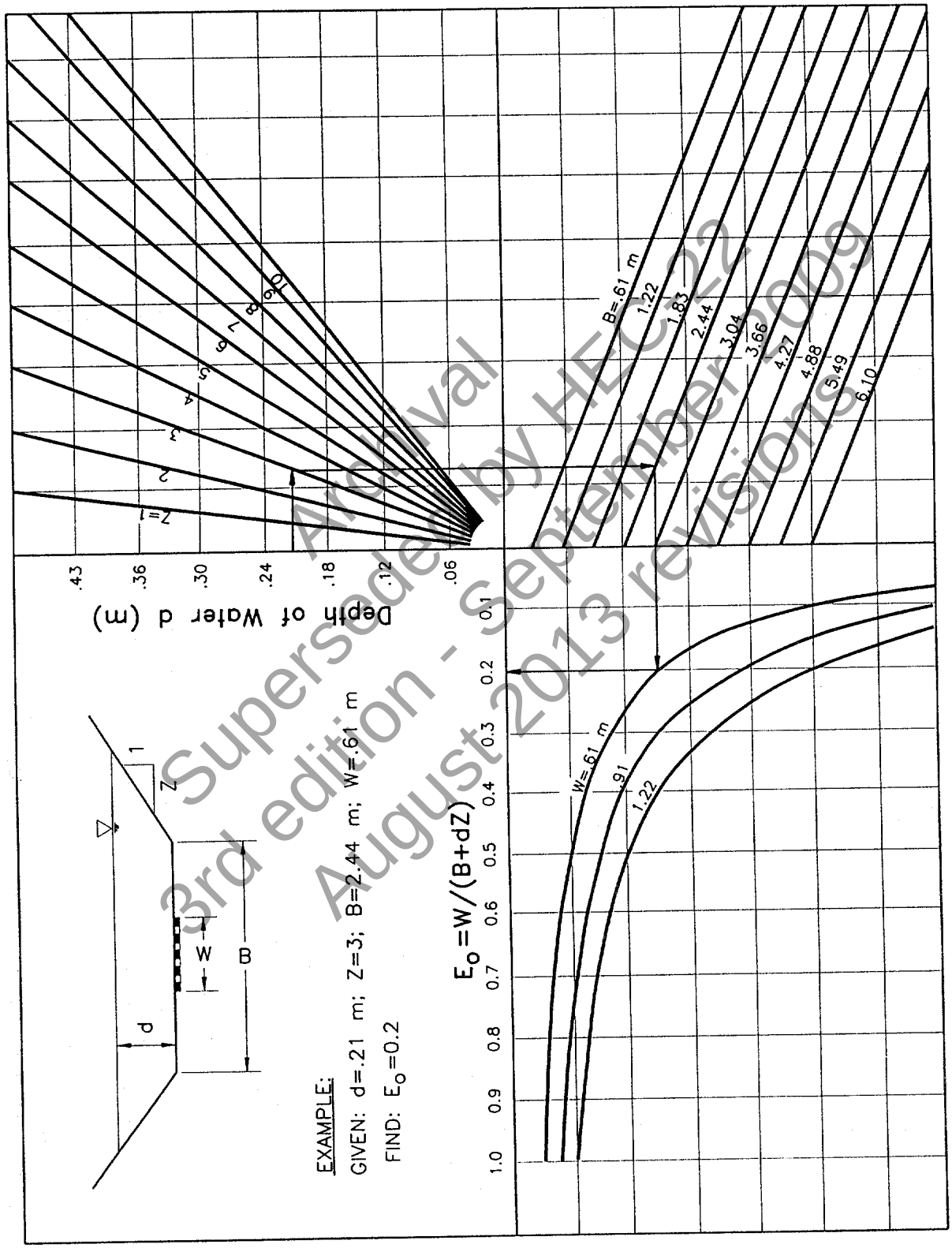


Chart 15. Ratio of Frontal Flow to Total Flow in a Trapezoidal Channel.

# CHART 16

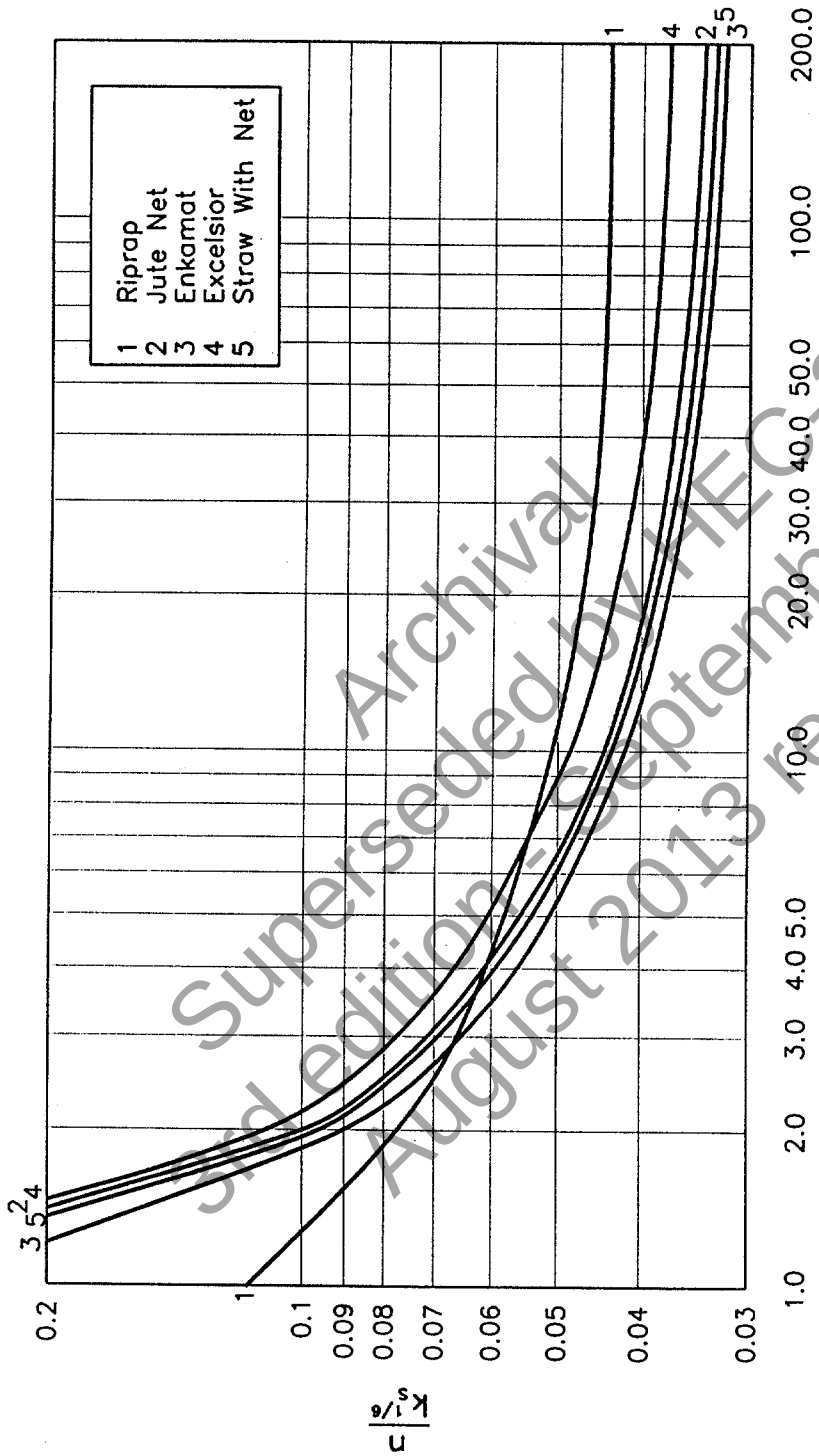


Chart 16. Manning's n Versus Relative Roughness For Selected Lining Types

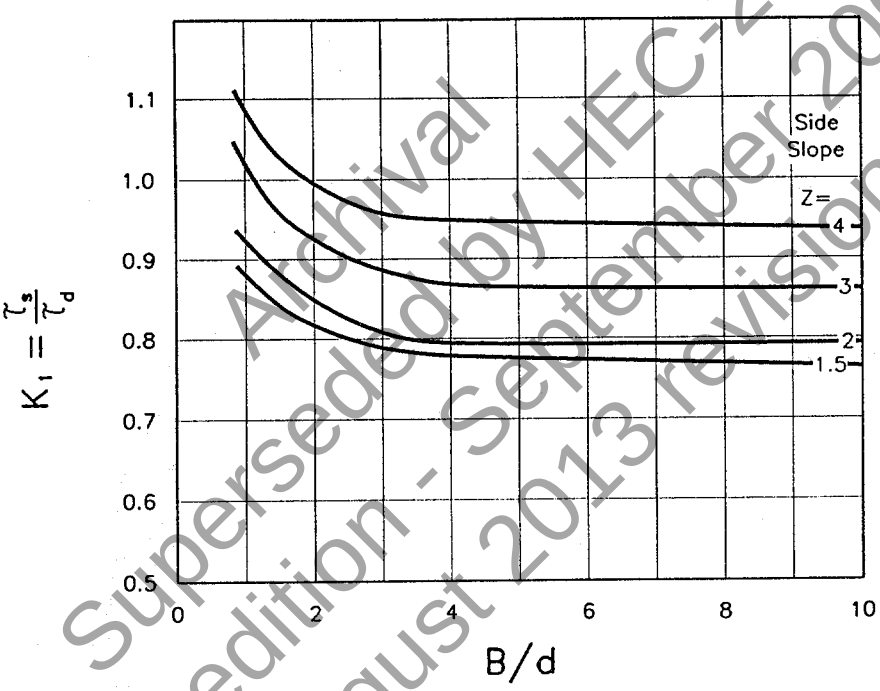


Chart 17. Channel Side Shear Stress To Bottom Shear Stress Ratio, $K_1$.

# CHART 18

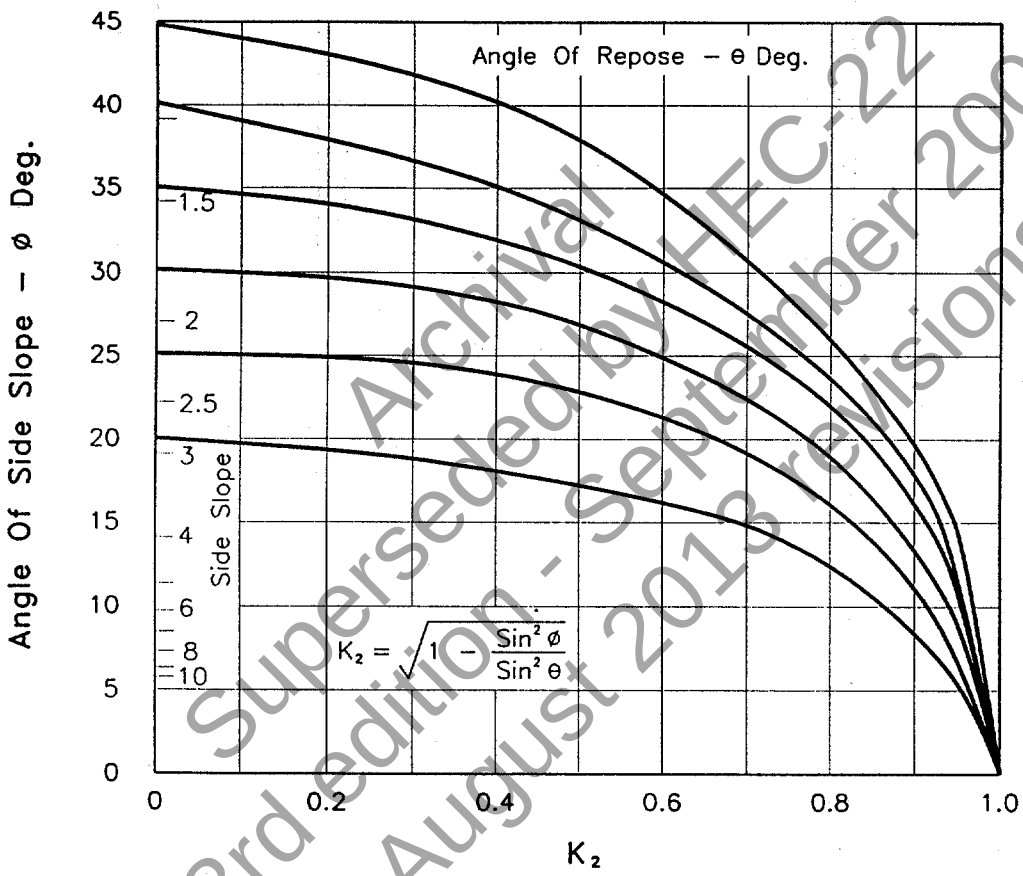


Chart 18. Tractive Force Ratio, $K_2$.

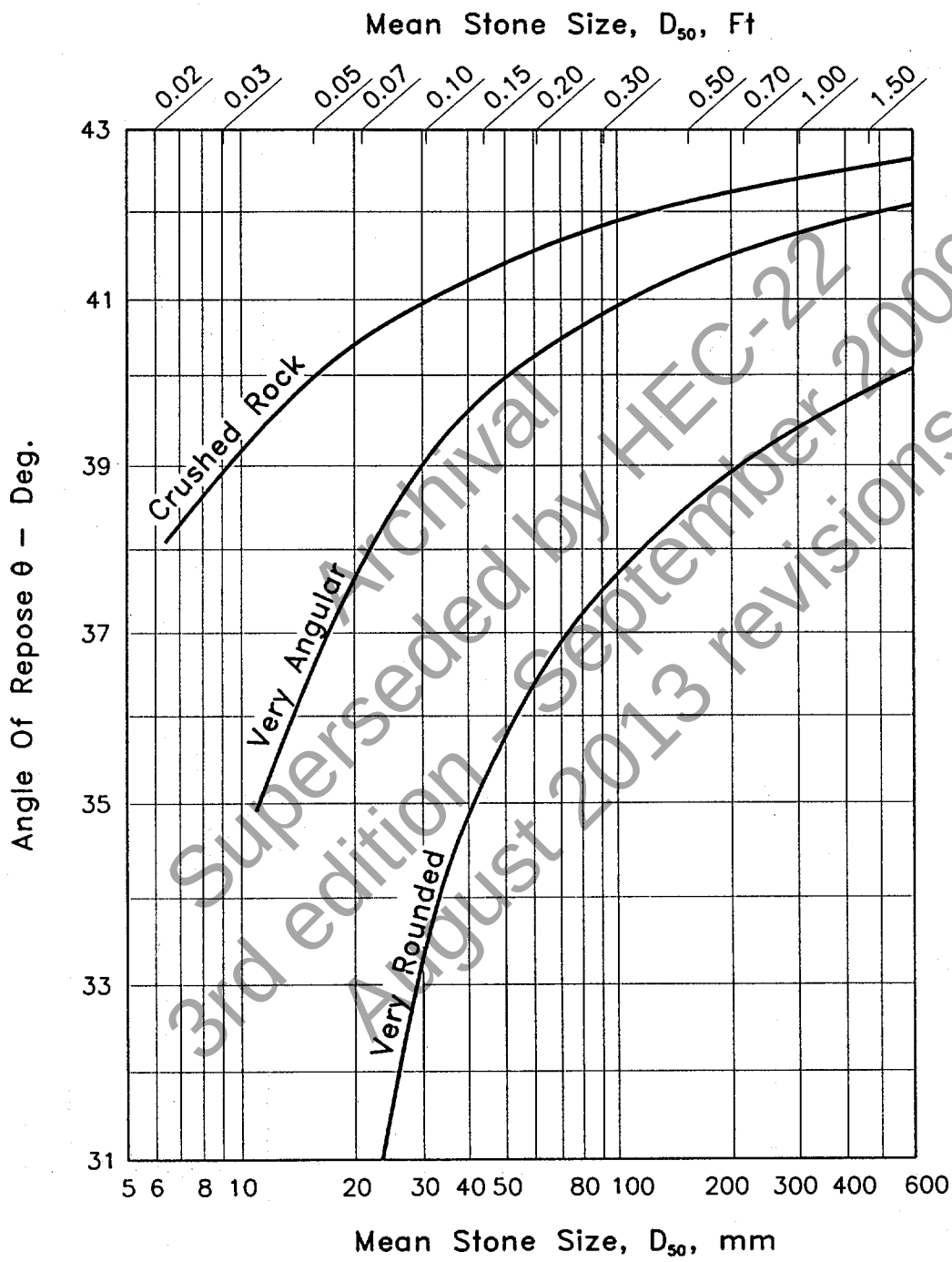




Chart 19. Angle Of Repose Of Riprap In Terms Of Mean Size And Shape Of Stone.

# CHART 20

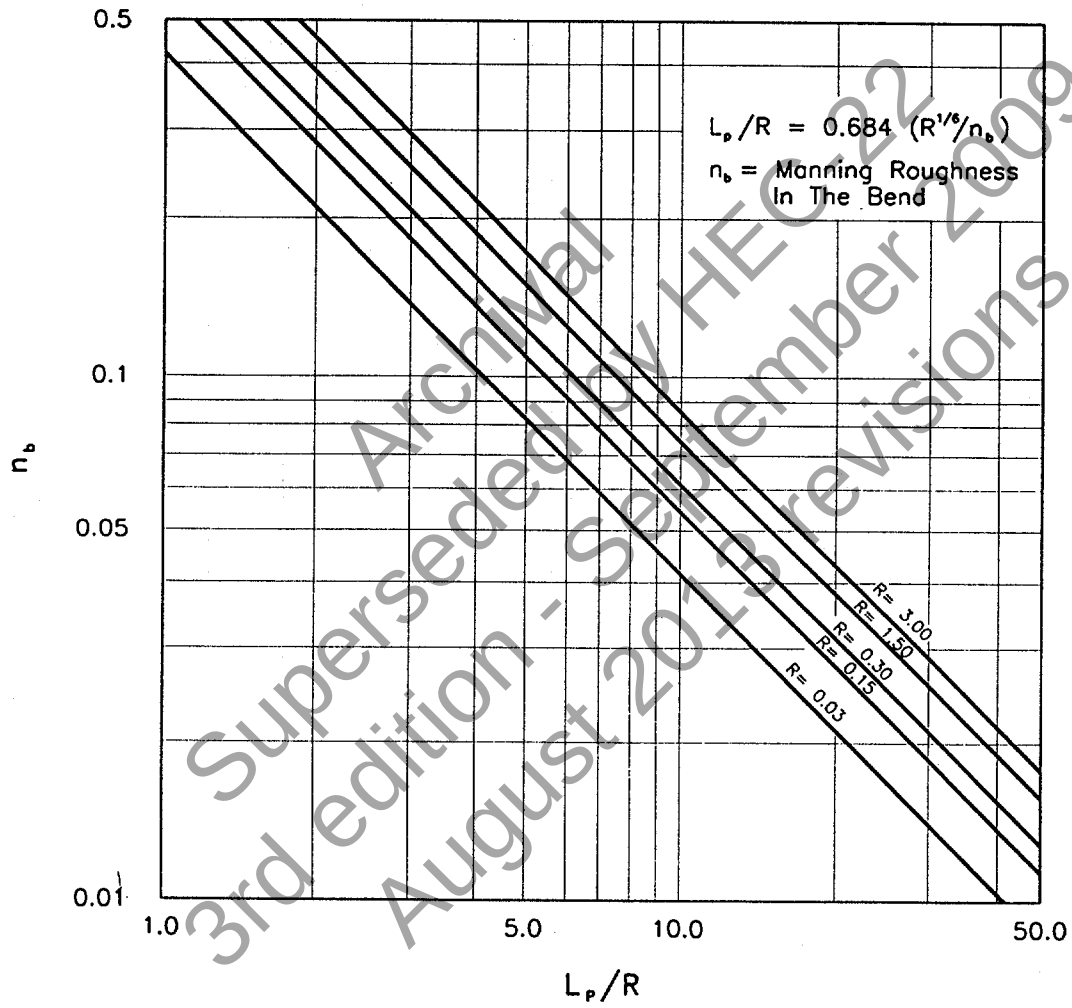




Chart 20. Protection Length, Lp, Downstream Of Channel Bend (11)

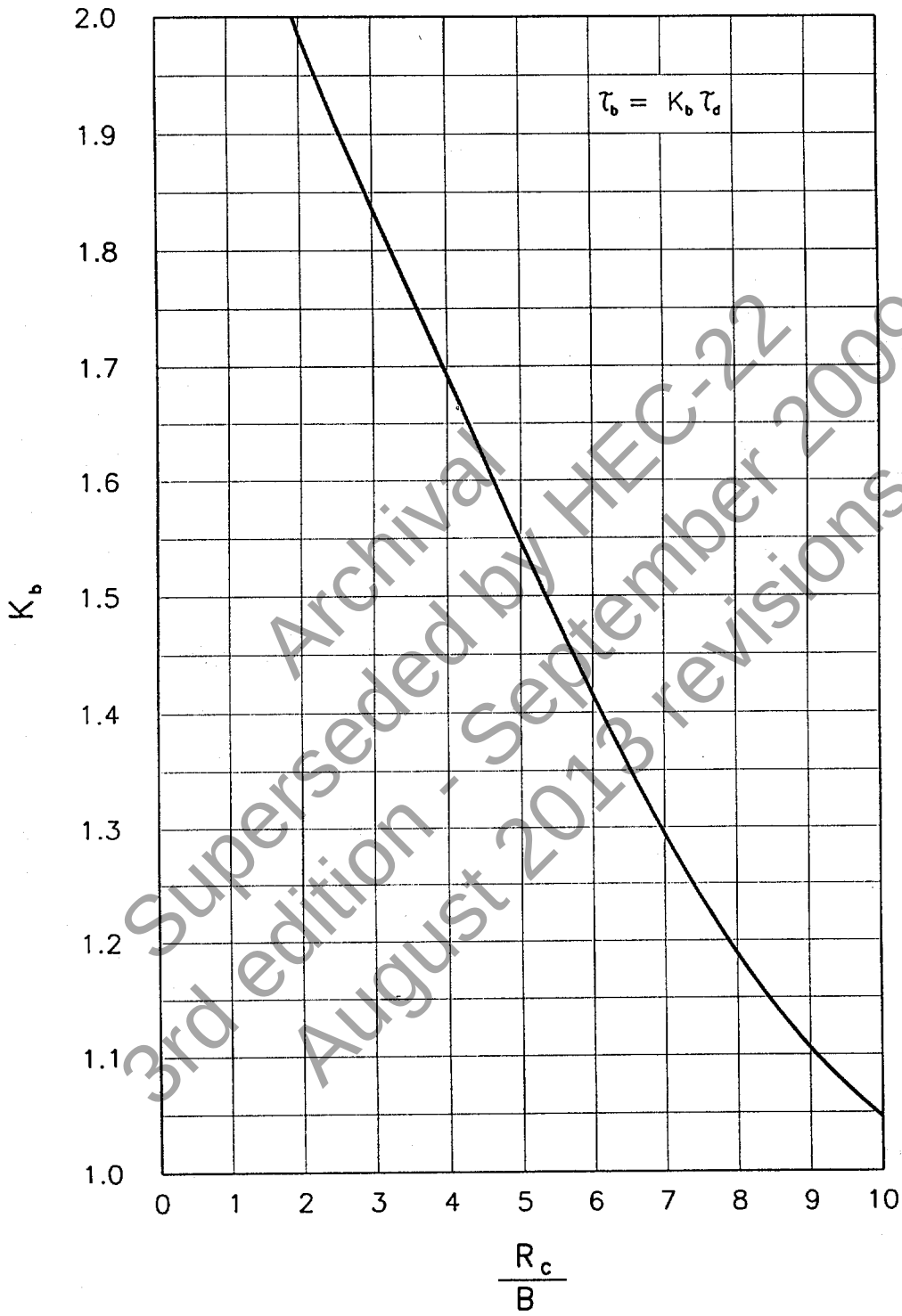




Chart 21. $K_b$ Factor For Maximum Shear Stress On Channel Bends. (12)

# CHART 22

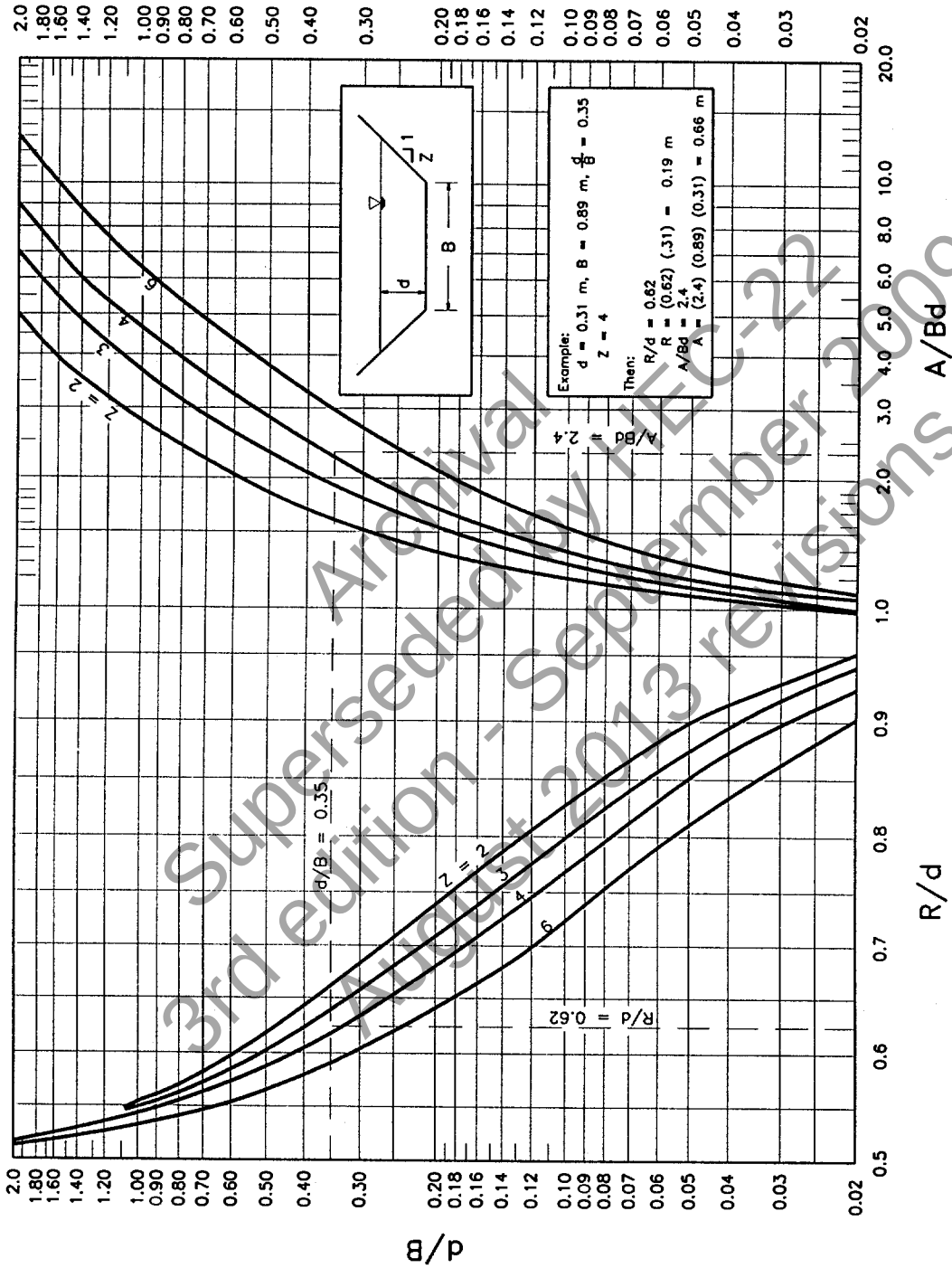


Chart 22. Geometric Design Chart For Trapezoidal Channels.

# CHART 23

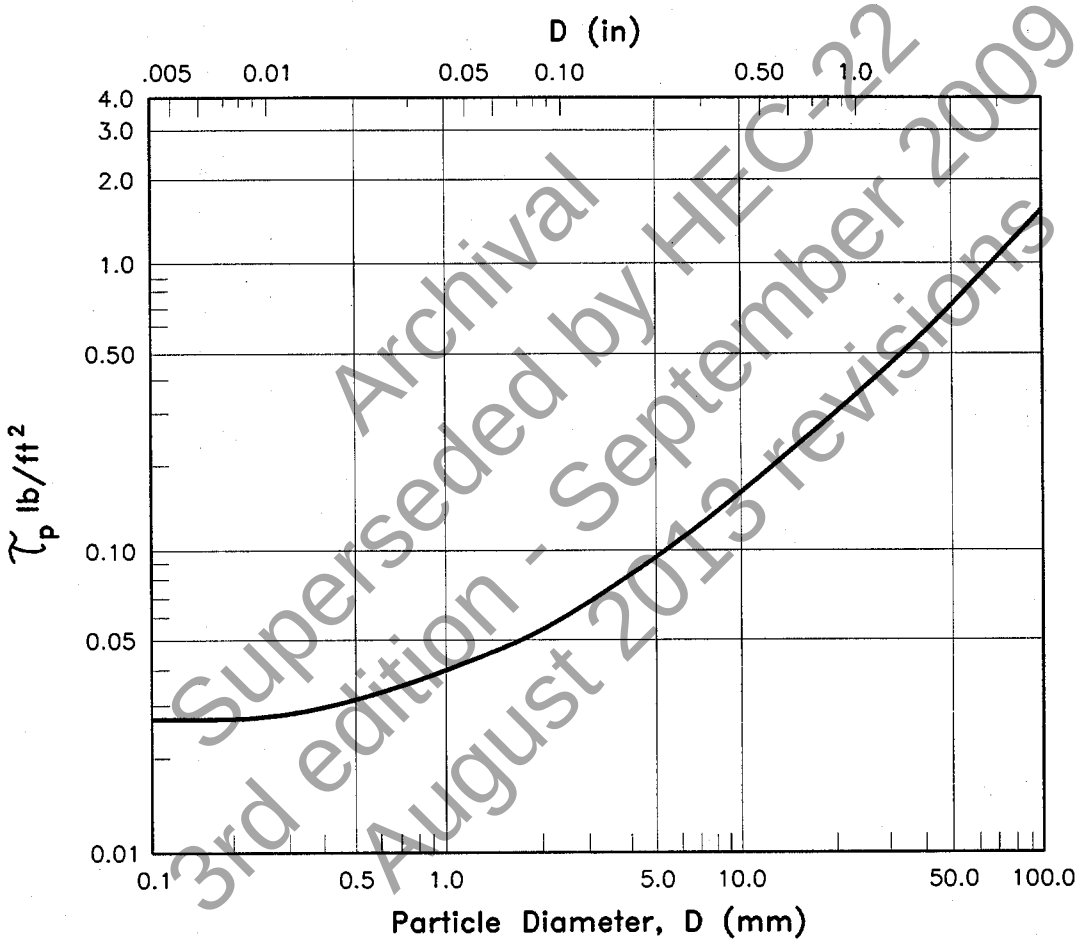




Chart 23. Permissible Shear Stress For Non-cohesive Soils. (After 15)

# CHART 24

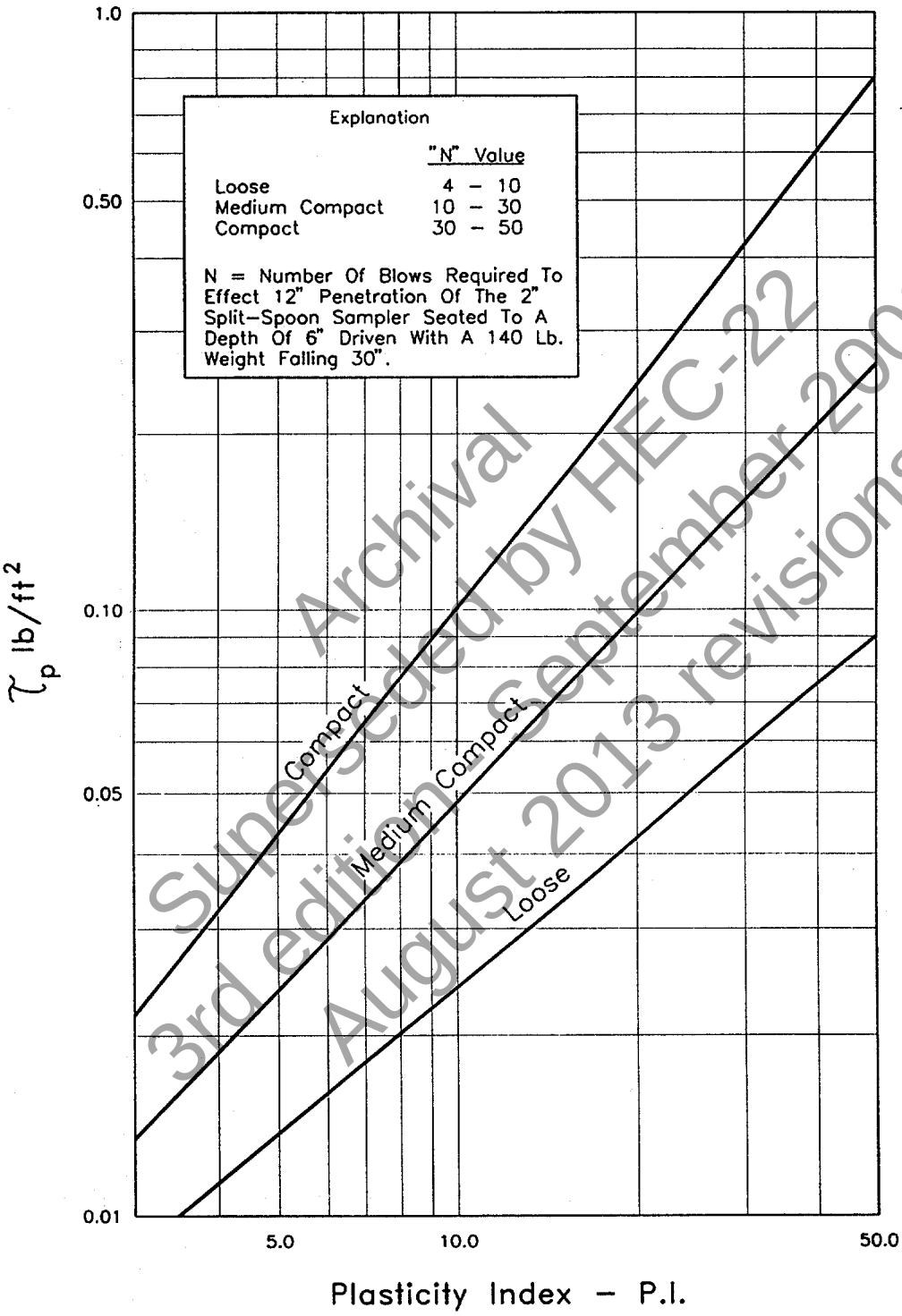




Chart 24. Permissible Shear Stress For Cohesive Soils.

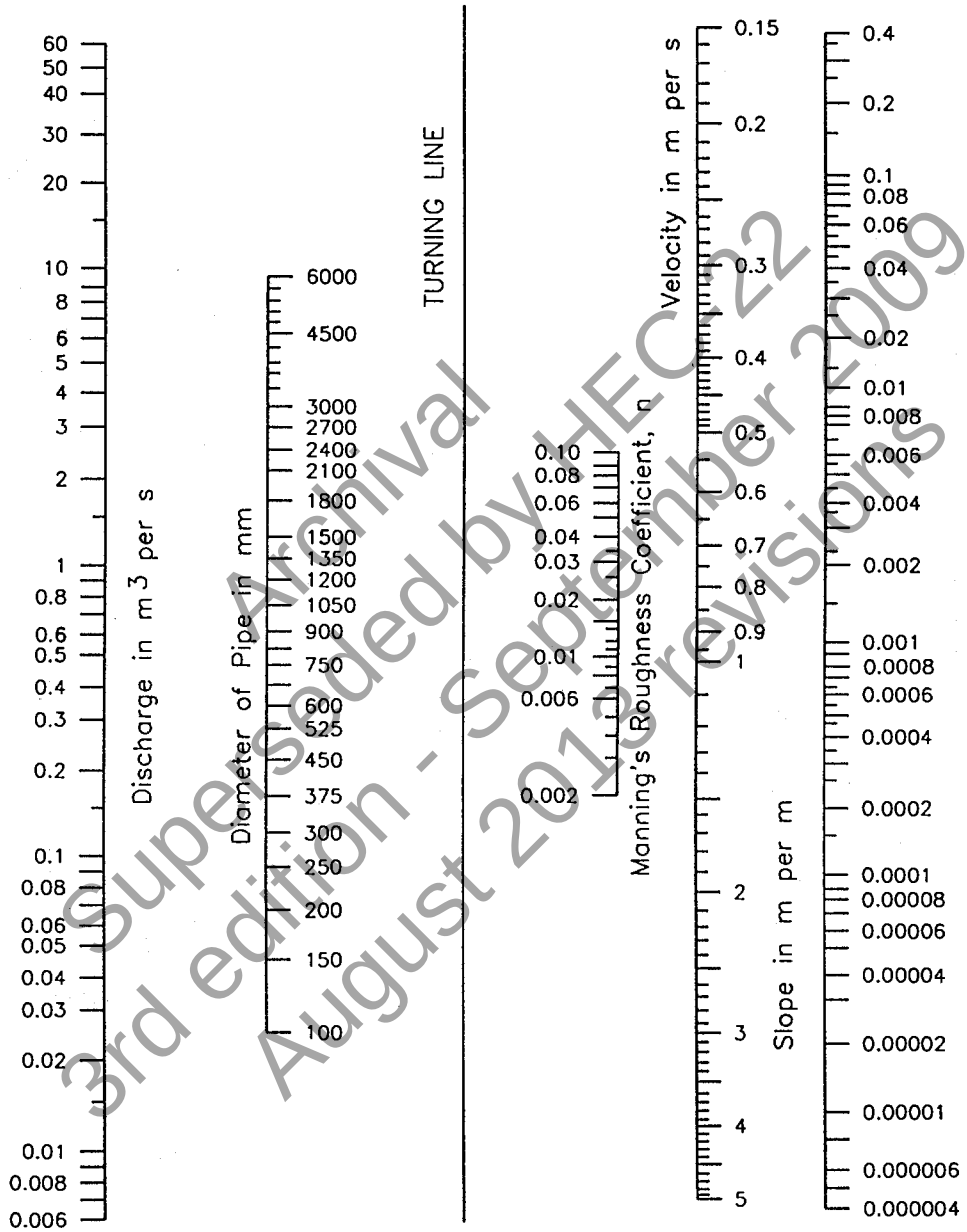




Chart 25. Solution of Manning's Equation for Flow in Strom Drains.

# CHART 26

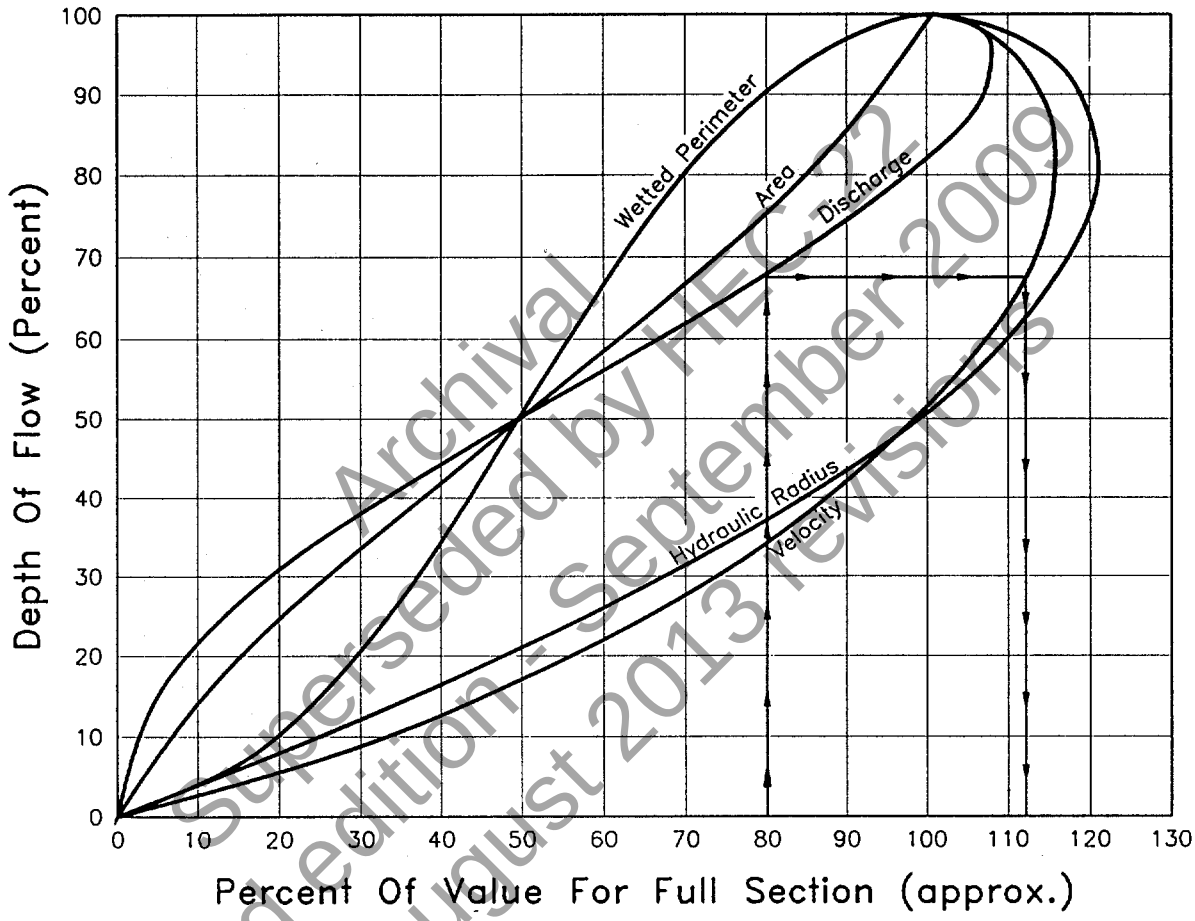




Chart 26. Hydraulic Elements Chart

# CHART 27

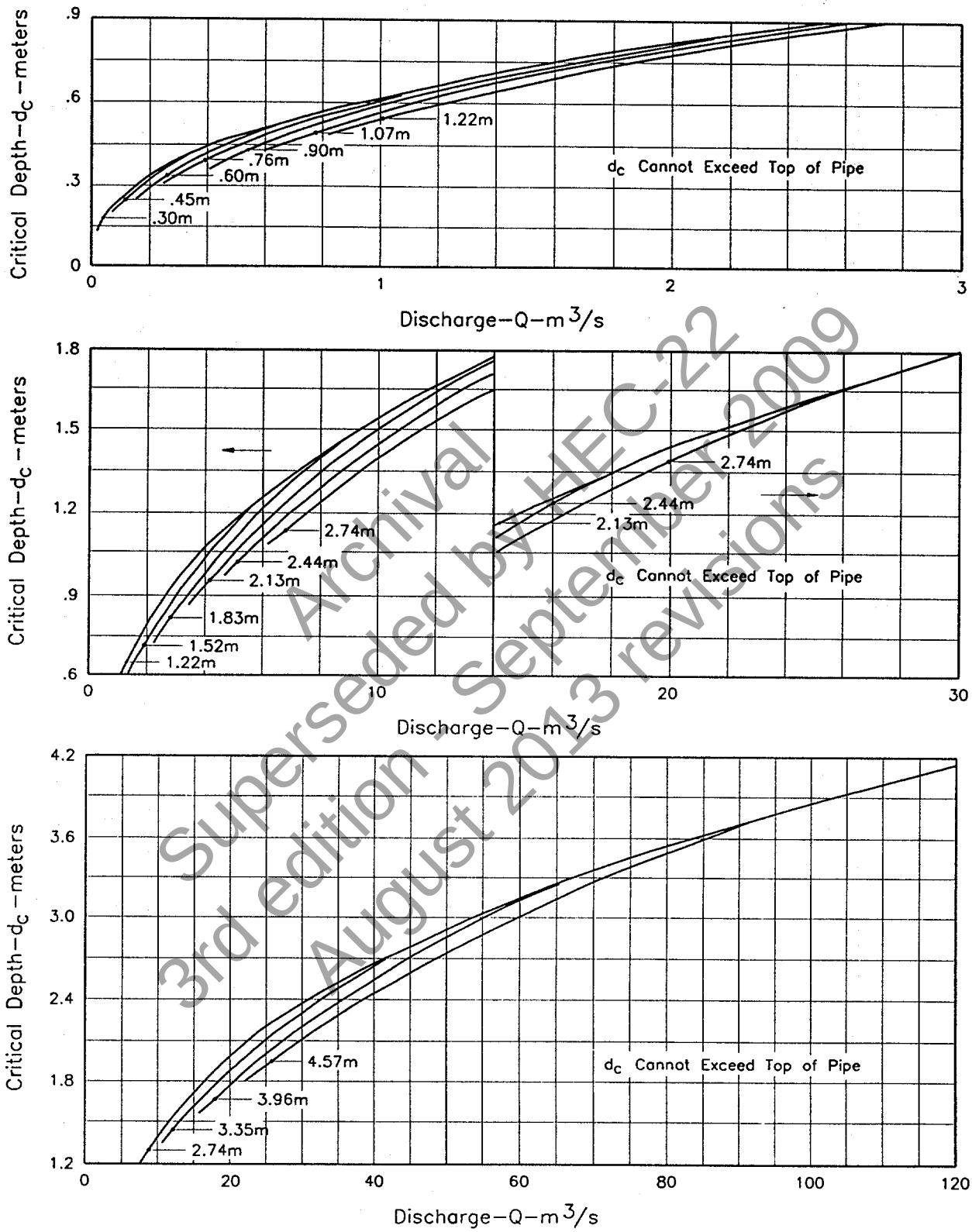




Chart 27. Critical Depth In Circular Pipe

# CHART 28

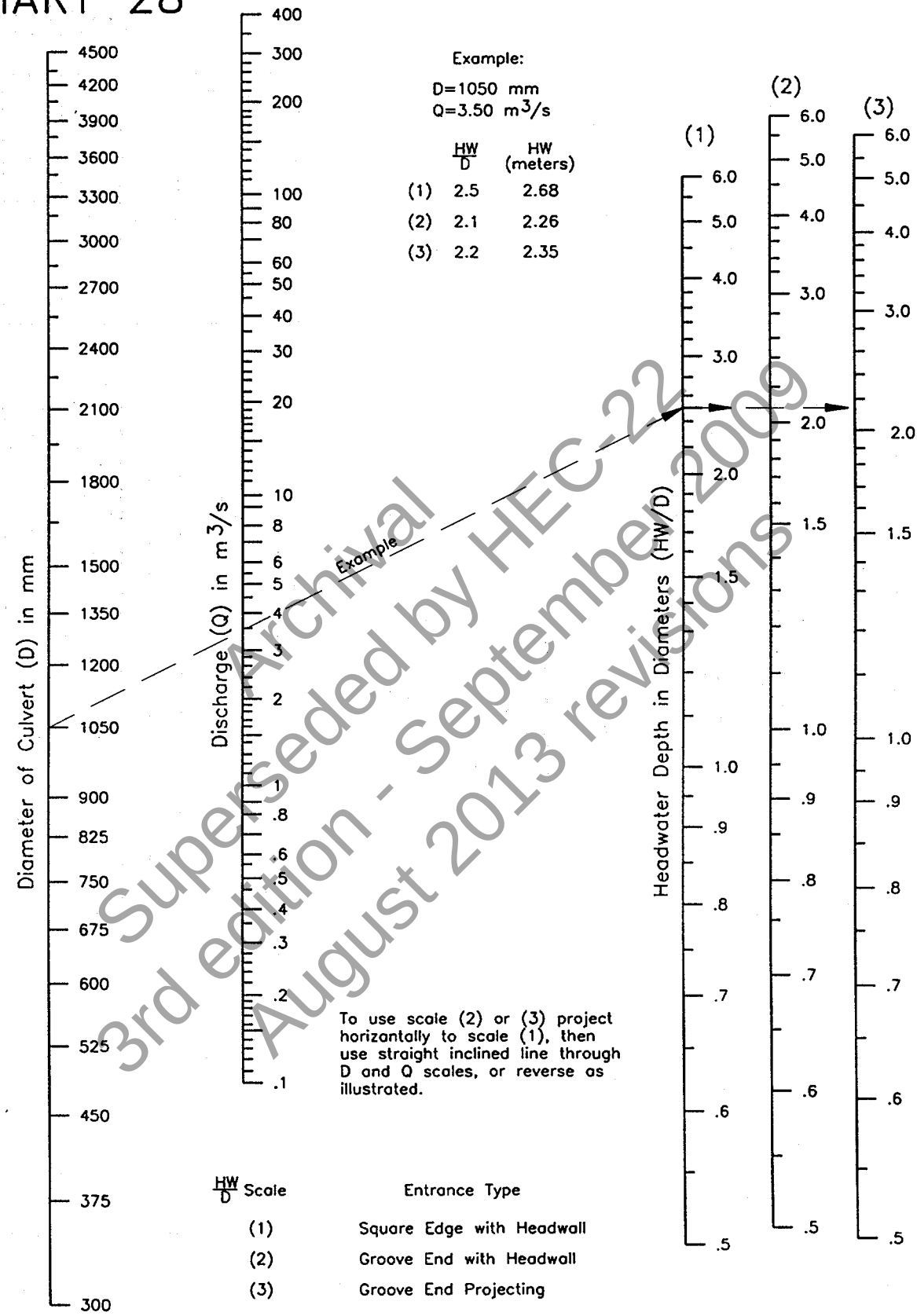




Chart 28. Headwater Depth for Concrete Pipe Culverts with Inlet Control

# CHART 29

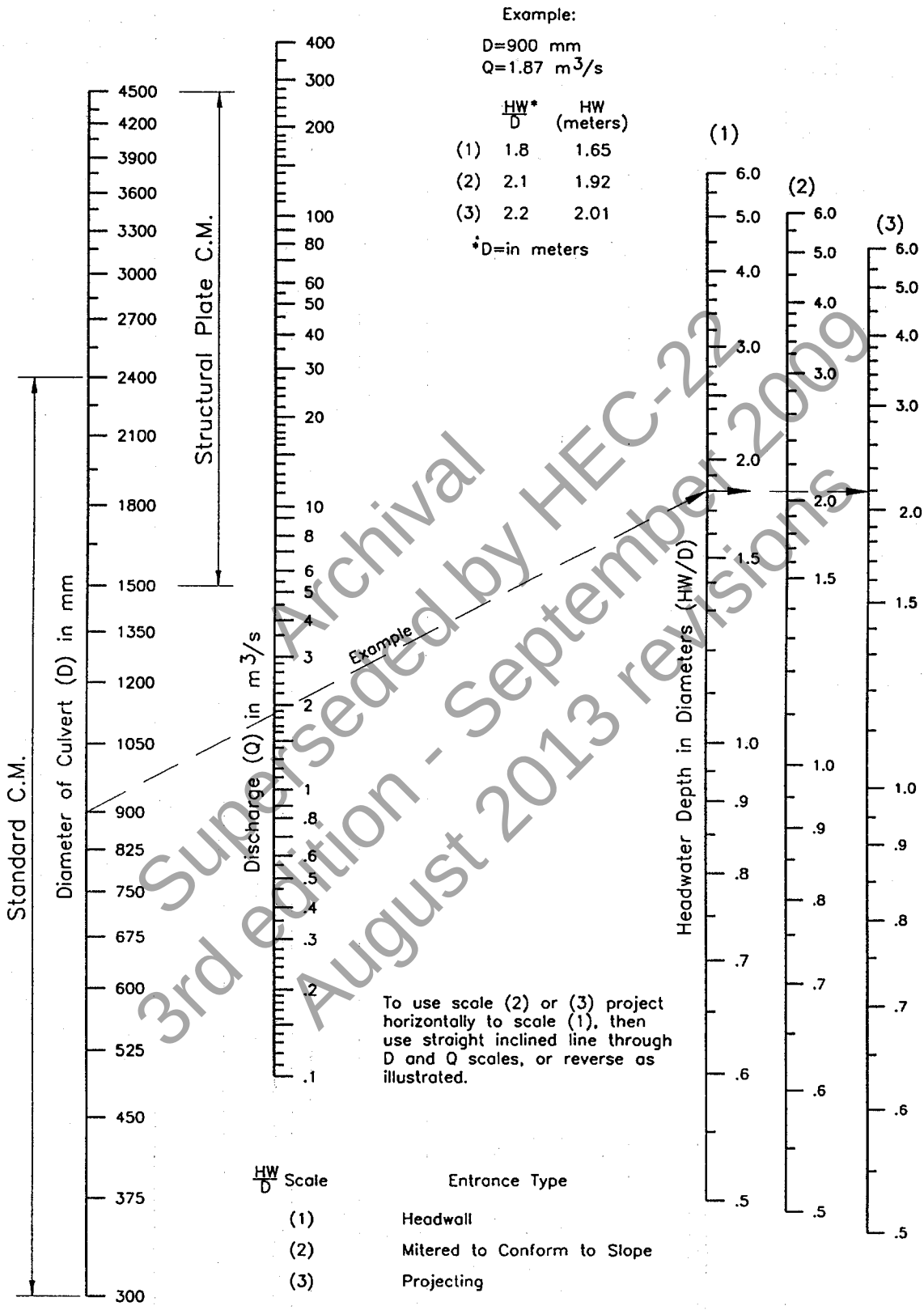




Chart 29. Headwater Depth for C.M. Pipe Culverts with Inlet Control

# APPENDIX B. COMPUTER SOLUTIONS TO SELECTED DESIGN EXAMPLES

This appendix contains computer solutions to selected examples that were presented in chapters 3 through 8. The computer programs are described in chapter 11. For each computer solution, a reference is provided to the example being solved, and which computer program is being used to solve the example. This is followed by the input and output listings for the specific run. A brief comparison of the computer output versus the design example from the text is also provided.

The following index provides a listing of the examples for which computer solutions are provided:

**Example 3-3** - Part 1 Determine 10-year peak flow using the Rational Formula for existing (unimproved) conditions.

**Program** - HYDRAIN (HYDRO subprogram)

Input file

```
JOB EXAMPLE PROBLEM 3.3 - UNIMPROVED  (EXISTING) CONDITIONS
FLW 1
RTL 0.25 * 0.22 * * * *
BAS 22.1 0 21.2 0 0 0 0
TCU 1.47
RPD 10
UIT 1.9
END
```

Output file

```
              *************** HYDRO - Version 5.0 ***************
              *  HEC19 / Design Event vs Return Period Program     *
              *            Date of Run: 07-14-95                   *
             EXAMPLE PROBLEM 3.3 - UNIMPROVED  (EXISTING) CONDITIONS

--- Input File: C:\HYDRO\EX33EX.HDO
 FLW 1
= = = FLOW ANALYSIS (Rational Method Suboption) Selected ...
 RTL 0.25 * 0.22 * * * *
 BAS 22.1 0 21.2 0 0 0 0
*** The Basin Area is     43.30  Acres
 TCU 1.47
--- The User-Supplied Time of Concentration is  1.470 hours.
 RPD 10
--- The Selected Return Period is  10 years.
 UIT 1.9
--- The User-Supplied Rainfall Intensity is  1.900 inches/hour.
*** End of Command File

                 Subarea Acreages & Runoff Coefficients

                 Meadow .......        22.10 C =  .250
                 Woods ........          .00 C =  .200*
                 Pasture ......        21.20 C =  .220
                 Crops ........          .00 C =  .300*
                 Residential ....        .00 C =  .400*
                 Urban/Highway ...       .00 C =  .700*
                 Pavement .......        .00 C =  .900*
                 - TOTAL Basin Area   43.30 Acres -
                 Weighted runoff coefficient is .235
```

```
Notice: * indicates that a default
        runoff coefficient used.

**************************************************
* Time of Concentration equals    1.47 hours     *
*     Intensity equals   1.90 inches/hour        *
**************************************************

    ************************************
    * The Peak Flow is        19. cfs  *
    ************************************
*** END OF RUN
```

Comparison : Both the example and HYDRO computed a weighted "C" value = 0.235. (Note: In the HYDRO program, the default "C" values were changed to reflect the user specified values) The peak flow in example 3-3 for the unimproved (existing) conditions was determined to be 19.4 $ft^3/s$ which compares to the peak flow of 19 $ft^3/s$ as determined by HYDRO.

**Example 3-3** - Part 2 Determine 10-year peak flow using the Rational Formula for improved (proposed) conditions.

**Program** - HYDRAIN (HYDRO subprogram)

Input file

```
JOB EXAMPLE PROBLEM 3.3 - IMPROVED  (PROPOSED) CONDITIONS
FLW 1
RTL 0.25 * 0.22 0.15 * * *
BAS 18.6 0 17.7 1.6 0 0 5.4
TCU 1.1
RPD 10
UIT 2.3
END
```

Output file

```
              *************** HYDRO - Version 5.0 ***************
              *  HEC19 / Design Event vs Return Period Program      *
              *            Date of Run: 07-14-95                    *
              EXAMPLE PROBLEM 3.3 - IMPROVED  (PROPOSED) CONDITIONS

--- Input File: C:\HYDRO\EX33PROP.HDO
 FLW 1
= = = FLOW ANALYSIS (Rational Method Suboption) Selected ...
 RTL 0.25 * 0.22 0.15 * * *
 BAS 18.6 0 17.7 1.6 0 0 5.4
*** The Basin Area is     43.30  Acres
 TCU 1.1

--- The User-Supplied Time of Concentration is   1.100 hours.
 RPD 10
--- The Selected Return Period is   10 years.
 UIT 2.3
--- The User-Supplied Rainfall Intensity is   2.300 inches/hour.
*** End of Command File

                 Subarea Acreages & Runoff Coefficients

                 Meadow .......          18.60 C =  .250
                 Woods ........            .00 C =  .200*
                 Pasture ......          17.70 C =  .220
                 Crops ........           1.60 C =  .150
                 Residential ....          .00 C =  .400*
                 Urban/Highway ...         .00 C =  .700*
                 Pavement .......         5.40 C =  .900*
                 - TOTAL Basin Area    43.30 Acres -
                 Weighted runoff coefficient is .315
```

```
Notice: * indicates that a default
        runoff coefficient used.

**********************************************
* Time of Concentration equals    1.10 hours        *
*     Intensity equals   2.30 inches/hour           *
**********************************************

    ************************************
    * The Peak Flow is          32. cfs        *
    ************************************
*** END OF RUN
```

Comparison : Both the example and HYDRO computed a weighted "C" value = 0.315. (Note: In the HYDRO program, the default "C" values were changed to reflect the user specified values) The peak flow in example 3-3 for the improved (proposed) conditions was determined to be 31.2 $ft^3/s$ which compares to the peak flow of 32 $ft^3/s$ as determined by HYDRO.

**Example 3-5** - Determine 24-hr, type II, 10-year rainfall peak flow using the SCS peak flow method.

**Program** TR-55

Input

Select 4: Graphical Discharge Method

TR-55 GRAPHICAL DISCHARGE METHOD VERSION 1.11

> > > > > Basic Procedure Data < < < < <

Drainage Area .... Acres or 2.36 Sq. Mi.
Runoff Curve Number 78
Time of Concentration 0.8 Hours

> > > > > Adjustment Parameter Data < < < < <

Pond and Swamp Area .... Acres, 0.0 Sq. Mi.,
or .... % of drainage area

> > > > > Rainfall-Frequency Data < < < < <

| Rainfall Type II (I,IA,II,III) | | Frequency (yrs) | 24-Hr Rain (in) |
|---|---|---|---|
| | storm # 1 | 10 | 5.9 |

Output

| Peak Flow (cfs) | Runoff (in) |
|---|---|
| 3366 | 3.5 |

Comparison: The peak flow determined in example 3-5 was 3390 $ft^3/s$ (96 $m^3/s$) which is approximately equal to the TR-55 computed value of 3366 $ft^3/s$ (95 $m^3/s$).

**Example 3-9** - Determine the ordinates of the USGS Nationwide Urban Hydrograph for existing (unimproved) conditions.

**Program** - HYDRAIN (HYDRO subprogram)

Input file

```
JOB EXAMPLE PROBLEM 3.9 - UNIMPROVED  (EXISTING) CONDITIONS
FLW 1
RTL 0.25 * 0.22 * * * *
BAS 22.1 0 21.2 0 0 0 0
TCU 1.47
RPD 10
UIT 1.9
DHY
TLG 0 19 0.68
END
```

Output file

```
              *************** HYDRO - Version 5.0 ***************
              *  HEC19 / Design Event vs Return Period Program      *
              *            Date of Run: 07-14-95                    *
             EXAMPLE PROBLEM 3.9 - UNIMPROVED  (EXISTING) CONDITIONS

--- Input File: C:\HYDRO\EX39EX.HDO
 FLW 1
= = = FLOW ANALYSIS (Rational Method Suboption) Selected ...
 RTL 0.25 * 0.22 * * * *
 BAS 22.1 0 21.2 0 0 0 0
*** The Basin Area is     43.30  Acres
 TCU 1.47
--- The User-Supplied Time of Concentration is   1.470 hours.
 RPD 10
--- The Selected Return Period is   10 years.
 UIT 1.9
--- The User-Supplied Rainfall Intensity is  1.900 inches/hour.
 DHY
--- Compute Hydrograph using Dimensionless curve ...
 TLG 0 19 0.68
*** Notice:  Calculated Time Lag Selected ...
--- Basin Development Factor:   .00
    Slope: 19.000 ft/mile.
    Length:    .680 miles.
--- The Time Lag is    .90 hours.
*** End of Command File
```

Subarea Acreages & Runoff Coefficients

| | | |
|---|---|---|
| Meadow ..... | 22.10 C = | .250 |
| Woods ..... | .00 C = | .200* |
| Pasture ..... | 21.20 C = | .220 |
| Crops ..... | .00 C = | .300* |
| Residential ..... | .00 C = | .400* |
| Urban/Highway ... | .00 C = | .700* |
| Pavement ..... | .00 C = | .900* |

- TOTAL Basin Area 43.30 Acres -
Weighted runoff coefficient is .235

Notice: * indicates that a default
runoff coefficient used.

```
*************************************************
* Time of Concentration equals    1.47 hours    *
*     Intensity equals   1.90 inches/hour       *
*************************************************
```

```
*************************************
* The Peak Flow is        19. cfs   *
*************************************
```

Graph of Hydrograph
Flow (cfs) versus Time (hours)

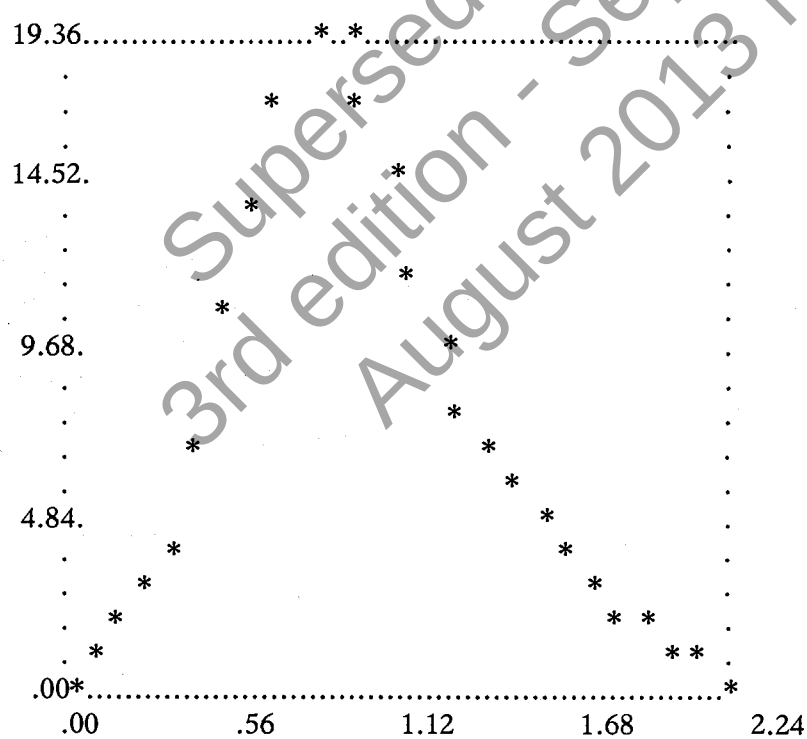

| Point | Time (hrs) | Flow (cfs) |
|---|---|---|
| 1 | .00000 | .00000 |
| 2 | .08968 | .77436 |
| 3 | .17937 | 1.54873 |
| 4 | .26905 | 2.71027 |
| 5 | .35874 | 4.06541 |
| 6 | .44842 | 7.16287 |
| 7 | .53810 | 10.84110 |
| 8 | .62779 | 14.71292 |
| 9 | .71747 | 17.81037 |
| 10 | .80715 | 19.35910 |
| 11 | .89684 | 18.97192 |
| 12 | .98652 | 17.42319 |
| 13 | 1.07621 | 15.10010 |
| 14 | 1.16589 | 12.58342 |
| 15 | 1.25557 | 10.45391 |
| 16 | 1.34526 | 8.51800 |
| 17 | 1.43494 | 6.96928 |
| 18 | 1.52463 | 5.80773 |
| 19 | 1.61431 | 4.83978 |
| 20 | 1.70399 | 4.06541 |
| 21 | 1.79368 | 3.29105 |
| 22 | 1.88336 | 2.51668 |
| 23 | 1.97304 | 1.93591 |
| 24 | 2.06273 | 1.16155 |
| 25 | 2.15241 | .58077 |
| 26 | 2.24210 | .00000 |

=== File Created on Intermediate Directory: EX39EX.QT
*** END OF RUN

<u>Comparison</u> : As in example 3-3, HYDRO again computed a weighted "C" value = 0.235. (Note: In the HYDRO program, the default "C" values were changed to reflect the user specified values.) The peak flow for the hydrograph in example 3-9 for the existing (unimproved) conditions was determined to be 0.55 $m^3/s$ (19.4 $ft^3/s$) which compares to the peak flow of 19.35 $ft^3/s$ as determined by HYDRO. Additionally, the complete hydrograph is the same as the hydrograph determined by hand calculation in example 3-9. (The output from HYDRAIN is currently only in the English system of units.) The hydrograph for the improved (proposed) conditions was run on HYDRAIN and displayed the results shown in example 3-9. The output is not included here for brevity.

**Example 4-1 - Part 1** : Determine spread in gutter section.

**Program** - HY12

Input

Select: 4. HEC-12 Pavement Drainage
Select: 1. Gutter Flow, Grates, & Curb Openings
From the PROGRAM MENU, select option 1: Input Data File

DISCHARGE & ROADWAY DATA

| | |
|---|---|
| 1. Longitudinal Slope (ft/ft) | = 0.010 |
| 2. Pavement Cross Slope (ft/ft) | = 0.020 |
| 3. Gutter Cross Slope (ft/ft) | = 0.020 |
| 4. Manning's Coefficient | = 0.016 |
| 5. Gutter Width (ft) | = 10.000 |
| 6. Gutter Depression (in) | = 0.000 |
| 7. Discharge (cfs) | = 1.800 |
| 8. Width of Spread (ft) | = Unknown (user input -1) |

From the ANALYSIS OPTIONS, select option 1: Gutter Flow Parameters.

Output

```
*****************************************
***** ROADWAY DRAINAGE DESIGN *****
*****************************************
```

DESIGNER: DATE:
PROJECT: PROJECT NO.:
INLET NO. STATION:
DRAINAGE AREA: Acres DESIGN FREQUENCY:

ROADWAY & DISCHARGE DATA

| Cross-Slope | S (ft/ft) | Sx (ft/ft) | n | Q (cfs) | T (ft) |
|---|---|---|---|---|---|
| Uniform | 0.010 | 0.020 | 0.016 | 1.79 | 8.97 |

GUTTER FLOW

| W (ft) | Sw (ft/ft) | a (in) | Eo | d (ft) | V (fps) |
|---|---|---|---|---|---|
| 10.00 | 0.020 | 0.00 | 1.000 | 0.18 | 1.79 |

Comparison : The calculated spread from HY12 is 8.97 ft (2.73 m), which is equal to the calculated spread of 8.9 ft (2.7 m) in example 4-1, part 1.

**Example 4-1 - Part 2** : Determine flow in gutter section.

**Program** - HY12

Input

Select: 4. HEC-12 Pavement Drainage
Select: 1. Gutter Flow, Grates, & Curb Openings
From the PROGRAM MENU, select option 1: Input Data File

DISCHARGE & ROADWAY DATA

| | |
|---|---|
| 1. Longitudinal Slope (ft/ft) | = 0.010 |
| 2. Pavement Cross Slope (ft/ft) | = 0.020 |
| 3. Gutter Cross Slope (ft/ft) | = 0.020 |
| 4. Manning's Coefficient | = 0.016 |
| 5. Gutter Width (ft) | = 10.000 |
| 6. Gutter Depression (in) | = 0.000 |
| 7. Discharge (cfs) | = Unknown (user input -1) |
| 8. Width of Spread (ft) | = 8.200 |

From the ANALYSIS OPTIONS, select option 1: Gutter Flow Parameters

Output

```
****************************************
***** ROADWAY DRAINAGE DESIGN *****
****************************************
```

DESIGNER: DATE:
PROJECT: PROJECT NO.:
INLET NO. STATION:
DRAINAGE AREA: Acres DESIGN FREQUENCY:

ROADWAY & DISCHARGE DATA

| Cross-Slope | S (ft/ft) | Sx (ft/ft) | n | Q (cfs) | T (ft) |
|---|---|---|---|---|---|
| Uniform | 0.010 | 0.020 | 0.016 | 1.41 | 8.20 |

GUTTER FLOW

| W (ft) | Sw (ft/ft) | a (in) | Eo | d (ft) | V (fps) |
|---|---|---|---|---|---|
| 10.00 | 0.020 | 0.00 | 1.000 | 0.16 | 1.41 |

Comparison : The calculated flow from HY12 is 1.41 $ft^3/s$ (0.040 $m^3/s$), which is equal to the calculated flow of 1.4 $ft^3/s$ (0.040 $m^3/s$) in example 4-1, part 2.

**Example 4-2 - Part 1** : Determine flow in depressed gutter section.

**Program** - HY12

Input

Select: 4. HEC-12 Pavement Drainage
Select: 1. Gutter Flow, Grates, & Curb Openings
From the PROGRAM MENU, select option 1: Input Data File

DISCHARGE & ROADWAY DATA

| | |
|---|---|
| 1. Longitudinal Slope (ft/ft) | = 0.010 |
| 2. Pavement Cross Slope (ft/ft) | = 0.020 |
| 3. Gutter Cross Slope (ft/ft) | = 0.103 |
| 4. Manning's Coefficient | = 0.016 |
| 5. Gutter Width (ft) | = 2.000 |
| 6. Gutter Depression (in) | = 1.000 |
| 7. Discharge (cfs) | = Unknown (user input -1) |
| 8. Width of Spread (ft) | = 8.200 |

From the ANALYSIS OPTIONS, select option 1: Gutter Flow Parameters

Output

```
*****************************************
***** ROADWAY DRAINAGE DESIGN *****
*****************************************
```

| | |
|---|---|
| DESIGNER: | DATE: |
| PROJECT: | PROJECT NO.: |
| INLET NO. | STATION: |
| DRAINAGE AREA: Acres | DESIGN FREQUENCY: |

ROADWAY & DISCHARGE DATA

| Cross-Slope | S (ft/ft) | Sx (ft/ft) | n | Q (cfs) | T (ft) |
|---|---|---|---|---|---|
| Composite | 0.010 | 0.020 | 0.016 | 2.31 | 8.20 |

GUTTER FLOW

| W (ft) | Sw (ft/ft) | a (in) | Eo | d (ft) | V (fps) |
|---|---|---|---|---|---|
| 2.00 | 0.103 | 2.00 | 0.710 | 0.33 | 2.75 |

Comparison : The calculated flow from HY12 is 2.31 $ft^3/s$ (0.065 $m^3/s$), which is equal to the calculated flow of 2.3 $ft^3/s$ (0.06 $m^3/s$) in example 4-2, part 1.

73. R.R. Horner, 1988. Biofiltration Systems for Storm Runoff Water Quality Control. Prepared for Washington State Department of Ecology.

74. R. Lowrance, et al., 1984. Riparian Forests as Nutrient Fillers in Agricultural Watersheds. BioScience 34(6).

75. E.W. Stricker, et al., 1992. The Use of Wetlands for Controlling Stormwater Pollution. Woodward-Clyde Consultants for the Terrene Institute, Washington, DC (April).

76. Virginia Erosion and Sediment Control Handbook, 1980. Division of Soil and Water Conservation, Virginia Department of Conservation and Historic Resources, Richmond, Virginia.

77. G.K. Young and J.S. Krolak, 1993. HYDRAIN-Integrated Drainage Design Computer System, Version 5.0. Federal Highway Administration, McLean, Virginia.

78. Soil Conservation Service, 1982. TR-20, Project Formulation-Hydrology. Technical Release 20, Lanham, Maryland.

79. U.S. Army Corps of Engineers, 1990. HEC-1, Flood Hydrograph Package, User's Manual. Hydrologic Engineering Center, Davis, California.

80. W.C. Huber, et al., 1988. Storm Water Management Model User's Manual, Version IV. U.S. Environmental Protection Agency, Athens, Georgia.

81. L.A. Roesner, et al., 1989. Stormwater Management Model User's Manual, Version IV. EXTRAN Addendum, Athens, Georgia.

82. G. Aron, et al., 1992. Penn State Runoff Quality Model User Manual. Department of Civil Engineering, The Pennsylvania State University.

83. W.M. Alley and P.E. Smith, 1990. Distributed Routing Rainfall-Runoff Model-Version II, User's Manual. Open-File Report 82-344, United States Geological Survey, NSTL Station, Mississippi.

84. E.D. Driscoll, P.E. Shelley, and E.W. Strecker, 1990. Pollutant Loadings and Impacts from Highway Stormwater Runoff, Volumes I-IV. FHWA-RD-88-006/009, Office of Engineering and Highway Operations R&D, Federal Highway Administration, McLean, VA

85. Pennsylvania Department of Transportation, 1994. Standards for Roadway Construction. Publication No. 72, Harrisburg, Pennsylvania (March).






☆ U. S. GOVERNMENT PRINTING OFFICE: 1997-430-272/80117

**Example 4-4 - Part 1** : Determine spread in V-shaped gutter section.

**Program** - HY12

Input

Select: 4. HEC-12 Pavement Drainage
Select: 1. Gutter Flow, Grates, & Curb Openings
From the PROGRAM MENU, select option 1: Input Data File

DISCHARGE & ROADWAY DATA

| | |
|---|---|
| 1. Longitudinal Slope (ft/ft) | = 0.010 |
| 2. Pavement Cross Slope (ft/ft) | = 0.020 |
| 3. Gutter Cross Slope (ft/ft) | = 0.020 |
| 4. Manning's Coefficient | = 0.016 |
| 5. Gutter Width (ft) | = 19.600 |
| 6. Gutter Depression (in) | = 0.000 |
| 7. Discharge (cfs) | = 1.800 |
| 8. Width of Spread (ft) | = Unknown (user input -1) |

From the ANALYSIS OPTIONS, select option 1: Gutter Flow Parameters

Output

```
****************************************
***** ROADWAY DRAINAGE DESIGN *****
****************************************
```

| | |
|---|---|
| DESIGNER: | DATE: |
| PROJECT: | PROJECT NO.: |
| INLET NO. | STATION: |
| DRAINAGE AREA: Acres | DESIGN FREQUENCY: |

ROADWAY & DISCHARGE DATA

| Cross-Slope | S (ft/ft) | Sx (ft/ft) | n | Q (cfs) | T (ft) |
|---|---|---|---|---|---|
| Uniform | 0.010 | 0.020 | 0.016 | 1.79 | 8.97 |

GUTTER FLOW

| W (ft) | Sw (ft/ft) | a (in) | Eo | d (ft) | V (fps) |
|---|---|---|---|---|---|
| 19.60 | 0.020 | 0.00 | 1.000 | 0.18 | 0.46 |

Comparison : The calculated spread from HY12 is 8.97 ft (2.73 m), which is equal to the calculated spread of 9.0 ft (2.7 m) in example 4-4, part 1.

**Example 4-4 - Part 2** : Determine flow in V-shaped gutter section.

**Program** - HY12

Input

Select: 4. HEC-12 Pavement Drainage
Select: 1. Gutter Flow, Grates, & Curb Openings
From the PROGRAM MENU, select option 1: Input Data File

DISCHARGE & ROADWAY DATA

| | |
|---|---|
| 1. Longitudinal Slope (ft/ft) | = 0.010 |
| 2. Pavement Cross Slope (ft/ft) | = 0.020 |
| 3. Gutter Cross Slope (ft/ft) | = 0.020 |
| 4. Manning's Coefficient | = 0.016 |
| 5. Gutter Width (ft) | = 19.600 |
| 6. Gutter Depression (in) | = 0.000 |
| 7. Discharge (cfs) | = Unknown (user input -1) |
| 8. Width of Spread (ft) | = 9.800 |

From the ANALYSIS OPTIONS, select option 1: Gutter Flow Parameters

Output

```
*************************************
***** ROADWAY DRAINAGE DESIGN *****
*************************************
```

DESIGNER: DATE:
PROJECT: PROJECT NO.:
INLET NO. STATION:
DRAINAGE AREA: Acres DESIGN FREQUENCY:

ROADWAY & DISCHARGE DATA

| Cross-Slope | S (ft/ft) | Sx (ft/ft) | n | Q (cfs) | T (ft) |
|---|---|---|---|---|---|
| Uniform | 0.010 | 0.020 | 0.016 | 2.26 | 9.80 |

GUTTER FLOW

| W (ft) | Sw (ft/ft) | a (in) | Eo | d (ft) | V (fps) |
|---|---|---|---|---|---|
| 19.60 | 0.020 | 0.00 | 1.000 | 0.20 | 0.58 |

Comparison : The calculated flow from HY12 is 2.26 $ft^3/s$ (0.064 $m^3/s$), which is equal to the calculated flow of 2.3 $ft^3/s$ (0.064 $m^3/s$) in example 4-4, part 2.

**Example 4-7 :** Determine interception capacity of curved vane grate in depressed triangular gutter.

**Program -** HY12

Input

Select: 4. HEC-12 Pavement Drainage
Select: 1. Gutter Flow, Grates, & Curb Openings
From the PROGRAM MENU, select option 1: Input Data File

DISCHARGE & ROADWAY DATA

| | |
|---|---|
| 1. Longitudinal Slope (ft/ft) | = 0.010 |
| 2. Pavement Cross Slope (ft/ft) | = 0.020 |
| 3. Gutter Cross Slope (ft/ft) | = 0.103 |
| 4. Manning's Coefficient | = 0.016 |
| 5. Gutter Width (ft) | = 2.000 |
| 6. Gutter Depression (in) | = 2.000 |
| 7. Discharge (cfs) | = Unknown (user input -1) |
| 8. Width of Spread (ft) | = 8.200 |

From the ANALYSIS OPTIONS, select option 2: Grate Inlet

GRATE INLET DATA

| | |
|---|---|
| 1. Grate Width (ft) | = 2.00 |
| 2. Grate Length (ft) | = 2.00 |
| 3. Grate Type (Select 3) | = Curved Vane |

Output

```
*************************************
***** ROADWAY DRAINAGE DESIGN *****
*************************************
```

| | |
|---|---|
| DESIGNER: | DATE: |
| PROJECT: | PROJECT NO.: |
| INLET NO. | STATION: |
| DRAINAGE AREA: Acres | DESIGN FREQUENCY: |

ROADWAY & DISCHARGE DATA

| Cross-Slope | S (ft/ft) | Sx (ft/ft) | n | Q (cfs) | T (ft) |
|---|---|---|---|---|---|
| Composite | 0.010 | 0.020 | 0.016 | 2.31 | 8.20 |

GUTTER FLOW

| W (ft) | Sw (ft/ft) | a (in) | Eo | d (ft) | V (fps) |
|---|---|---|---|---|---|
| 2.00 | 0.103 | 2.00 | 0.710 | 0.33 | 2.75 |

INLET INTERCEPTION

| Inlet Type | L (ft) | W (ft) | E | $Q_i$ (cfs) | $Q_b$ (cfs) |
|---|---|---|---|---|---|
| Curved Vane | 2.00 | 2.00 | 0.73 | 1.70 | 0.60 |

<u>Comparison</u> : The calculated interception capacity of the grate from HY12 is 1.70 $ft^3/s$ (0.048 $m^3/s$), which is approximately equal to the hand calculated interception capacity of 1.6 $ft^3/s$ (0.045 $m^3/s$) in example 4-7.

**Example 4-9 - Part 1 :** Determine interception capacity of curb-opening inlet.

**Program -** HY12

Input

Select: 4. HEC-12 Pavement Drainage
Select: 1. Gutter Flow, Grates, & Curb Openings
From the PROGRAM MENU, select option 1: Input Data File

DISCHARGE & ROADWAY DATA

| | |
|---|---|
| 1. Longitudinal Slope (ft/ft) | = 0.010 |
| 2. Pavement Cross Slope (ft/ft) | = 0.020 |
| 3. Gutter Cross Slope (ft/ft) | = 0.020 |
| 4. Manning's Coefficient | = 0.016 |
| 5. Gutter Width (ft) | = 2.000 |
| 6. Gutter Depression (in) | = 0.000 |
| 7. Discharge (cfs) | = 1.800 |
| 8. Width of Spread (ft) | = Unknown (user input -1) |

From the ANALYSIS OPTIONS, select option 3: Curb-Opening Inlet

CURB-OPENING INLET

| | |
|---|---|
| 1. Length of Inlet (ft) | = 9.80 |
| 2. Height of Inlet (in) | = 6.00 |

Output

```
*************************************
***** ROADWAY DRAINAGE DESIGN *****
*************************************
```

| | |
|---|---|
| DESIGNER: | DATE: |
| PROJECT: | PROJECT NO.: |
| INLET NO. | STATION: |
| DRAINAGE AREA: Acres | DESIGN FREQUENCY: |

ROADWAY & DISCHARGE DATA

| Cross-Slope | S (ft/ft) | Sx (ft/ft) | n | Q (cfs) | T (ft) |
|---|---|---|---|---|---|
| Uniform | 0.010 | 0.020 | 0.016 | 1.79 | 8.97 |

GUTTER FLOW

| W (ft) | Sw (ft/ft) | a (in) | Eo | d (ft) | V (fps) |
|---|---|---|---|---|---|
| 2.00 | 0.020 | 0.00 | 0.488 | 0.18 | 2.22 |

INLET INTERCEPTION

| Inlet Type | LT (ft) | L (ft) | E | $Q_i$ (cfs) | $Q_b$ (cfs) |
|---|---|---|---|---|---|
| Curb-Opening | 24.05 | 9.80 | 0.610 | 1.09 | 0.69 |

<u>Comparison</u> : The calculated interception capacity of the curb-opening inlet from HY12 is 1.09 $ft^3/s$ (0.031 $m^3/s$), which is approximately equal to the hand calculated interception capacity of 1.1 $ft^3/s$ (0.031 $m^3/s$) in example 4-9, part 1.

**Example 4-9-Part 2** : Determine interception capacity of curb-opening inlet in a depressed gutter.

**Program** - HY12

Input

Select: 4. HEC-12 Pavement Drainage
Select: 1. Gutter Flow, Grates, & Curb Openings
From the PROGRAM MENU, select option 1: Input Data File

DISCHARGE & ROADWAY DATA

| | |
|---|---|
| 1. Longitudinal Slope (ft/ft) | = 0.010 |
| 2. Pavement Cross Slope (ft/ft) | = 0.020 |
| 3. Gutter Cross Slope (ft/ft) | = 0.061 |
| 4. Manning's Coefficient | = 0.016 |
| 5. Gutter Width (ft) | = 2.000 |
| 6. Gutter Depression (in) | = 1.000 |
| 7. Discharge (cfs) | = 1.800 |
| 8. Width of Spread (ft) | = Unknown (user input -1) |

From the ANALYSIS OPTIONS, select option 3: Curb-Opening Inlet

CURB-OPENING INLET

| | |
|---|---|
| 1. Length of Inlet (ft) | = 9.80 |
| 2. Height of Inlet (in) | = 6.00 |

Output

```
*************************************
***** ROADWAY DRAINAGE DESIGN *****
*************************************
```

DESIGNER: DATE:
PROJECT: PROJECT NO.:
INLET NO. STATION:
DRAINAGE AREA: Acres DESIGN FREQUENCY:

ROADWAY & DISCHARGE DATA

| Cross-Slope | S (ft/ft) | Sx (ft/ft) | n | Q (cfs) | T (ft) |
|---|---|---|---|---|---|
| Composite | 0.010 | 0.020 | 0.016 | 1.79 | 8.14 |

GUTTER FLOW

| W (ft) | Sw (ft/ft) | a (in) | Eo | d (ft) | V (fps) |
|---|---|---|---|---|---|
| 2.00 | 0.061 | 1.00 | 0.634 | 0.25 | 2.40 |

INLET INTERCEPTION

| Inlet Type | LT (ft) | L (ft) | E | $Q_i$ (cfs) | $Q_b$ (cfs) |
|---|---|---|---|---|---|
| Curb-Opening | 14.51 | 9.80 | 0.860 | 1.55 | 0.24 |

Comparison : The calculated interception capacity of the curb-opening inlet from HY12 is 1.55 $ft^3/s$ (0.044 $m^3/s$), which is equal to the hand calculated interception capacity of 1.55 $ft^3/s$ (0.044 $m^3/s$) in example 4-9, part 2.

**Example 4-10 :** Determine interception capacity of combination of curb-opening inlet and curved vane grate in a depressed gutter section.

**Program -** HY12

Input

Select: 4. HEC-12 Pavement Drainage
Select: 1. Gutter Flow, Grates, & Curb Openings
From the PROGRAM MENU, select option 1: Input Data File

DISCHARGE & ROADWAY DATA

| | |
|---|---|
| 1. Longitudinal Slope (ft/ft) | = 0.010 |
| 2. Pavement Cross Slope (ft/ft) | = 0.020 |
| 3. Gutter Cross Slope (ft/ft) | = 0.061 |
| 4. Manning's Coefficient | = 0.016 |
| 5. Gutter Width (ft) | = 2.000 |
| 6. Gutter Depression (in) | = 1.000 |
| 7. Discharge (cfs) | = 1.800 |
| 8. Width of Spread (ft) | = Unknown (user input -1) |

From the ANALYSIS OPTIONS, select option 5: Curb-Opening & Grate Inlet

CURB-OPENING INLET

| | |
|---|---|
| 1. Length of Inlet (ft) | = 9.80 |
| 2. Height of Inlet (in) | = 6.00 |

GRATE INLET DATA

| | |
|---|---|
| 1. Grate Width (ft) | = 2.00 |
| 2. Grate Length (ft) | = 2.00 |
| 3. Grate Type (Select 3) | = Curved Vane |

Output

```
*************************************
***** ROADWAY DRAINAGE DESIGN *****
*************************************
```

DESIGNER: DATE:
PROJECT: PROJECT NO.:
INLET NO. STATION:
DRAINAGE AREA: Acres DESIGN FREQUENCY:

ROADWAY & DISCHARGE DATA

| Cross-Slope | S (ft/ft) | Sx (ft/ft) | n | Q (cfs) | T (ft) |
|---|---|---|---|---|---|
| Composite | 0.010 | 0.020 | 0.016 | 1.79 | 8.14 |

GUTTER FLOW

| W (ft) | Sw (ft/ft) | a (in) | Eo | d (ft) | V (fps) |
|---|---|---|---|---|---|
| 2.00 | 0.061 | 1.00 | 0.634 | 0.25 | 2.40 |

INLET INTERCEPTION

| Inlet Type | LT or W (ft) | L (ft) | E | $Q_i$ (cfs) | $Q_b$ (cfs) |
|---|---|---|---|---|---|
| Curb-Opening | 14.51 | 9.80 | 0.750 | 1.34 | 0.24 |
| Curved Vane | 2.00 | 2.00 | 0.950 | 0.42 | 0.02 |
| Combination | | | 0.989 | 1.77 | 0.02 |



Comparison : The calculated interception capacity of the curb-opening inlet from HY12 is 1.34 $ft^3/s$ (0.038 $m^3/s$), which is approximately equal to the calculated interception capacity of 1.3 $ft^3/s$ (0.038 $m^3/s$) in example 4-10. The calculated interception capacity of the curved vane grate from HY12 is 0.42 $ft^3/s$ (0.012 $m^3/s$), which is approximately equal to the calculated interception capacity of 0.40 $ft^3/s$ (0.011 $m^3/s$) in example 4-10. The calculated interception capacity of the combination of the curb-opening inlet and the curved vane grate from HY12 is 1.77 $ft^3/s$ (0.050 $m^3/s$), which is approximately equal to the calculated interception capacity of 1.70 $ft^3/s$ (0.049 $m^3/s$) from example 4-10.

**Example 4-12 - Part 1** : Determine interception capacity of curb-opening inlet in a sump.

**Program** - HY12

Input

Select: 4. HEC-12 Pavement Drainage
Select: 3. Inlets in a Sump

```
   INLET INTERCEPTION FOR SUMP CONDITION
SELECT PROGRAM PATH (Select 2. DETERMINE INLET CAPACITY)

SELECT GUTTER CONFIGURATION            Select 1. UNIFORM CROSS-SLOPE
ENTER PAVEMENT CROSS-SLOPE (FT/FT)?    0.02
SELECT INLET TYPE                      Select 2. CURB-OPENING INLET

   CURB-OPENING INLET
ENTER LENGTH OF INLET (FT)?            8.2
ENTER HEIGHT OF CURB OPENING (IN)?     5.2
ENTER DEPTH OF PONDING (FT)?           0.16
```

Output

```
********** OUTPUT RESULTS **********
DESIGN DEPTH OF PONDING = 0.16 FT
INLET CAPACITY          = 1.21 CFS
WIDTH OF SPREAD         = 8    FT
WEIR FLOW
```

Comparison : The calculated interception capacity of the curb-opening inlet from HY12 is 1.21 $ft^3/s$ (0.034 $m^3/s$), which is not equal to the calculated interception capacity of 1.6 $ft^3/s$ (0.045 $m^3/s$) in example 4-12, part 1. This difference in interception capacity results from the use of different weir coefficients; the HY12 program uses a weir coefficient of 1.25 while section 4.4.5.2 recommends a value of 1.6 be used.

**Example 4-12 - Part 2 :** Determine interception capacity of curb-opening inlet in a sump with a depressed gutter.

**Program -** HY12

Input

Select: 4. HEC-12 Pavement Drainage
Select: 3. Inlets in a Sump

```
   INLET INTERCEPTION FOR SUMP CONDITION
SELECT PROGRAM PATH (Select 2. DETERMINE INLET CAPACITY)

SELECT GUTTER CONFIGURATION                Select 2. DEPRESSED GUTTER
ENTER PAVEMENT CROSS-SLOPE (FT/FT)?        0.02
ENTER DEPRESSION OF FLOW LINE
BELOW UNIFORM CROSS-SLOPE (IN)?            1.0
ENTER WIDTH OF DEPRESSED GUTTER (FT)?      2.0
SELECT INLET TYPE                          Select 2. CURB-OPENING INLET

   CURB-OPENING INLET
ENTER LENGTH OF INLET (FT)?          8.2
ENTER HEIGHT OF CURB OPENING (IN)?   5.2
ENTER DEPTH OF PONDING (FT)?         0.16
```

Output

```
********** OUTPUT RESULTS **********
DESIGN DEPTH OF PONDING  = 0.16 FT
INLET CAPACITY           = 1.74 CFS
WIDTH OF SPREAD          = 8    FT
WEIR FLOW
```

Comparison : The calculated interception capacity of the curb-opening inlet from HY12 is 1.74 $ft^3/s$ (0.049 $m^3/s$), which is equal to the calculated interception capacity of 1.7 $ft^3/s$ (0.048 $m^3/s$) in example 4-12, part 2.

**Example 4-15 :** Determine inlet spacing.

**Program -** HY12

Input

Select: 4. HEC-12 Pavement Drainage
Select: 1. Gutter Flow, Grates, & Curb Openings
From the PROGRAM MENU, select option 1: Input Data File

DISCHARGE & ROADWAY DATA

| | |
|---|---|
| 1. Longitudinal Slope (ft/ft) | = 0.030 |
| 2. Pavement Cross Slope (ft/ft) | = 0.020 |
| 3. Gutter Cross Slope (ft/ft) | = 0.040 |
| 4. Manning's Coefficient | = 0.016 |
| 5. Gutter Width (ft) | = 2.000 |
| 6. Gutter Depression (in) | = 0.000 |
| 7. Discharge (cfs) | = 3.400 |
| 8. Width of Spread (ft) | = Unknown (user input -1) |

From the ANALYSIS OPTIONS, select option 2: Grate Inlet

GRATE INLET DATA

| | |
|---|---|
| 1. Grate Width (ft) | = 2.00 |
| 2. Grate Length (ft) | = 3.00 |
| 3. Grate Type (Select 5) | = P 1-7/8-4 (P 50x100) |

Output

```
*************************************
***** ROADWAY DRAINAGE DESIGN *****
*************************************
```

| | |
|---|---|
| DESIGNER: | DATE: |
| PROJECT: | PROJECT NO.: |
| INLET NO. | STATION: |
| DRAINAGE AREA: Acres | DESIGN FREQUENCY: |

ROADWAY & DISCHARGE DATA

| Cross-Slope | S (ft/ft) | Sx (ft/ft) | n | Q (cfs) | T (ft) |
|---|---|---|---|---|---|
| Uniform | 0.030 | 0.040 | 0.016 | 3.40 | 6.01 |

GUTTER FLOW

| W (ft) | Sw (ft/ft) | a (in) | Eo | d (ft) | V (fps) |
|---|---|---|---|---|---|
| 2.00 | 0.040 | 0.00 | 0.659 | 0.24 | 4.69 |

INLET INTERCEPTION

| Inlet Type | L (ft) | W (ft) | E | $Q_i$ (cfs) | $Q_b$ (cfs) |
|---|---|---|---|---|---|
| P-1-7/8-4 | 3.00 | 2.00 | 0.710 | 2.43 | 0.96 |

Comparison : The calculated interception capacity of the grate inlet from HY12 is 2.43 $ft^3/s$ (0.069 $m^3/s$), which is approximately equal to the hand calculated interception capacity of 2.4 $ft^3/s$ (0.068 $m^3/s$) for the first inlet in example 4-15. The calculated bypass flow of 0.96 $ft^3/s$ (0.027 $m^3/s$) is also approximately the same for both HY-12 and example 4-15. For this analysis, the calculated spread was 6.01 ft (1.82 m) and was less than the gutter width of 2.0 m (6.6 ft). so the gutter configuration was input as a uniform cross slope. The designer can then continue with the program and input the new flow rate to easily determine the spread, depth at the curb, and intercepted and bypass flows for subsequent grates. The inlet spacing can be adjusted to allow the spread to approach the maximum criteria for the design.

**Example 4-18 :** Determine interception and bypass flows for a P-50 grate inlet in a trapezoidal median ditch.

**Program -** HY12

Input

Select: 4. HEC-12 Pavement Drainage
Select: 4. Trapezoidal Channels with Grates such as Median Ditches or Side Ditches

SELECT COMPUTER PROGRAM PATH Select 2. COMPUTE CAPACITY OF CHANNEL

1. ENTER FIRST SIDESLOPE FACTOR (Z)? 6
2. ENTER SECOND SIDESLOPE FACTOR (Z)? 6
3. ENTER BOTTOM WIDTH OF CHANNEL (FT)? 2.0
4. ENTER LONGITUDINAL SLOPE OF CHANNEL (FT/FT)? 0.03
5. ENTER MANNING'S ROUGHNESS COEFFICIENT? 0.03
6. ENTER DESIGN FLOW DEPTH (FT)? 0.49

Output

```
*********** OUTPUT RESULTS ***********
NORMAL DEPTH                = .5 FT
DESIGN FLOW RATE            = 9.89 CFS
AREA                        = 2.51 SQFT
AVERAGE VELOCITY            = 3.94 FPS
TOPWIDTH                    = 8.02 FT
SUPERCRITICAL FLOW, FR#     = 1.24
```

Input Select 3. SELECT A GRATE INLET
1. ENTER GRATE WIDTH (FT)? 2.0
2. ENTER GRATE LENGTH (FT)? 2.0
3. ENTER NUMBER OF GRATE INLET? Select 1. Parallel Bar P-1-7/8 (P-50)

Output

```
******** OUTPUT RESULTS ********
INTERCEPTED FLOW            = 5.83 CFS
BY-PASS FLOW                = 4.07 FT (note: the units should be cfs)
INLET EFFICIENCY            = 0.59
```

Comparison : The calculated interception capacity of the grate in the median ditch from HY12 is 5.83 $ft^3/s$ (0.165 $m^3/s$), which is approximately equal to the hand calculated interception capacity of 5.7 $ft^3/s$ (0.16 $m^3/s$) in example 4-18.

**Example 5-1 - Part 1 :** Determine flow rate in a trapezoidal channel - riprap lined.

**Program -** Urban Drainage Design Software - Manning's Equation Program

Input

SELECT COMPUTER PROGRAM PATH Select 2. COMPUTE CAPACITY OF CHANNEL

| | |
|---|---|
| 1. ENTER FIRST SIDESLOPE FACTOR (Z)? | 3 |
| 2. ENTER SECOND SIDESLOPE FACTOR (Z)? | 3 |
| 3. ENTER BOTTOM WIDTH OF CHANNEL (FT)? | 2.6 |
| 4. ENTER LONGITUDINAL SLOPE OF CHANNEL (FT/FT)? | 0.01 |
| 5. ENTER MANNING'S ROUGHNESS COEFFICIENT? | 0.069 |
| 6. ENTER DESIGN FLOW DEPTH (FT)? | 1.6 |

Output

********** OUTPUT RESULTS **********

| | |
|---|---|
| DESIGN FLOW RATE | = 24.31 CFS |
| AREA | = 11.84 SQFT |
| AVERAGE VELOCITY | = 2.05 FPS |
| TOPWIDTH | = 12.2 FT |
| HYDRAULIC RADIUS | = 0.93 |
| SUBCRITICAL FLOW, FR# | = 0.37 |

Comparison : The calculated flow rate of the riprap lined channel is 24.31 $ft^3/s$ (0.688 $m^3/s$) from the computer program, which is approximately equal to the hand calculated flow rate of 25.6 $ft^3/s$ (0.725 $m^3/s$) in example 5-2, part 1.

**Example 5-1 - Part 2 :** Determine flow rate in a trapezoidal channel - buffalo grass lined.

**Program -** Urban Drainage Design Software - Manning's Equation Program

Input

SELECT COMPUTER PROGRAM PATH Select 2. COMPUTE CAPACITY OF CHANNEL

| | |
|---|---|
| 1. ENTER FIRST SIDESLOPE FACTOR (Z)? | 3 |
| 2. ENTER SECOND SIDESLOPE FACTOR (Z)? | 3 |
| 3. ENTER BOTTOM WIDTH OF CHANNEL (FT)? | 2.6 |
| 4. ENTER LONGITUDINAL SLOPE OF CHANNEL (FT/FT)? | 0.01 |
| 5. ENTER MANNING'S ROUGHNESS COEFFICIENT? | 0.055 |
| 6. ENTER DESIGN FLOW DEPTH (FT)? | 1.6 |

Output

********** OUTPUT RESULTS **********

| | |
|---|---|
| DESIGN FLOW RATE | = 30.5 CFS |
| AREA | = 11.84 SQFT |
| AVERAGE VELOCITY | = 2.58 FPS |
| TOPWIDTH | = 12.2 FT |
| HYDRAULIC RADIUS | = 0.93 |
| SUBCRITICAL FLOW, FR# | = 0.46 |

Comparison : The calculated flow rate of the buffalo grass lined channel is 30.5 $ft^3/s$ (0.864 $m^3/s$) from the program, which is approximately equal to the hand calculated flow rate of 32.1 $ft^3/s$ (0.909 $m^3/s$) in example 5-2, part 2.

**Example 5-2 and 5-3 :** Determine maximum and permissible shear stress in both a straight section and in a bend of trapezoidal channel.

**Program -** HYDRAIN (HYCHL subprogram)

Input

```
JOB EXAMPLE 5-1 PART 1
UNI 1
CHL 0.01 0.80 0
N   0.055 0.055
LVG D
TRP 0.90 3 3
BEN 4.5
END
```

Output

```
        ******  HYCHL  ****** (Version 2.0) ******          Date 07-19-95

 Commands Read From File: C:\TVGA\EXAMPLES\EX52&3.CHL
     JOBEXAMPLE 5-1 PART 1
     UNI1
 ** UNITS PARAMETER  =  1  (METRIC)
     CHL0.01 0.80 0
     N  0.050 0.050
 ** LOW  FLOW N VALUE=  .055
 ** SIDE SLOPE N VALUE=   .055
     LVGD
     TRP0.90 3 3
 ** LEFT SIDE SLOPE    3.0 AND RIGHT SIDE SLOPE    3.0
 ** THE BASE WIDTH OF THE TRAPEZOID (M)    .90
     BEN4.5
     END
***************END OF COMMAND FILE************

 ------------
 INPUT REVIEW
 ------------
  DESIGN PARAMETERS:
     DESIGN DISCHARGE (CMS):            .80
     CHANNEL SHAPE:                TRAPEZOIDAL
     CHANNEL SLOPE (M/M):              .010
     RADIUS OF CURV. FOR BEND (M):      4.5
 ----------------------------------------
 HYDRAULIC CALCULATIONS USING NORMAL DEPTH
 ----------------------------------------

                                  MAXIMUM
                         DESIGN   (NO BEND)
                         ------   -------
```

| | | |
|---|---|---|
| FLOW (CMS) | .80 | .34 |
| DEPTH (M) | .44 | .29 |
| AREA (M^2) | 1.04 | .52 |
| WETTED PERIMETER (M) | 3.80 | 2.75 |
| HYDRAULIC RADIUS (M) | .27 | .19 |
| VELOCITY (M/SEC) | .77 | .60 |
| MANNINGS N (LOW FLOW) | .055 | .055 |

---
STABILITY ANALYSIS
---

| CONDITION | LINING TYPE | PERMIS SHR ( N/M^2 ) | CALC. SHR ( N/M^2 ) | STAB. FACTOR | REMARKS |
|---|---|---|---|---|---|
| LOW FLOW LINING | | | | | |
| BOTTOM; STRAIGHT | VEGETATIVE D | 28.73 | 44.91 | .64 | UNSTABLE |
| BOTTOM; BEND | VEGETATIVE D | 28.73 | 68.97 | .42 | UNSTABLE |

SUPER ELEVATION (M) .05

RATIO OF SHEAR IN BEND TO SHEAR IN STRAIGHT CHANNEL = 1.54

*** NORMAL END OF HYCHL ***

Comparison : The maximum shear stress in the straight reach was 43.2 N/m$^2$ as determined in example 5-2. This value approximately equals 44.91 N/m$^2$, the calculated shear stress in the straight section from HYCHL. For the bend, example 5-2 computed a value of 69.1 N/m$^2$ and HYCHL calculated a comparable value of 68.97 N/m$^2$ for the maximum shear stress. For both the straight section and the bend and in both example 5-3 and HYCHL, the permissible shear stress was determined to be 28.73 N/m$^2$. The output from HYCHL as well as from example 5-3 shows that the channel lining is unstable.

**Example 7-1 - Part 1** - Determine diameter of a concrete pipe to convey a set flow.

**Program** - Urban Drainage Design Software - Manning's Equation Program

Input

CIRCULAR PIPE DESIGN

NOTE: PROGRAM SELECTS PIPE SIZES AND DESIGN CONDITIONS PRIMARILY ON FULL-FLOW.

Select 1. DETERMINE PIPE SIZE

| | |
|---|---|
| ENTER DESIGN FLOW (CFS)? | 17.6 |
| ENTER PIPE SLOPE (FT/FT)? | 0.015 |
| ENTER MANNING'S ROUGHNESS COEFFICIENT? | 0.013 |

Output

```
**********PIPE SIZE**********
PIPE DIAMETER     = 21 INCHES
****PARTIAL FLOW CONDITIONS****
DEPTH OF FLOW     = 1.31 FT
VELOCITY          = 9.14 FPS
****FLOWING FULL CONDITION****
MINIMUM REQUIRED SLOPE  = 0.0123 FT/FT
FLOWING FULL VELOCITY   = 7.32 FPS
```

Comparison: Both the computer program and the design example determined the pipe size to be 21 inch (533 mm) diameter.

**Example 7-1 - Part 2** - Determine diameter of a helically wound pipe to convey a set flow.

**Program** - Urban Drainage Design Software - Manning's Equation Program

Input

CIRCULAR PIPE DESIGN

NOTE: PROGRAM SELECTS PIPE SIZES AND DESIGN CONDITIONS PRIMARILY ON FULL-FLOW.

Select 1. DETERMINE PIPE SIZE

| | |
|---|---|
| ENTER DESIGN FLOW (CFS)? | 17.6 |
| ENTER PIPE SLOPE (FT/FT)? | 0.015 |
| ENTER MANNING'S ROUGHNESS COEFFICIENT? | 0.017 |

Output

```
**********PIPE SIZE**********
PIPE DIAMETER     = 24 INCHES
****PARTIAL FLOW CONDITIONS****
DEPTH OF FLOW     = 1.39 FT
VELOCITY          = 7.54 FPS
****FLOWING FULL CONDITION****
MINIMUM REQUIRED SLOPE  = 0.0104 FT/FT
FLOWING FULL VELOCITY   = 5.6 FPS
```

Comparison: Both the computer program and the design example determined the pipe size to be 24 inch (610 mm) diameter.

**Example 7-2 - Part 1** - Determine full flow pipe capacity and velocity for the concrete pipe of example 7-1.

**Program** - Urban Drainage Design Software - Manning's Equation Program

Input

CIRCULAR PIPE DESIGN

NOTE: PROGRAM SELECTS PIPE SIZES AND DESIGN CONDITIONS PRIMARILY ON FULL-FLOW.

Select 2. DETERMINE PIPE CAPACITY

| | |
|---|---|
| ENTER PIPE DIAMETER (INCHES)? | 21 |
| ENTER PIPE SLOPE (FT/FT)? | 0.015 |
| ENTER MANNING'S ROUGHNESS COEFFICIENT? | 0.013 |

Output

**********PIPE CAPACITY**********

| | |
|---|---|
| PIPE CAPACITY | = 19.4 CFS |
| VELOCITY | = 8.07 FPS |

Comparison: Both the computer program and the design example determined the pipe capacity to be 0.55 $m^3/s$ (19.4 $ft^3/s$) and the pipe velocity to be 2.45 m/s (8.0 ft/s).

**Example 7-2 - Part 2** - Determine full flow pipe capacity and velocity for the helically wound of example 7-1.

**Program** - Urban Drainage Design Software - Manning's Equation Program

Input

CIRCULAR PIPE DESIGN

NOTE: PROGRAM SELECTS PIPE SIZES AND DESIGN CONDITIONS PRIMARILY ON FULL-FLOW.

Select 2. DETERMINE PIPE CAPACITY

| | |
|---|---|
| ENTER PIPE DIAMETER (INCHES)? | 24 |
| ENTER PIPE SLOPE (FT/FT)? | 0.015 |
| ENTER MANNING'S ROUGHNESS COEFFICIENT? | 0.017 |

Output

```
**********PIPE CAPACITY*********
PIPE CAPACITY     = 21.18 CFS
VELOCITY          = 6.74 FPS
```

Comparison: Both the computer program and the design example determined the pipe capacity to be 0.60 $m^3/s$ (21.2 $ft^3/s$) and the pipe velocity to be 2.05 m/s (6.7 ft/s).

**Example 7-3 - Part 1:** Storm Drain Design Example - Determination of pipe sizes and inverts.

**Program :** HYDRAIN (HYDRA subprogram)

Input

```
JOB EXAMPLE 7-3 STORM DRAIN COMPUTATIONS
SWI 2
RAI 5 7.1 10 5.9 15 5.1 20 4.5 30 3.5 40 3.0 50 2.6 60 2.4 120 1.4
PDA 0.013 18 4.5 3 3 0.005
NEW 40-46
REM 40-41
STO 0.64 0.73 3
PIP 361 369.89 360.05 365.42
PNC 40 41 4 180 0 0
REM 41 TO 46
STO 0.35 0.73 2
PIP 328 360.05 349.22
PNC 41 46 2 90 0 0
HOL 1
NEW 42-45
REM 42-43
STO 0.64 0.73 3
PIP 361 369.89 360.05 365.42
PNC 42 43 4 180 0 0
REM 43-45
STO 0.35 0.73 2
PIP 328 360.05 349.22
PNC 43 45 4 90 0 0
HOL 2
NEW 44-48
REM 44-45
STO 1.63 0.25 6
PIP 14.1 347.68 349.22 343.21
PNC 44 45 4 180 0 0
REM 45-46
REC 2
STO 0.32 0.73 2
PIP 76.8 349.22 349.22
PNC 45 46 3 180 0 0
REM 46-47
REC 1
STO 0.32 0.73 2
PIP 14.1 349.22 347.68
PNC 46 47 4 135 0 0
REM 47-48
STO 0.0 0.70 6
PIP 55.8 347.68 344.50 331.18 330.62
PNC 47 48 2 180 2
END
```

Output

```
****** HYDRA ******* (Version 5.0) *****          Date 07-26-95

EXAMPLE 7-3 STORM DRAIN COMPUTATIONS
+ + + Commands Read From File C:\TVGA\EXAMPLES\EX7-3-1.HDA
 JOB
 SWI2
 RAI5 7.1 10 5.9 15 5.1 20 4.5 30 3.5 40 3.0 50 2.6 60 2.4 120 1.4

                    IDF CURVE

.71E+01*.......................................................
      .                                                       .
      .                                                       .
      . *                                                     .
.53E+01.                                                      .
      .   *                                                   .
      .                                                       .
      .     *                                                 .
      .                                                       .
.35E+01.                                                      .
      .         *                                             .
      .             *                                         .
      .                 *                                     .
      .                     *                                 .
.18E+01.                                                      .
      .                                                 *     .
      .                                                       .
      .                                                       .
      .                                                       .
.00E+00*.......................................................
      5.    21.    38.    54.    71.    87.    104.    120.

                 PLOT-DATA (TIME Vs.VALUE)
-----------------------------------------------------------------------------
   5.    7.10   30.    3.50  120.    1.40    0.    .00    0.    .00
  10.    5.90   40.    3.00    0.     .00    0.    .00    0.    .00
  15.    5.10   50.    2.60    0.     .00    0.    .00    0.    .00
  20.    4.50   60.    2.40    0.     .00    0.    .00    0.    .00
-----------------------------------------------------------------------------
 PDA0.013 18 4.5 3 3 0.005
 NEW40-46
 REM40-41
 STO0.64 0.73 3
 PIP361 369.84 360.05 365.42
+ + + Tc =   3.0 minutes
+ + + CA =    .5
+ + + Cover at upper manhole   2.85 ft
+ + + Cover at lower manhole   2.88 ft
```

```
+ + + Link #1, flow depth = 0.46 ft
 PNC40 41 4 180 0 0
 REM41 TO 46
 STO0.35 0.73 2
 PIP328 360.05 349.22
+ + + Tc =   3.8 minutes
+ + + CA =    .7
*** WARNING:  Pipe invert at D/S end dropped to meet minimum depth
   to invert criterion at D/S end
*** WARNING: Pipe invert at U/S dropped to meet cover criterion at U/S end
+ + + Link #2, flow depth = 0.55 ft
 PNC41 46 4 90 0 0
 HOL1
 NEW42-45
 REM42-43
 STO0.64 0.73 3
 PIP361 369.89 360.05 365.42
+ + + Tc =   5.0 minutes
+ + + CA =    .5
+ + + Cover at upper manhole    2.85 ft
+ + + Cover at lower manhole    2.88 ft
+ + + Link #3, flow depth = 0.46 ft
 PNC42 43 2 180 0 0
 REM43-45
 STO0.35 0.73 2
 PIP328 360.05 349.22
+ + + Tc =   3.8 minutes
+ + + CA =    .7
*** WARNING:  Pipe invert at D/S end dropped to meet minimum depth
   to invert criterion at D/S end
*** WARNING: Pipe invert at U/S dropped to meet cover criterion at U/S end
+ + + Link #4, flow depth = 0.55 ft
 PNC43 45 4 90 0 0
 HOL2
 NEW44-48
 REM44-45
 STO1.63 0.25 6
 PIP14.1 347.68 349.22 343.21
+ + + Tc =   6.0 minutes
+ + + CA =    .4
+ + + Cover at upper manhole    2.84 ft
+ + + Link #5, flow depth = 0.64 ft
 PNC44 45 4 180 0 0
 REM45-46
 REC2
 STO0.32 0.73 2
 PIP76.8 349.22 349.22
+ + + Tc =   6.1 minutes
+ + + CA =   1.4
+ + + Link #6, flow depth = 1.23 ft
```

```
 PNC45 46 4 180 0 0
 REM46-47
 REC1
 STO0.32 0.73 2
 PIP14.1 349.22 347.68
+ + + Tc =   6.3 minutes
+ + + CA =   2.3

*** WARNING: Inverts at D/S & U/S dropped to meet cover criterion at D/S end
+ + + Link #7, flow depth = 1.62 ft
 PNC46 47 4 135 0 0
 REM47-48
 STO0.0 0.70 6
 PIP55.8 347.68 344.50 331.18 330.62
+ + + Tc =   6.3 minutes
+ + + CA =   2.3
+ + + Link #8, flow depth = 1.42 ft
 PNC47 48 0 180 2
 END
END OF INPUT DATA.
```

*** 44-48 Pipe Design

| Link | Length (ft) | Diam (in) | Invert Up/Dn (ft) | Slope (ft/ft) | Depth Up/Dn (ft) | Min. Cover (ft) | Velocity Act/Full (ft/sec) | --Flow-- Act/Full (cfs) | Estimated Cost ($) |
|---|---|---|---|---|---|---|---|---|---|
| 5 | 14 | 18 | 343.21 | .00500 | 4.5 | 2.8 | 3.9 | 2.80 | 0. |
| | | | 343.14 | | 6.1 | | 4.2 | 7.45 | |
| 6 | 77 | 21 | 343.14 | .00500 | 6.1 | 4.2 | 5.2 | 9.34 | 0. |
| | | | 342.76 | | 6.5 | | 4.7 | 11.23 | |
| 7 | 14 | 24 | 342.58 | .00500 | 6.6 | 3.0 | 5.8 | 15.75 | 0. |
| | | | 342.51 | | 5.2 | | 5.1 | 16.04 | |
| 8 | 56 | 21 | 331.18 | .01004 | 16.5 | 12.0 | 7.5 | 15.72 | 0. |
| | | | 330.62 | | 13.9 | | 6.6 | 15.92 | |

LENGTH = 161. TOTAL LENGTH = 1539.
COST = 0. TOTAL COST = 0.

*** 40-46 Pipe Design

| Link | Length (ft) | Diam (in) | Invert Up/Dn (ft) | Slope (ft/ft) | Depth Up/Dn (ft) | Min. Cover (ft) | Velocity Act/Full (ft/sec) | --Flow-- Act/Full (cfs) | Estimated Cost ($) |
|---|---|---|---|---|---|---|---|---|---|
| 1 | 361 | 18 | 365.42 | .02734 | 4.5 | 2.8 | 7.7 | 3.54 | 0. |
| | | | 355.55 | | 4.5 | | 9.9 | 17.42 | |
| 2 | 328 | 18 | 355.42 | .03302 | 4.6 | 3.0 | 9.3 | 5.34 | 0. |
| | | | 344.60 | | 4.6 | | 10.8 | 19.14 | |

LENGTH = 689. TOTAL LENGTH = 689.
COST = 0. TOTAL COST = 0.

*** 42-45 Pipe Design

| Link | Length (ft) | Diam (in) | Invert Up/Dn (ft) | Slope (ft/ft) | Depth Up/Dn (ft) | Min. Cover (ft) | Velocity Act/Full (ft/sec) | --Flow-- Act/Full (cfs) | Estimated Cost ($) |
|---|---|---|---|---|---|---|---|---|---|
| 3 | 361 | 18 | 365.42 | .02734 | 4.5 | 2.8 | 7.7 | 3.54 | 0. |
| | | | 355.55 | | 4.5 | | 9.9 | 17.42 | |
| 4 | 328 | 18 | 355.42 | .03302 | 4.6 | 3.0 | 9.3 | 5.34 | 0. |
| | | | 344.60 | | 4.6 | | 10.8 | 19.14 | |

LENGTH = 689. TOTAL LENGTH = 689.
COST = 0. TOTAL COST = 0.

NORMAL END OF HYDRA



Comparison: For the design using the HYDRA subprogram, the initial upstream invert elevations for structures 40, 42, and 44 and the downstream outlet invert elevation for structure 48 were included in the input for the purpose of initial design criteria. The upstream invert elevations were determined by subtracting the minimum pipe diameter and minimum pipe cover from the proposed finished surface elevations. For the final design, the actual pipe size was checked to ensure that the minimum pipe size was used at these locations.

The HYDRA program determined an acceptable design for the storm drainage system components. Some of the values determined by the program are different than the values determined in design example 7-3. For example, the HYDRA used different slope values between the structures which changes the pipe invert elevations. This, in turn, changes the flow capacities of the pipes which effects the pipe size selection. However, the final flow rate value of 0.45 $m^3/s$ (15.76 $ft^3/s$) is exactly equal to the value determined in example 7-3. However, there are two notable differences between structures 45 and 46 (link 6 and 7), a 460 mm (18 in) storm drain was selected in example 7-3 while HYDRA selects a 530

mm (21 in) storm drain. Also, between structures 46 and 47 (links 7 and 8) a 530 mm (21 inch) storm drain was selected in example 7-3 while HYDRA selected a 555 mm (24 in) storm drain.

**Example 7-3 - Part 2:** Storm Drain Design Example - Determination of hydraulic grade line.

**Program :** HYDRAIN (HYDRA subprogram)

Input

```
JOB EXAMPLE 7-3 PART 2 HYDRAULIC GRADELINE ANALYSIS
SWI 2
HGL 1
RAI 5 7.1 10 5.9 15 5.1 20 4.5 30 3.5 40 3.0 50 2.6 60 2.4 120 1.4
PDA 0.013 18 4.5 3 3 0.005 21
TWE 332.92
NEW 40-46
REM 40-41
STO 0.64 0.73 3
PIP 361 369.89 360.05 365.42 354.60
PNC 40 41 4 180 0 0
REM 41 TO 46
STO 0.35 0.73 2
PIP 328 360.05 349.22 354.01 344.17
PNC 41 46 4 90 0 0
HOL 1
NEW 42-45
REM 42-43
STO 0.64 0.73 3
PIP 361 369.89 360.05 365.42 354.60
PNC 42 43 4 180 0 0
REM 43-45
STO 0.35 0.73 2
PIP 328 360.05 349.22 354.01 344.17
PNC 43 45 4 90 0 0
HOL 2
NEW 44-48
REM 44-45
STO 1.63 0.25 6
PIP 14.1 347.68 349.22 343.21 343.15
PNC 44 45 4 180 0 0
REM 45-46
REC 2
STO 0.32 0.73 2
PIP 76.8 349.22 349.22 342.86 342.23
PNC 45 46 4 180 0 0
REM 46-47
REC 1
STO 0.32 0.73 2
PIP 14.1 349.22 347.68 341.68 341.55
PNC 46 47 4 135 0 0
REM 47-48
STO 0.0 0.70 0
PIP 55.8 347.68 344.50 331.18 330.62
```

PNC 47 48 4 180 2
END

Output

```
      ****** HYDRA ******* (Version 5.0) *****          Date 08-01-95

 EXAMPLE 7-3 PART 2 HYDRAULIC GRADELINE ANALYSIS

+ + + Commands Read From File C:\TVGA\EXAMPLES\EX7-3-2.HDA
 JOB
 SWI2
 HGL1
 RAI5 7.1 10 5.9 15 5.1 20 4.5 30 3.5 40 3.0 50 2.6 60 2.4 120 1.4

                    IDF CURVE

 .71E+01*.......................................................
      .                                                        .
      .                                                        .
      . *                                                      .
 .53E+01.                                                      .
      .   *                                                    .
      .                                                        .
      .     *                                                  .
      .                                                        .
 .35E+01.                                                      .
      .         *                                              .
      .             *                                          .
      .                 *                                      .
      .                     *                                  .
 .18E+01.                                                      .
      .                                                   *    .
      .                                                        .
      .                                                        .
      .                                                        .
 .00E+00*.......................................................
       5.    21.    38.    54.    71.    87.   104.   120.

                 PLOT-DATA (TIME Vs.VALUE)
-----------------------------------------------------------------------------
   5.   7.10   30.   3.50  120.   1.40   0.    .00    0.    .00
  10.   5.90   40.   3.00   0.    .00    0.    .00    0.    .00
  15.   5.10   50.   2.60   0.    .00    0.    .00    0.    .00
  20.   4.50   60.   2.40   0.    .00    0.    .00    0.    .00
-----------------------------------------------------------------------------
  PDA0.013 18 4.5 3 3 0.005 21
  TWE332.92
  NEW40-46
  REM40-41
```

```
 STO0.64 0.73 3
 PIP361 369.89 360.05 365.42 354.60
+ + + Tc =   3.0 minutes
+ + + CA =    .5
+ + + Cover at upper manhole    2.85 ft
+ + + Link #1, flow depth = 0.45 ft
 PNC40 41 4 180 0 0
 REM41 TO 46
 STO0.35 0.73 2
 PIP328 360.05 349.22 354.01 344.17
+ + + Tc =   3.8 minutes
+ + + CA =    .7
+ + + Link #2, flow depth = 0.57 ft
 PNC41 46 4 90 0 0
 HOL1
 NEW42-45
 REM42-43
 STO0.64 0.73 3
 PIP361 369.89 360.05 365.42 354.60
+ + + Tc =   3.0 minutes
+ + + CA =    .5
+ + + Cover at upper manhole    2.85 ft
+ + + Link #3, flow depth = 0.45 ft
 PNC42 43 4 180 0 0
 REM43-45
 STO0.35 0.73 2
 PIP328 360.05 349.22 354.01 344.17
+ + + Tc =   3.8 minutes
+ + + CA =    .7
+ + + Link #4, flow depth 0.57 ft
 PNC43 45 4 90 0 0
 HOL2
 NEW44-48
 REM44-45
 STO1.63 0.25 6
 PIP14.1 347.68 349.22 343.21 343.15
+ + + Tc =   6.0 minutes
+ + + CA =    .4
+ + + Cover at upper manhole    2.84 ft
+ + + Link #5, flow depth = 0.67 ft
 PNC44 45 4 180 0 0
 REM45-46
 REC2
 STO0.32 0.73 6
 PIP76.8 349.22 349.22 342.86 342.23
+ + + Tc =   6.4 minutes
+ + + CA =   1.4
+ + + Link #6, flow depth 1.22 ft
 PNC45 46 4 180 0 0
 REM46-47
```

```
 REC1
 STO0.32 0.73 2
 PIP14.1 349.22 347.68 341.68 341.55
+ + + Tc =   6.3 minutes
+ + + CA =   2.3
+ + + Link #7, flow depth = 1.43 ft
 PNC46 47 4 135 0 0
 REM47-48
 STO0.0 0.70 0
 PIP55.8 347.68 344.50 331.18 330.62
+ + + Tc =   6.3 minutes
+ + + CA =   2.3
+ + + Link #8, flow depth = 1.43 ft
 PNC47 48 0 180 2
 END
END OF INPUT DATA.
```

*** 40-46 Pipe Design

| Link | Length (ft) | Diam (in) | Invert Up/Dn (ft) | Slope (ft/ft) | Depth Up/Dn (ft) | Min. Cover (ft) | Velocity Act/Full (ft/sec) | --Flow-- Act/Full (cfs) | Estimated Cost ($) |
|---|---|---|---|---|---|---|---|---|---|
| 1 | 361 | 18 | 365.42<br>354.60 | .02997 | 4.5<br>5.4 | 2.8 | 8.0<br>10.3 | 3.54<br>18.23 | 0. |
| 2 | 328 | 18 | 354.01<br>344.17 | .03000 | 6.0<br>5.0 | 3.4 | 9.0<br>10.3 | 5.35<br>18.24 | 0. |

LENGTH = 689. TOTAL LENGTH = 689.
COST = 0. TOTAL COST = 0.

*** 42-45 Pipe Design

| Link | Length (ft) | Diam (in) | Invert Up/Dn (ft) | Slope (ft/ft) | Depth Up/Dn (ft) | Min. Cover (ft) | Velocity Act/Full (ft/sec) | --Flow-- Act/Full (cfs) | Estimated Cost ($) |
|---|---|---|---|---|---|---|---|---|---|
| 3 | 361 | 18 | 365.42<br>354.60 | .02997 | 4.5<br>5.4 | 2.8 | 8.0<br>10.3 | 3.54<br>18.23 | 0. |
| 4 | 328 | 18 | 354.01<br>344.17 | .03000 | 6.0<br>5.0 | 3.4 | 9.0<br>10.3 | 5.35<br>18.24 | 0. |

LENGTH = 689. TOTAL LENGTH = 689.
COST = 0. TOTAL COST = 0.

*** 44-48

Pipe Design

| Link | Length (ft) | Diam (in) | Invert Up/Dn (ft) | Slope (ft/ft) | Depth Up/Dn (ft) | Min. Cover (ft) | Velocity Act/Full (ft/sec) | --Flow-- Act/Full (cfs) | Estimated Cost ($) |
|---|---|---|---|---|---|---|---|---|---|
| 5 | 14 | 18 | 343.21<br>343.15 | .00426 | 4.5<br>6.1 | 2.8 | 3.7<br>3.9 | 2.80<br>6.87 | 0. |
| 6 | 77 | 18 | 342.86<br>342.23 | .00820 | 6.4<br>7.0 | 4.7 | 6.2<br>5.4 | 9.33<br>9.54 | 0. |
| 7 | 14 | 21 | 341.68<br>341.54 | .00995 | 7.5<br>6.1 | 4.2 | 7.5<br>6.6 | 15.76<br>15.84 | 0. |
| 8 | 56 | 21 | 331.18<br>330.62 | .01004 | 16.5<br>13.9 | 12.0 | 7.5<br>6.6 | 15.75<br>15.92 | 0. |

LENGTH = 161. TOTAL LENGTH = 1539.
COST = 0. TOTAL COST = 0.

Hydraulic Gradeline Computations

| Pipe # | Downstream Node # | Hydraulic Gradeline Elev. | **Example 7-3 HGL Output (ft)** | Crown Elev. | Possible Surcharge | Ground Elev. |
|---|---|---|---|---|---|---|
| 1 | 41 | 355.05 | **354.47** | 356.10 | N | 360.05 |
| 2 | 46 | 344.73 | **345.35** | 345.67 | N | 349.22 |
| 3 | 43 | 355.05 | **354.47** | 356.10 | N | 360.05 |
| 4 | 45 | 344.73 | **344.40** | 345.67 | N | 349.22 |
| 5 | 45 | 344.18 | **344.23** | 344.65 | N | 349.22 |
| 6 | 46 | 343.43 | **343.58** | 343.73 | N | 349.22 |
| 7 | 47 | 342.97 | **343.02** | 343.29 | N | 347.68 |
| 8 | 48 | 332.92 | **332.92** | 332.37 | Y | 344.50 |

| Pipe # | Terminal Node # | Hydraulic Gradeline Elevation | **Example 7-3 HGL Output (ft)** | Ground Elevation |
|---|---|---|---|---|
| 1 | 40 | 367.35 | **367.16** | 369.89 |
| 3 | 42 | 367.35 | **367.16** | 369.89 |
| 5 | 44 | 345.35 | **344.43** | 347.68 |

NORMAL END OF HYDRA

Comparison : For the HGL analysis, HYDRA utilizes the energy loss methodology. In the HGL output from HYDRA, a column has been added in bold to show the values obtained from the HGL example of 7-3-Part 2, which also used the energy loss method.

**Example 8-2 - Part 2 :** Develop a stage-storage curve for the trapezoidal basin.

**Program :** Urban Drainage Design Software - Stormwater Management

Input

Select 2. Volume of Trapezoidal Basin.

VOLUME OF TRAPEZOIDAL BASINS

PROGRAM IS CAPABLE OF 50 INCREMENTS OF DEPTH

| | |
|---|---|
| 1. ENTER BASIN LENGTH (FT) ? | 85.3 |
| 2. ENTER BASIN WIDTH (FT) ? | 42.65 |
| 3. ENTER SIDESLOPE FACTOR (Z) ? | 3 |
| 4. ENTER NUMBER OF HEIGHT INCREMENTS ? | 10 |
| 5. ENTER INCREMENT HEIGHT (FT) ? | 0.66 |

MAXIMUM STORAGE CONDITIONS

| | | |
|---|---|---|
| MAXIMUM DEPTH OF STORAGE | = | 6.6 FT |
| MAXIMUM VOLUME OF STORAGE | = | 44182 CF |

DO YOU WANT TO DETERMINE VOLUME AT A GIVEN DEPTH (Y/N) Y

ENTER DEPTH OF WATER (FT) 0.66

VOLUME OF STORAGE = 2572 CF

DO YOU WANT TO DETERMINE VOLUME AT A GIVEN DEPTH (Y/N) N

DO YOU WANT HARD COPY (Y/N) Y

Output

TRAPEZOIDAL BASIN PARAMETERS

| | | |
|---|---|---|
| 1. BASIN LENGTH | = | 85.3 FT |
| 2. BASIN WIDTH | = | 42.65 FT |
| 3. SIDESLOPE FACTOR | = | 3 |
| 4. NUMBER OF HEIGHT INCREMENTS | = | 10 |
| 5. HEIGHT INCREMENT | = | 0.66 FT |

STAGE-STORAGE CURVE FOR TRAPEZOIDAL BASINS

| DEPTH (FT) | BASIN VOLUME (CF) |
|---|---|
| 0.00 | 0 |
| 0.66 | 2572 |
| 1.32 | 5499 |

| | |
|---|---|
| 1.98 | 8801 |
| 2.64 | 12501 |
| 3.30 | 16617 |
| 3.96 | 21171 |
| 4.62 | 26184 |
| 5.28 | 31676 |
| 5.94 | 37669 |
| 6.60 | 44182 |

Comparison : During the execution of the program, specific storage volume for any given depth can be determined, as shown above. Additionally, the program will output a table for the basin volumes at the specified depth increments. The output table shown above is identical to the stage-storage curve developed in example 8-2, part 2, with the exception that the output of the program is in $ft^3$.

**Example 8-3 :** Develop a stage-storage curve for the storm drain pipe.

**Program :** Urban Drainage Design Software - Stormwater Management

Input

Select 1. Volume of Circular pipe.

VOLUME OF CIRCULAR PIPE BASINS

PROGRAM IS CAPABLE OF 50 INCREMENTS OF DEPTH

| | |
|---|---|
| 1. ENTER BASIN LENGTH (FT) ? | 820 |
| 2. ENTER PIPE DIAMETER (FT) ? | 5.0 |
| 3. ENTER BASIN SLOPE (FT/FT) ? | 0.01 |
| 4. ENTER NUMBER OF HEIGHT INCREMENTS ? | 7 |
| 5. ENTER INCREMENT HEIGHT (FT) ? | 0.7 |

MAXIMUM STORAGE CONDITIONS

| | | |
|---|---|---|
| MAXIMUM DEPTH OF STORAGE | = | 4.91 FT |
| MAXIMUM VOLUME OF STORAGE | = | 4713 CF |

| | |
|---|---|
| DO YOU WANT TO DETERMINE VOLUME AT A GIVEN DEPTH (Y/N) | Y |
| ENTER DEPTH OF WATER (FT) | 0.7 |
| VOLUME OF STORAGE = | 48 CF |
| DO YOU WANT TO DETERMINE VOLUME AT A GIVEN DEPTH (Y/N) | N |
| DO YOU WANT HARD COPY (Y/N) | Y |

Output

CIRCULAR PIPE BASIN PARAMETERS

| | | |
|---|---|---|
| 1. BASIN LENGTH | = | 820 FT |
| 2. PIPE DIAMETER | = | 5.0 FT |
| 3. BASIN SLOPE | = | 0.01 FT/FT |
| 4. NUMBER OF HEIGHT INCREMENTS | = | 7 |
| 5. HEIGHT INCREMENT | = | 0.70 |

STAGE-STORAGE CURVE FOR CIRCULAR PIPE BASINS

| DEPTH (FT) | BASIN VOLUME (CF) |
|---|---|
| 0.00 | 0 |
| 0.7 | 48 |
| 1.4 | 259 |

| | |
|---|---|
| 2.10 | 689 |
| 2.80 | 1359 |
| 3.50 | 2270 |
| 4.20 | 3404 |
| 4.90 | 3713 |

Comparison : During the execution of the program, specific storage volume for any given depth can be determined, as shown above. Additionally, the program will output a table for the basin volumes at the specified depth increments. The output table shown above is similar to the stage-storage curve developed in example 8-3, with the exception that the output of the program is in $ft^3$.

**Example 8-7 :** Develop a stage-discharge curve for the discharge pipe.

**Program :** HYDRAIN - (Subprogram HY8)

Input Input the pipe data as determined from example 8-7.

Output

FHWA CULVERT ANALYSIS
HY-8, VERSION 4.1

| C U L V | SITE DATA INLET ELEV. (FT) | OUTLET ELEV. (FT) | CULVERT LENGTH (FT) | CULVERT SHAPE, MATERIAL, INLET BARRELS SHAPE MATERIAL | SPAN (FT) | RISE (FT) | MANNING n | INLET TYPE |
|---|---|---|---|---|---|---|---|---|
| 1 | 32.80 | 26.24 | 164.13 | 1 CSP | 2.50 | 2.50 | .024 | CONVENTIONAL |

PERFORMANCE CURVE FOR CULVERT # 1 - 1 ( 2.5 BY 2.5 ) CSP

| DIS-CHARGE FLOW (cfs) | HEAD-WATER ELEV. (ft) | INLET CONTROL DEPTH (ft) | OUTLET CONTROL DEPTH (ft) | FLOW TYPE < F4 > | NORMAL DEPTH (ft) | CRITICAL DEPTH (ft) | OUTLET VEL. (fps) | OUTLET DEPTH (ft) |
|---|---|---|---|---|---|---|---|---|
| 0 | 32.80 | 0.00 | 0.00 | 0-NF | 0.00 | 0.00 | 0.00 | 0.00 |
| 4 | 33.66 | 0.86 | 0.86 | 1-S2n | 0.51 | 0.65 | 5.65 | 0.51 |
| 8 | 34.06 | 1.26 | 1.26 | 1-S2n | 0.71 | 0.93 | 6.91 | 0.71 |
| 12 | 34.41 | 1.61 | 1.61 | 1-S2n | 0.88 | 1.16 | 7.75 | 0.88 |
| 16 | 34.73 | 1.93 | 1.93 | 1-S2n | 1.03 | 1.35 | 8.35 | 1.03 |
| 19 | 34.99 | 2.19 | 2.19 | 1-S2n | 1.15 | 1.49 | 8.78 | 1.15 |
| 24 | 35.36 | 2.56 | 2.56 | 5-S2n | 1.31 | 1.66 | 9.25 | 1.31 |
| 28 | 35.71 | 2.91 | 2.91 | 5-S2n | 1.44 | 1.80 | 9.90 | 1.40 |
| 32 | 36.09 | 3.29 | 3.29 | 5-S2n | 1.57 | 1.92 | 9.87 | 1.57 |
| 36 | 36.52 | 3.72 | 3.72 | 5-S2n | 1.71 | 2.03 | 10.09 | 1.71 |
| 40 | 37.00 | 4.20 | 4.20 | 5-S2n | 1.86 | 2.11 | 10.24 | 1.86 |

El. inlet face invert 32.80 ft El. outlet invert 26.24 ft
El. inlet throat invert 0.00 ft El. inlet crest 0.00 ft

***** SITE DATA ***** CULVERT INVERT **********

| | |
|---|---|
| INLET STATION (FT) | 164.00 |
| INLET ELEVATION (FT) | 32.80 |
| OUTLET STATION (FT) | 0.00 |
| OUTLET ELEVATION (FT) | 26.24 |
| NUMBER OF BARRELS | 1 |
| SLOPE (V-FT/H-FT) | 0.0400 |
| CULVERT LENGTH ALONG SLOPE (FT) | 164.13 |

***** CULVERT DATA SUMMARY **********

| | |
|---|---|
| BARREL SHAPE | CIRCULAR |
| BARREL DIAMETER | 2.50 FT |
| BARREL MATERIAL | CORRUGATED STEEL |
| BARREL MANNING'S N | 0.024 |
| INLET TYPE | CONVENTIONAL |
| INLET EDGE AND WALL | SQUARE EDGE WITH HEADWALL |
| INLET DEPRESSION | NONE |

TAILWATER

CONSTANT WATER SURFACE ELEVATION 10.00

ROADWAY OVERTOPPING DATA

| | |
|---|---|
| WEIR COEFFICIENT | 2.90 |
| EMBANKMENT TOP WIDTH (FT) | 5.00 |
| CREST LENGTH (FT) | 16.40 |
| OVERTOPPING CREST ELEVATION (FT) | 38.00 |

Comparison: The discharge rating curve developed by HY8 shows that at a peak discharge of 0.55 $m^3/s$ (19.4 $ft^3/s$), the head required is approximately 0.67 m (2.2 ft).

**Example 8-9** : Develop the routed outflow hydrograph.

**Program** : Urban Drainage Design Software - Stormwater Management

Input

Select 5. Reservoir Routing

RESERVOIR ROUTING

IS DATA STORED ON A DISK (Y/N)? N
STAGE-DISCHARGE RELATIONSHIP
PROGRAM IS CAPABLE OF HANDLING 50 VOLUMES
ENTER NUMBER OF VOLUMES 11
ENTER HEIGHT INCREMENT (FT) 0.66

ENTER BASIN VOLUMES
NOTE: FIRST ENTRY SHOULD BE ZERO (0). PROGRAM ASSUMES BASIN IS EMPTY AT START.

VOLUME NO. 1
ENTER VOLUME OF BASIN (CF) 0.0

VOLUME NO. 2
ENTER VOLUME OF BASIN (CF) 2572

(Subsequent entry of data for volumes 3 through 11 is: 5499, 8801, 12501, 16617, 21171, 26184, 31676, 37669, and 44182 $ft^3$. These values are from example 8-2, with the units converted from ac-ft to $ft^3$.)

STAGE DISCHARGE RELATIONSHIP

PROGRAM IS CAPABLE OF HANDLING 50 DISCHARGES.
NOTE: NUMBER OF DISCHARGES MUST BE THE SAME AS THE VOLUMES.
NOTE: HEIGHT INCREMENT MUST BE THE SAME AS FOR VOLUMES.

ENTER BASIN DISCHARGES
NOTE: FIRST ENTRY SHOULD BE ZERO (0). PROGRAM ASSUMES NO DISCHARGE AT START.

DISCHARGE NO.1
ENTER DISCHARGE FROM BASIN (CFS) 0

DISCHARGE NO.2
ENTER DISCHARGE FROM BASIN (CFS) 0.6

(Subsequent entry of data for discharges 3 through 11 is: 1.0, 1.2, 1.4, 10.9, 14.8, 17.7, 20.8, 62.5, and 80.9 $ft^3/s$. These values are obtained from the total discharge of the basin listed in table 8-3.)

INFLOW HYDROGRAPH
PROGRAM IS CAPABLE OF HANDLING 100 HYDROGRAPH POINTS.
ENTER NUMBER OF HYDROGRAPH POINTS. 39
ENTER TIME STEP INCREMENT (MIN) 3.42
ENTER HYDROGRAPH VALUES
NOTE: FIRST ENTRY SHOULD BE ZERO (0). PROGRAM ASSUMES NO FLOW AT START OF ROUTING.

ENTRY NO. 1
DESIGN FLOW (CFS) 0.0

ENTRY NO. 2
DESIGN FLOW (CFS) 1.41

(Subsequent entry of data for inflow hydrograph flows 3 through 39 is: 2.47, 4.24, 6.36, 11.65, 17.30, 23.66, 28.60, 31.07, 30.37, 27.90, 24.37, 20.13, 16.95, 13.77, 11.30, 9.18, 7.77, 6.36, 5.30, 3.88, 3.18, 1.77, 1.06, 0.0, 0.0, 0.0, 0.0, 0.0, 0.0, 0.0, 0.0, 0.0, 0.0, 0.0, 0.0, and 0.0 $ft^3/s$. These values are from the routing table in example 8-8 with the appropriate units conversion.)

ALL THE RESULTS INCLUDING ROUTING OUTPUT IS GIVEN IN THE OUTPUT FILE. PLEASE ENTER DRIVE AND NAME OF OUTPUT FILE SUCH AS A:RR.OUT -

<u>Output</u>

OUTPUT RESULTS

MAXIMUM STORAGE = 27683 CF
MAXIMUM DEPTH OF WATER = 4.8 FT
MAXIMUM DISCHARGE RATE = 18.5 CFS

STAGE, DISCHARGE, STORAGE, STORAGE INDICATOR FOR BASIN

| STAGE (FT) | DISCHARGE (CFS) | STORAGE (CF) | STORAGE INDICATOR |
|---|---|---|---|
| 0.00 | 0.0 | 0 | 0.00 |
| 0.66 | 0.6 | 2572 | 12.83 |
| 1.32 | 1.0 | 5499 | 27.30 |
| 1.98 | 1.2 | 8801 | 43.49 |
| 2.64 | 1.4 | 12501 | 61.62 |
| 3.30 | 10.9 | 16617 | 86.43 |
| 3.96 | 14.8 | 21171 | 110.57 |
| 4.62 | 17.7 | 26184 | 136.45 |
| 5.28 | 20.8 | 31676 | 164.77 |
| 5.94 | 62.5 | 37669 | 214.82 |
| 6.60 | 80.9 | 44182 | 255.76 |

RESERVOIR ROUTING

| TIME (MIN) | INFLOW (CFS) | DISCHARGE (CFS) | **DISCHARGE EX. 8-9 (CFS)** | STORAGE (CF) | STAGE (FT) |
|---|---|---|---|---|---|
| 0 | 0.0 | 0.0 | **0.0** | 0 | 0.00 |
| 3 | 1.4 | 0.0 | **0.0** | 141 | 0.03 |
| 7 | 2.5 | 0.1 | **0.0** | 523 | 0.12 |
| 10 | 4.2 | 0.3 | **0.4** | 1171 | 0.26 |
| 14 | 6.4 | 0.5 | **0.4** | 2179 | 0.49 |
| 17 | 11.7 | 0.8 | **0.7** | 3894 | 0.85 |
| 21 | 17.3 | 1.1 | **1.1** | 6675 | 1.40 |
| 24 | 23.7 | 1.3 | **1.4** | 10634 | 2.10 |
| 27 | 28.6 | 7.4 | **7.4** | 15103 | 2.86 |
| 31 | 31.1 | 13.0 | **13.4** | 19126 | 3.54 |
| 34 | 30.4 | 15.6 | **15.9** | 22494 | 4.09 |
| 38 | 27.9 | 17.1 | **17.3** | 25123 | 4.52 |
| 41 | 24.4 | 18.1 | **18.0** | 26876 | 4.82 |
| 44 | 20.1 | 18.5 | **18.3** | 27683 | 5.00 |
| 48 | 17.0 | 18.5 | **18.3** | 27682 | 5.09 |
| 51 | 13.8 | 18.2 | **18.0** | 27064 | 5.10 |
| 55 | 11.3 | 17.6 | **17.6** | 25966 | 5.05 |
| 58 | 9.2 | 16.8 | **16.9** | 24546 | 4.95 |
| 62 | 7.8 | 15.8 | **15.9** | 22942 | 4.81 |
| 65 | 6.4 | 14.8 | **14.8** | 21245 | 4.65 |
| 68 | 5.3 | 13.4 | **13.8** | 19543 | 4.47 |
| 72 | 3.9 | 12.0 | **12.0** | 17880 | 4.26 |
| 75 | 3.2 | 10.2 | **9.9** | 16326 | 4.05 |
| 79 | 1.8 | 7.3 | **7.1** | 15040 | 3.82 |
| 82 | 1.1 | 5.0 | **4.9** | 14070 | 3.58 |
| 86 | 0.0 | 3.3 | **2.5** | 13325 | 3.35 |
| 89 | 0.0 | 2.0 | **2.1** | 12777 | 3.13 |
| 92 | 0.0 | 1.4 | **1.8** | 12425 | 2.96 |
| 96 | 0.0 | 1.4 | **1.4** | 12140 | 2.83 |
| 99 | 0.0 | 1.4 | **1.4** | 11858 | 2.74 |
| 103 | 0.0 | 1.4 | **1.4** | 11580 | 2.68 |
| 106 | 0.0 | 1.3 | **1.4** | 11304 | 2.63 |
| 109 | 0.0 | 1.3 | **1.4** | 11032 | 2.58 |
| 113 | 0.0 | 1.3 | **1.4** | 10762 | 2.54 |
| 116 | 0.0 | 1.3 | **1.1** | 10496 | 2.49 |
| 120 | 0.0 | 1.3 | **1.1** | 10232 | 2.45 |
| 123 | 0.0 | 1.3 | **1.1** | 9971 | 2.40 |
| 127 | 0.0 | 1.2 | **1.1** | 9714 | 2.36 |
| 130 | 0.0 | 1.2 | **1.1** | 9459 | 2.32 |



Comparison: The outflow hydrograph ordinates obtained in example 8-9 have been added in bold to the output table from the computer program. The values obtained in the example are very close to the values obtained in the computer program, with slight variations possibly due to rounding and from manually obtaining values from the storage indicator graph.

# APPENDIX C. GUTTER FLOW RELATIONSHIPS DEVELOPMENT

## C.1 MEAN VELOCITY IN A TRIANGULAR CHANNEL

Flow time in curbed gutters is one component of the time of concentration for the contributing drainage area to the inlet. Velocity in a triangular gutter varies with the flow rate, and the flow rate varies with distance along the gutter, i.e., both the velocity and flow rate in the gutter are spatially varied. Figure C-1 is a sketch of the concept used to develop average velocity in a reach of channel.

Time of flow can be estimated by use of an average velocity obtained by integration of the Manning equation for a triangular channel with respect to time. The assumption of this solution is that the flow rate in the gutter varies uniformly from $Q_1$ at the beginning of the section to $Q_2$ at the inlet.

$$Q \quad \frac{0.38}{n} S_L^{0.5} S_x^{1.67} T^{2.67} \quad K_1 T^{2.67} \tag{C-1}$$

$$K_1 \quad \frac{0.38}{n} S_L^{0.5} S_x^{1.67}$$

and,

$$V \quad \frac{Q}{T^2 S_x/2} \quad \frac{0.752}{n} S_L^{0.5} S_x^{0.67} T^{0.67} \quad K_2 T^{.67} \tag{C-2}$$

$$K_2 \quad \frac{0.752}{n} S_L^{0.5} S_x^{0.67}$$

Where: $n$ = Manning coefficient
$S_L$ = Gutter longitudinal slope, m/m (ft/ft)
$S_x$ = Gutter transverse scope, m/m (ft/ft)
$T$ = Spread, m (ft)
$Q$ = Gutter flow, $m^3/s$, ($ft^3/s$)
$V$ = Gutter flow velocity, m/s (ft/s)

From equation C-1:

$$T^{0.67} \quad (Q/K_1)^{0.25} \tag{C-3}$$

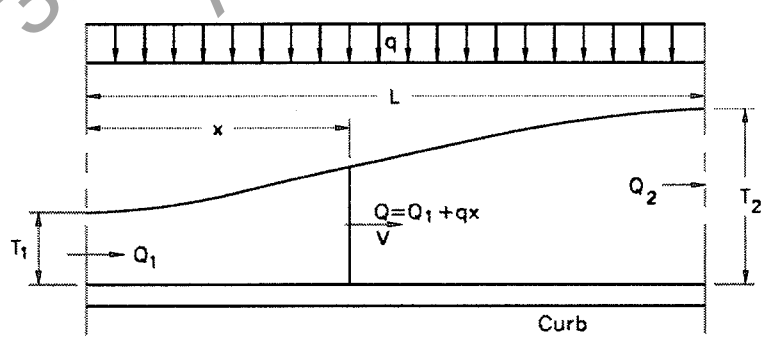


**Figure C-1. Conceptual sketch of spatially varied gutter flow.**

From equation C-1:

$$T^{0.67} = (Q/K_1)^{0.25} \tag{C-3}$$

Substituting equation C-3 into equation C-2 results in:

$$V = \frac{dx}{dt} = \frac{K_2}{K_1^{0.25}} Q^{0.25}$$

or

$$\frac{dx}{Q^{0.25}} = \frac{K_2}{K_1^{0.25}} dt \tag{C-4}$$

Where: dx = change in longitudinal distance, m (ft)
dt = change in time, s

Here, $Q = Q_1 + qx$ and therefore $dQ = qdx$. Combining these with equation C-4 and performing the integration, the following equation results:

$$t = 4/3\ (Q_2^{0.75} - Q_1^{0.75})\ \frac{K_1^{0.25}}{K_2\ q} \tag{C-5}$$

Then, the average velocity, $V_a$ can be computed by dividing the length, L, by time, t:

$$V_a = \frac{L}{t} = \frac{3\ K_2\ q}{4\ K_1^{0.25}} \left( \frac{L}{Q_2^{0.75} - Q_1^{0.75}} \right) \tag{C-6}$$

Upon substitution of $L = (Q_2 - Q_1)/q$ and $Q = K_1 T^{2.67}$, $V_a$ becomes:

$$V_a = (3/4)\ K_2\ \frac{(T_2^{2.67} - T_1^{2.67})}{(T_2^2 - T_1^2)} \tag{C-7}$$

To determine spread, $T_a$, where velocity is equal to the average velocity, let $V = V_a$:

$$K_2\ T_a^{0.67} = 3/4\ K_2\ \frac{T_2^{2.67} - T_1^{2.67}}{T_2^2 - T_1^2} \tag{C-8}$$

which results in:

$$\frac{T_a}{T_2} = 0.65 \left[ \frac{1 - (T_1/T_2)^{2.67}}{1 - (T_1/T_2)^2} \right]^{1.5} \tag{C-9}$$

Solving equation C-9 for values of $T_1/T_2$ gives results shown in the table C-1.

The average velocity in a triangular channel can be computed by using table C-1 to solve for the spread, $T_a$, where the average velocity occurs. Where the initial spread is zero, average velocity occurs where the spread is 65 percent of the spread at the downstream end of the reach.

**Table C-1. Spread at average velocity in a reach of triangular gutter.**

| $T_1/T_2$ | 0 | 0.1 | 0.2 | 0.3 | 0.4 | 0.5 | 0.6 | 0.7 | 0.8 | 0.9 | 1.0 |
|---|---|---|---|---|---|---|---|---|---|---|---|
| $T_a/T_2$ | 0.65 | 0.66 | 0.68 | 0.70 | 0.74 | 0.77 | 0.82 | 0.86 | 0.91 | 0.95 | 1.0 |

## C.2 SPREAD DISCHARGE RELATIONSHIP FOR COMPOUND CROSS SLOPES

The computations needed to develop charts relating spread to conveyance for a gutter section are not original with this circular. The purpose for including the procedure, as well as the procedure for developing charts for parabolic sections, is to encourage agencies to develop charts for sections which they use as standards.

The computations required for the development of charts involves dividing the channel into two sections at the break in cross slope and use of the integrated form of the Manning equation (equation C-10) to compute the conveyance in each section. Total conveyance in the channel is equal to the sum of the parts. The following example provides a step-by-step procedure for developing spread-discharge relationship.

$$Q = \frac{0.38}{n} S_x^{1.67} S_L^{0.5} T^{2.67} \qquad \text{(C-10)}$$

$$Q = \frac{0.38\ S_L^{0.5}\ d^{2.67}}{n\ S_X}$$



***Example C-1***

***Given:***

| | | |
|---|---|---|
| $W$ | = | *0.6 m (2 ft)* |
| $a$ | = | *50 mm (2 in)* |
| $T$ | = | *1.8 m (6 ft)* |
| $S_x$ | = | *0.04* |
| $K$ | = | $Q/S^{0.5}$ |
| $n$ | = | *0.016* |

***Find:*** *Develop K - T relationship*

***Solution:***

*Step 1:* *Compute $d_1$ and $d_2$ where $d_1$ is the depth of flow at the curb and $d_2$ is the depth at the break in the cross slope (see sketch, chart 2).*

$d_2 = (T - W)S_x = (1.8 - 0.6)\ 0.04$
$d_2 = 0.048$ *m (0.16 ft)*

$d_1 = TS_x + a = 1.8\ (0.04) + 0.050$
$d_1 = 0.122$ *m (0.40 ft)*

*Step 2: Compute conveyance in section outside of gutter.*

$$Q_s / S^{0.5} = (0.38\ d_2^{2.67}) / nS_x$$

$$Q_s / S^{0.5} = (0.38)\ (0.048^{2.67})/[(0.16)(0.04)]$$
$$Q_s / S^{0.5} = 0.18\ m^3/s\ \ (6.4\ ft^3/s)$$

*Step 3: Compute conveyance in the gutter.*

$$Q_w / S^{0.5} = 0.38\ (d_1^{2.67} - d_2^{2.67}) / nS_w$$

$$Q_w / S^{0.5} = \frac{0.38\ (0.122^{2.67} - 0.048^{2.67})}{0.016\ (0.0833 + 0.04)}$$

$$Q_w / S^{0.5} = 0.64\ m^3/s\ (22.6\ ft^3/s)$$

*Step 4: Compute total conveyance by adding results from Steps 2 and 3.*

$$0.18 + 0.64 = 0.82\ m^3/s\ (28.9\ ft^3/s)$$

*Step 5: Repeat Steps 1 through 4 for other widths of spread, T.*

*Step 6: Repeat Steps 1 through 5 for other cross slopes, $S_x$.*

*Step 7: Plot curves of K - T relationship as shown in Figure 4-3, Section 4.3.2.2.*

## C.3 SPREAD - DISCHARGE RELATIONSHIPS FOR PARABOLIC CROSS SECTIONS

A parabolic cross section can be described by the equation:

$$y = ax - bx^2 \qquad \text{(C-11)}$$

where:
- a = 2H/B
- b = $H/B^2$
- H = crown height, m (ft)
- B = half width, m (ft)

The relationships between a, b, crown height, H, and half width, B, are shown in figure C-2.

To determine total gutter flow, divide the cross section into segments of equal width and compute the discharge for each segment by Manning's equation. The parabola can be approximated very closely by 0.6 m (2 ft) chords. The total discharge will be the sum of the discharges in all segments.

The crown height, H, and half width, B, vary from one design to another. Since discharge is directly related to the configuration of the cross section, discharge-depth (or spread) relationships developed for one configuration are not applicable for roadways of other configurations. For this reason, the relationships must be developed for each roadway configuration.

The following procedure illustrates the development of a conveyance curve for a parabolic pavement section with a half width, B = 7.3 m (23.9 ft) and a crown height, H = 0.15 m (0.5 ft). The procedure is presented with reference to Table C-2. Conveyance computations for spreads of 0.6 m (2 ft), 1.2 m and 1.8 m (6 ft) are shown for illustration purposes.



Procedure:

Column 1: Choose the width of segment, $\Delta x$, for which the vertical rise will be computed and recorded in column 1.

Column 2: Compute the vertical rise using equation C-11. For H = 0.15 m (0.5 ft) and B = 7.3 m (24 ft), equation C-11 becomes:

$$y = 0.04x - 0.0028x^2$$

Column 3: Compute the mean rise, $y_a$, of each segment and record in column 3.

Column 4: Depth of flow at the curb, d, for a given spread, T, is equal to the vertical rise, y, shown in column 2. The average flow depth for any segment is equal to depth at the curb for the spread minus the mean rise in that segment. For example, depth at curb for a 0.6 m (2 ft) spread is equal to 0.023 m (0.077 ft). The mean rise in the segment is equal to 0.012 m (0.038 ft). Therefore, average flow depth in the segment, d = 0.023 - 0.012 = 0.011 m (0.036 ft). This will be further illustrated for column 6.

Column 5: Conveyance for a segment can be determined from the equation:

$$K = \frac{1.0}{n} A\, d^{2/3} = \frac{1.0}{n} (\Delta x)\, d^{5/3}$$

Only "d" in the above equation varies from one segment to another. Therefore, the equation can be operated on with a summation of $d^{5/3}$.

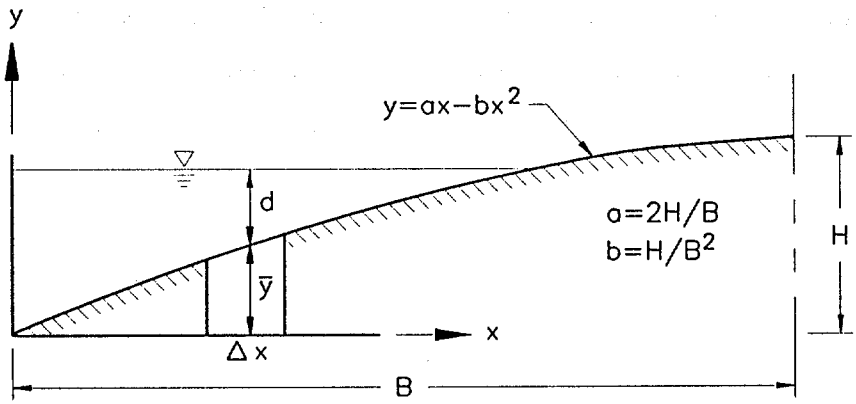


**Figure C-2. Properties of a parabolic curve.**

Column 6: Average flow depth in the first 0.6 m (2 ft) segment nearest the curb is equal to the depth at the curb minus the average rise in the segment,

$d = y - y_a$
$d = 0.0447 - 0.0117$
$d = 0.0330$ m (0.108 ft).

Similarly, the average flow depth in the second 0.6 m (2 ft) segment away from the curb is:

$d = 0.0444 - 0.0341$
$d = 0.103$ m (0.034 ft).

$$Q = K\,S^{0.5} = \frac{1.0}{n} A\,R^{0.67}\,S^{0.5}$$

$$K = \frac{1.0}{n}(\Delta x)\,d^{1.67}$$

For $n = 0.016$, and $\Delta x = 0.6$ m (2 ft):

$$K = \frac{Q}{S^{0.5}} = (37.5)\,d^{1.67}$$

Columns 7, 8 and 9 are computed in the same manner as columns 4, 5, 6.

The same analysis is repeated for other spreads equal to the half section width or for depths equal to the curb heights, for curb heights < H.

Results of the analyses for spreads of 2.4 to 7.2 m are shown in table C-3. The results of the computations are plotted in figure C-3. For a given spread or flow depth at the curb, the conveyance can be read from the figure and the discharge computed from the equation, $Q = KS^{0.5}$. For a given discharge and longitudinal slope, the flow depth or spread can be read directly from the figure by first computing the conveyance, $K = Q/S^{0.5}$, and using this value to enter the figure. An example is given on figure C-3.

**Table C-2. Conveyance computations, parabolic street section.**

| Distance From Curb | Vertical Rise y | Ave. Rise $Y_a$ | T = 0.6 m | | T = 1.2 m | | T = 1.8 m | |
|---|---|---|---|---|---|---|---|---|
| | | | Ave. Flow Depth, d | $d^{5/3}$ | Ave. Flow Depth, d | $d^{5/3}$ | Ave. Flow Depth, d | $d^{5/3}$ |
| (1) | (2) | (3) | (4) | (5) | (6) | (7) | (8) | (9) |
| 0 | 0 | | | | | | | |
| | | 0.0117 | 0.0117 | 0.00059 | 0.0330 | 0.00336 | 0.0523 | 0.00724 |
| 0.6 | 0.0234 | | | | | | | |
| | | 0.0341 | | | 0.0106 | 0.00050 | 0.0300 | 0.00286 |
| 1.2 | 0.0447 | | | | | | | |
| | | 0.0454 | | | | | 0.0096 | 0.00043 |
| 1.8 | 0.0640 | | | | | | | |
| | | 0.0727 | | | | | | |
| 2.4 | 0.0813 | | | | | | | |
| | | 0.0889 | | | | | | |
| 3.0 | 0.0966 | | | | | | | |
| | | 0.1032 | | | | | | |
| 3.6 | 0.1097 | | | | | | | |
| | | 0.1154 | | | | | | |
| 4.2 | 0.1209 | | | | | | | |
| | | 0.1253 | | | | | | |
| 4.8 | 0.1301 | | | | | | | |
| | | 0.1337 | | | | | | |
| 5.4 | 0.1372 | | | | | | | |
| | | 0.1398 | | | | | | |
| 6.0 | 0.1423 | | | | | | | |
| | | 0.1438 | | | | | | |
| 6.6 | 0.1454 | | | | | | | |
| | | 0.1459 | | | | | | |
| 7.2 | 0.1463 | | | | | | | |
| Sum | | | | 0.00059 | | 0.00386 | | 0.01053 |
| | $Q/S^{0.5}$ = | | 0.0227 $m^3/s$ | | 0.1482 $m^3/s$ | | 0.4043 $m^3/s$ | |

**Table C-3. Conveyance vs. spread, parabolic street section.**

| T (m) | 2.4 | 3.0 | 3.6 | 4.2 | 4.8 | 5.4 | 6.0 | 6.6 | 7.2 |
|---|---|---|---|---|---|---|---|---|---|
| d (m) | 0.081 | 0.097 | 0.110 | 0.121 | 0.130 | 0.137 | 0.142 | .0.145 | 0.146 |
| K ($m^3/s$) | 0.78 | 1.27 | 1.83 | 2.42 | 2.99 | 3.51 | 3.91 | 4.17 | 4.26 |

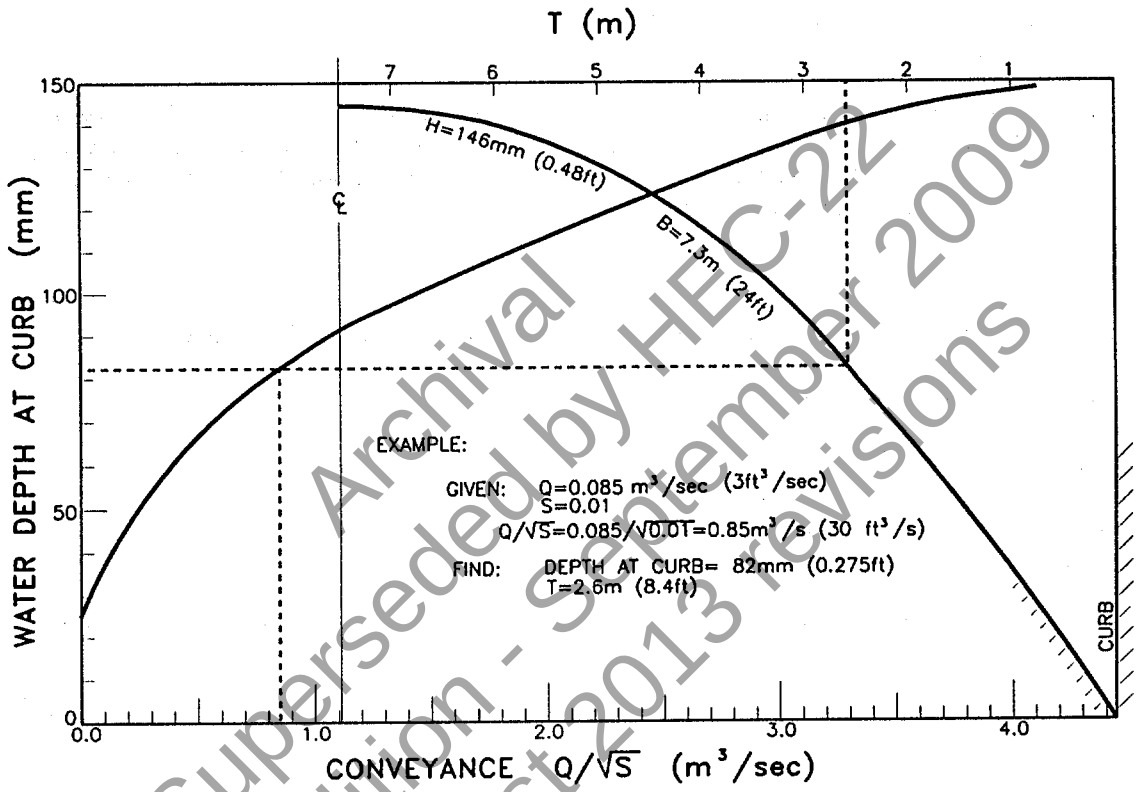


**Figure C-3. Conveyance curve for a parabolic cross section.**

## C.4 DEVELOPMENT OF SPREAD DESIGN CHARTS FOR GRATE INLETS

The following step-by-step procedure may be used to develop design curves relating intercepted flow and total gutter flow, with spread as the third variable, for a given roadway geometry, grate type and size.

***Example C-2:***

***Given:*** $S_x = 0.04$
*Grate - Type: P - 30*
*Size: 0.6 m by 0.6 m (2 ft by 2 ft)*
$n = 0.016$

***Find:*** *Develop design curves relating intercepted flow, $Q_i$, to total gutter flow, Q, for various spread widths, T. Intercepted flow is a function of total gutter flow, cross slope, and longitudinal slope, $S_L$. A discharge of 0.085 $m^3/s$ (3 $ft^3/s$) and longitudinal slope of 0.01 are used here to illustrate the development of curves.*

***Procedure:***

*Step 1: Determine spread, T, by use of chart 1 or the following form of equation C-10:*

$$T = (nQ / 0.38 S_L^{0.5})^{0.375} / S_x^{0.625}$$

*For this example, with $S_L = 0.01$,*

$$T = [(.016)(.085)/(.38)(.01)^{.5}]^{.375}/(.04)^{.625}$$
$$T = 2.14 \text{ m } (7.03 \text{ ft})$$

*Step 2: Determine the ratio, $E_o$, of the frontal flow to total flow from equation 4-16 or chart 2.*

$$W/T = 0.6/2.14 = 0.28$$
$$E_o = 1 - (1 - W/T)^{2.67} = 1 - (1 - 0.28)^{2.67}$$
$$E_o = 0.59$$

*Step 3: Determine the mean velocity from equation 4-13 or chart 4.*

$$V = 0.752/n\ S_L^{0.5}\ S_x^{0.67}\ T^{0.67} = 0.752/(0.016)\ (0.01)^{0.5}\ (0.04)^{0.67}\ (2.14)^{0.67}$$
$$V = 0.91 \text{ m/s } (3 \text{ ft/s})$$

*Step 4: Determine the frontal flow interception efficiency, $R_f$, using chart 5.*

$$R_f = 1.0$$

*Step 5: Determine the side flow interception efficiency, $R_s$, using equation 4-19 or chart 6.*

$$R_s = 1 / [1 + (0.0828\ V^{1.8}) / S_x L^{2.3}] = 1 / [1 + (0.0828)(0.91)^{1.8} / \{(0.04)(0.6)^{2.3}\}]$$
$$R_s = 0.15$$

*Step 6: Compute the inlet interception efficiency by using equation 4-20.*

$$E = R_f E_o + R_s(1 - E_o)$$
$$E = (1.0)(0.59) + (0.15)(1 - 0.59)$$
$$E = 0.65$$

*Step 7: Compute the intercepted flow.*

$$Q_i = E\,Q = 0.65(0.085)$$
$$Q_i = .055\ m^3/s\ (1.95\ ft^3/s)$$

*Step 8: Repeat steps 1 through 7 for other longitudinal slopes to complete the design curve for Q = 0.085 $m^3/s$ (3 $ft^3/s$).*

*Step 9: Repeat steps 1 through 8 for other flow rates. Curves for the grate and cross slope selected for this illustration are shown in Figures C-4 and C-5.*

---

Design curves for other grate configurations, roadway cross slopes, and gutter configurations can be developed similarly.

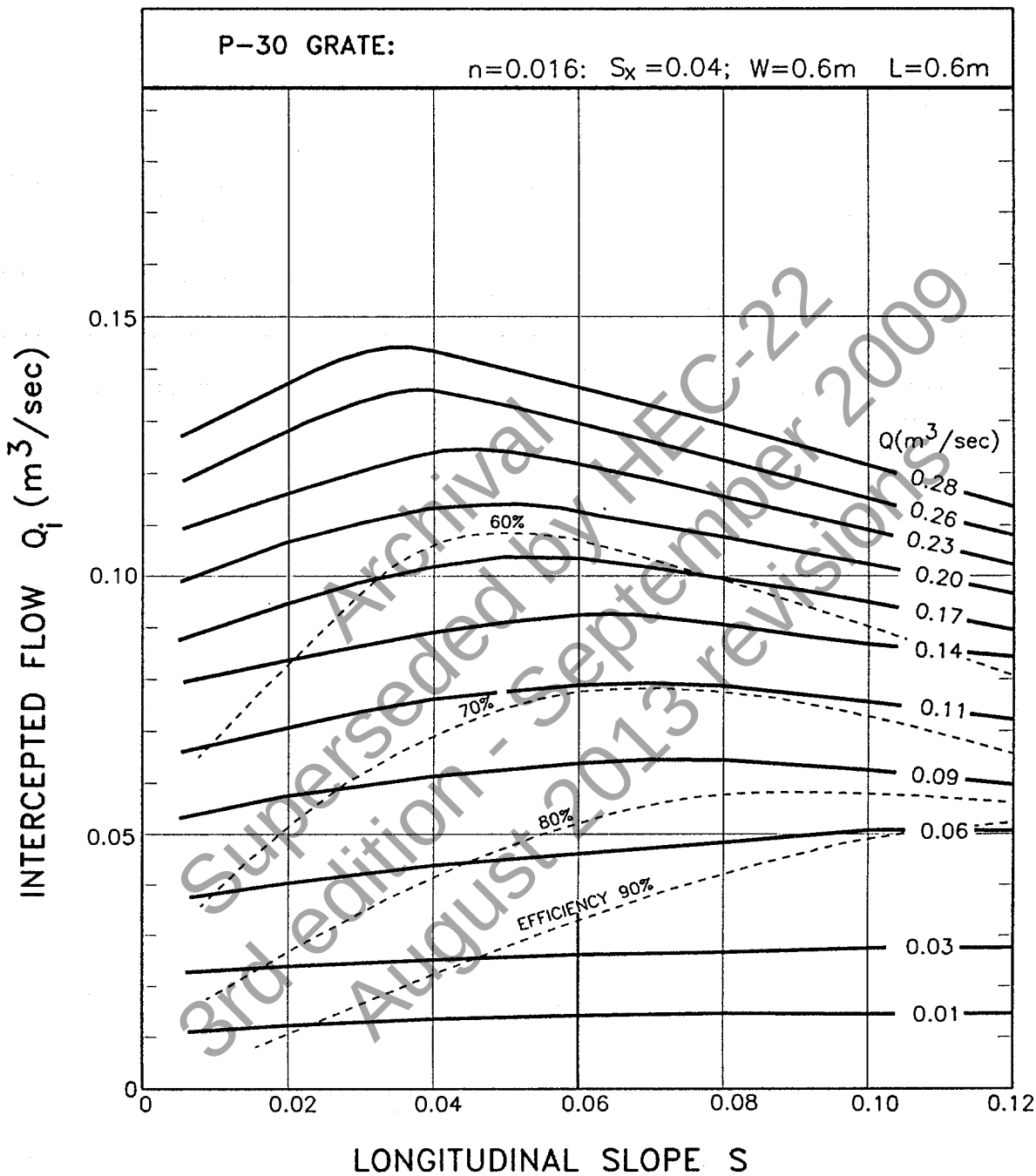




**Figure C-4. Interception capacity of a 0.6 m by 0.6 m (2 ft by 2 ft) P-30 grate.**

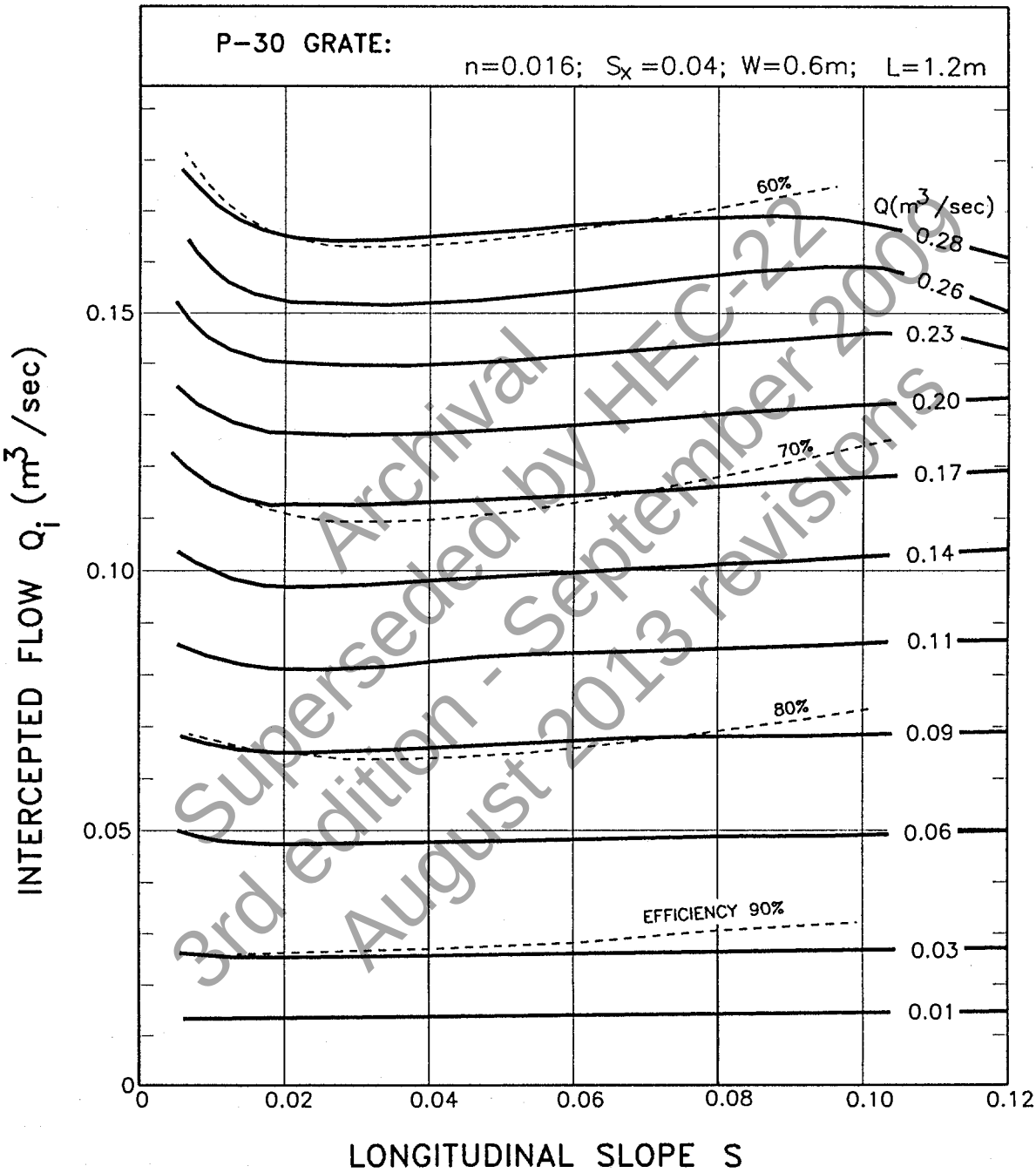




**Figure C-5. Interception capacity of a 0.6 m by 1.2 m (2 ft by 4 ft) P-30 grate.**

# APPENDIX D. ACCESS HOLE AND JUNCTION LOSSES - POWER-LOSS METHODOLOGY

The power-loss methodology was developed in response to the need for an energy loss relationship which would cover the wide range of flow conditions which occur in access holes [42]. This procedure estimates energy losses at access holes for free-surface, transitional, and pressure flows. Two-pipe, three-pipe, and four-pipe configurations were evaluated during development of the methodology.

## D.1 ENERGY LOSSES

The power-loss methodology is based on the premise that minor energy losses through an access hole can be determined using a conservation of power concept. The power entering the access hole can be equated to the sum of the outflow power and the power lost. The following equation expresses this concept.

$$\sum_{i=1}^{n} PWR_i = PWR_o + \Delta E_p \qquad \text{(D-1)}$$

where: $PWR_i$ = inflow power supplied into the access hole by each inflow line
$PWR_o$ = outflow power leaving the access hole
$\Delta E_p$ = total power lost as power passes through the access hole

and

$$\Delta E_p = \Delta E \, \gamma \, Q_o \qquad \text{(D-2)}$$

where: $\Delta E$ = total energy lost, m (ft)
$\gamma$ = specific weight of water, 9800 N/m$^3$ (62.4 lb/ft$^3$)
$Q_o$ = flow rate in outlet pipe, m$^3$/s (ft$^3$/s)

The total energy lost, $\Delta E$, can be estimated using equation D-3.

$$\Delta E = \alpha_1 \frac{V_o^2}{2g} + \sum_{i=1}^{n} \alpha_{2,i} \frac{Q_i}{Q_o} \frac{V_i^2}{2g} + \sum_{j=1}^{m} \alpha_{3,j} \frac{Q_j}{Q^o} (Z_j + d_j + d_{mh}) + \sum_{j=1}^{m} \alpha_{4,j} \frac{Q_j}{Q_o} \frac{V_j^2}{2g} \qquad \text{(D-3)}$$

where: $\alpha_1$ = contraction-loss coefficient
$\alpha_{2,i}$ = expansion-loss coefficient for each submerged inflow pipe, i
$\alpha_{3,j}$ = potential-loss coefficient for plunging inflow pipe, j
$\alpha_{4,j}$ = expansion-loss coefficient for each plunging inflow pipe, j

The estimated energy losses through the access hole can be subdivided into four components as represented in equation D-3. For each loss component, an alpha coefficient accounts for variability in the physical configuration of the junction. The alpha coefficients are defined in the following sections.

### D.1.1 Contraction-Loss Coefficient - ($\alpha_1$)

The first term in equation D-3 attempts to account for the loss created when the expanded flow within the access hole contracts into the outlet pipe. The contraction loss coefficient ($\alpha_1$) is computed using equation D-4.

$$\alpha_1 = 0.026\ C_1C_2C_3\ f \qquad \text{(D-4)}$$

where: $C_1$, $C_2$, $C_3$ = empirically derived coefficients that quantify portions of the energy loss based on the physical configuration of the access hole

$f$ = floor-configuration coefficient (table D-1)

The coefficients $C_1$, $C_2$, $C_3$, and f are described as follows. The $C_1$ coefficient is related to the relative diameter of the access hole and is expressed as follows:

$$C_1 = \left(\frac{b}{D_o}\right)^{0.55} \qquad \text{(D-5)}$$

where: $b$ = access hole diameter, m (ft)

$D_o$ = outlet pipe diameter, m (ft)

In equation D-5, the maximum $b/D_o$ value is fixed at 5.0 for a maximum $C_1$ value of 2.4. For values of $b/D_o$ greater than 5.0, the effects of expanded flow contracting into the outlet pipe are considered to have reached a maximum.

The $C_2$ coefficient is related to the outlet hydraulic grade line, and is computed as follows:

$$C_2 = 4.5 - 2\left(\frac{HGL_o}{D_o}\right)^{0.25} \qquad \text{(D-6)}$$

where: $HGL_o$ = the hydraulic grade line elevation relative to the outlet pipe invert, m (ft)

Equation D-6 is valid in the range where $HGL_o/D_o$ is greater than 1.0 and less than 6.0. Below this range, $C_2$ is fixed at 1.0. For values greater than 6.0, $C_2$ is set to 1.3.

The $C_3$ coefficient represents a loss term that accounts for access hole size relative to the outflow velocity head and is expressed by equation D-7.

$$C_3 = \left(\frac{2gb}{V_o^2}\right)^{0.5} \qquad \text{(D-7)}$$

Equation D-7 is valid only in cases where $b/D_o$ is greater than 2.0 and $(b/(V_o^2/2g))$ is less than 200. For $b/(V_o^2/2g)$ values greater than 200, $C_3$ is fixed at a value of 14. When $b/D_o$ is less than 2, the outlet pipe diameter and the access hole diameter are similar in size and flow contraction is negligible. In this case $C_3$ is set equal to 1.0.

Table D-1 gives values for f for various access hole floor configurations. Figure 7-7 illustrates the floor configurations identified in table D-1.

**Table D-1. Benched floor coefficients.**

| Floor Configuration | f Coefficient |
|---|---|
| Level (flat) | 1.00 |
| Depressed | 1.12 |
| Benched (half, full, improved) | 1.00 |

### D.1.2 Expansion-Loss Coefficient for Submerged Pipes - ($\alpha_{2,i}$)

The second term in equation D-3 accounts for the expansion loss into an access hole for a submerged inflow pipe. The expansion loss coefficient can be computed using equation D-8.

$$\alpha_{2,1} = 0.054\ C_1C_2C_3\ f\ \beta \tag{D-8}$$

where: $C_1$, $C_2$, $C_3$ = empirically derived coefficients that quantify portions of the energy loss based on the access hole configuration
$\beta$ = inflow-angle adjustment coefficient
f = floor configuration coefficient (table D-1)

The $C_1$ coefficient is identical to the $C_1$ coefficient formulated for the contraction loss as presented in equation D-5. The $C_2$ coefficient has the same form as equation D-6, but uses access hole depth relative to the inflow pipe diameter as the determining variable as represented by equation D-9.

$$C_2 = 4.5 - 2\left(\frac{d_{mho}}{D_i}\right)^{0.25} \tag{D-9}$$

where: $d_{mhi}$ = water depth in access hole relative to the inlet pipe invert, m (ft)

The equation representing $C_3$ is similar in form to equation D-7 and is expressed as indicated by equation D-10.

$$C_3 = \left(\frac{2gb}{V_i^2}\right)^{0.5} \tag{D-10}$$

The minimum and maximum limits for the equations for $C_2$ and $C_3$ are identical to the limits for the contraction loss ($\alpha_1$) coefficients.

Equation D-11 represents the adjustment coefficient for varying inflow angles.

$$\beta = \frac{(360 - \theta_1)}{180} \tag{D-11}$$

where: $\Theta$ = angle between the inflow and outflow pipes (see figure 7-5)

### D.1.3 Potential Energy-Loss Coefficient for Plunging Inflow - ($\alpha_{3,j}$)

The third term in equation D-3 accounts for the potential energy lost from an inflow line whose flow plunges into the access hole. Experimental results have yielded a constant value of 1.1 for $\alpha_{3,j}$.

### D.1.4 Expansion-Loss Coefficient for Plunging Inflow - ($\alpha_{4,j}$)

The fourth and final term in the energy-loss equation accounts for the expansion loss resulting from plunging inflow pipes. Equation D-12 provides an expression for this coefficient.

$$\alpha_{4,j} = 1.2\ \beta \tag{D-12}$$

## D.2 APPLICATION OF THE POWER-LOSS METHODOLOGY

Application of the power-loss methodology requires an iterative procedure for the solution of equation D-1. The inflow power is computed through application of the following equation:

$$\sum_{i=1}^{n} PWR_i = \alpha \sum_{i=1}^{n} Q_i\ HGL_i \tag{D-13}$$

where: $i$ = index representing an inflow pipe, submerged or plunging
$HGL_i$ = hydraulic grade line elevation at the inflow pipe

The outflow power is computed as follows:

$$PWR_o = \alpha\ Q_o\ HGL_o \tag{D-14}$$

where: $HGL_o$ = hydraulic grade line elevation at the outflow pipe

The power loss in the access hole is computed using equations D-2 and D-3.

The solution of equation D-1 involves selection of an initial value of the depth of flow in the access hole, $d_{mho}$, and computation of the inflow power, outflow power, and the power loss in the access hole until the equality is achieved. Computation of losses using equations D-4 through D-12 are dependent on the initial value of $d_{mho}$ selected, and the adjusted $d_{mho}$ values determined during the iterative processes.

The power-loss methodology requires execution of a complex series of iterative computations. This procedure is further complicated by the fact that during the iterative process, it is possible for inflow pipes to fluctuate from being submerged to plunging and vice versa. This fluctuation alters the computational procedure for determining the energy loss since components of the energy loss are dependent on the submerged or plunging status of the inflow pipes.

Due to its complex iterative nature, the Power-loss methodology is not conveniently adaptable to hand computations. However, the methodology is readily adaptable to computer solution, and is implemented in HYDRA [43].

# APPENDIX E. GLOSSARY

| | | |
|---|---|---|
| access holes | - | Access structures and alignment control points in storm drainage systems. |
| air/vacuum valves | - | Valves that provide for both the intake and exhaustion of air on pressure from lines. |
| axial flow pumps | - | Pumps that lift the water up a vertical riser pipe; flow is parallel to the pump axis and drive shaft; commonly used for low head, high discharge applications. |
| basin development | - | A highly significant parameter in the urban factor (BDF) equations of peak flow from watershed determinations. It provides a measure of the efficiency of the drainage basin and the extent of urbanization. |
| bench | - | The elevated bottom of an access hole on either side of the flow channel. |
| bypass flow | - | Flow which bypasses an inlet on grade and is carried in the street or channel to the next inlet downgrade. |
| check storm | - | A lesser frequency event used to assess hazards at critical locations. |
| check valves | - | Water tight valves used to prevent backflow. |
| combination inlets | - | Use of both a curb opening inlet and a grate inlet. |
| convolution | - | The process or using the unit hydrograph to determine the direct runoff hydrograph from the excess rainfall hydrograph. |
| cover | - | Distance from the outside top of the pipe to the final grade of the ground surface. |
| critical flow | - | Flow in an open channel that is at minimum specific energy and has a Froude number equal to 1.0. |
| critical depth | - | Depth of flow during critical flow. |
| cross slope | - | The rate of change of roadway elevation with respect to distance perpendicular to the direction of travel. Also known as transverse slope. |
| crown | - | The inside top elevation of a conduit. |
| curb-opening inlet | - | A discontinuity in the curb structure which is covered by a top slab. |
| detention time | - | The time required for a drop water to pass through a detention facility when the facility is filled to design capacity. |
| direct runoff | - | The streamflow produced in response to a rainfall event and is equal to total stream flow minus baseflow. |

| | | |
|---|---|---|
| drainage inlets | - | The receptors for surface water collected in ditches and gutters, which serve as the mechanism whereby surface water enters storm drains; refers to all types of inlets such as grate inlets, curb inlets, slotted inlets, etc. |
| dry-pit stations | - | Pump stations that use both a wet well and a dry well. Storm water is stored in the wet well which is connected to the dry well by horizontal suction piping. The storm water pumps are located on the floor of the dry well. |
| emergency spillway | - | Structure designed to allow controlled release of storm flows in excess of the design discharge from a detention facility. |
| equivalent cross slope | - | An imaginary straight cross slope having a conveyance capacity equal to that of the given compound cross slope. |
| extended detention dry ponds | - | Depressed basins that temporarily store a portion of the stormwater runoff following a storm event. The extended detention time of the stormwater provides an opportunity for urban pollutants carried by the flow to settle out. |
| flanking inlets | - | Inlets placed on either side of a low point inlet. Flanking inlets limit the spread of water onto the roadway if the low point inlet becomes clogged or is exceeded in its capacity. |
| flap gates | - | A gate which restricts water from flowing back into the discharge pipe and discourages entry into the outfall line. |
| flow line | - | The bottom elevation of an open channel or closed conduit. |
| gate valves | - | Shut-off devices used on pipe lines to control flow. These valves should not be used to throttle flow. They should be either totally open or totally closed. |
| grate inlets | - | Parallel and/or transverse bars arranged to form an inlet structure. |
| gutters | - | Portion of the roadway structure used to intercept pavement runoff and carry it along the roadway shoulder. |
| hydraulic grade line (HGL) | - | A line coinciding with the level of flowing water in an open channel. In a closed conduit flowing under pressure, the HGL is the level to which water would rise in a vertical tube at any point along the pipe. It is equal to the energy gradeline elevation minus the velocity head, $V^2/2g$. |
| hydraulic jump | - | A flow discontinuity which occurs at an abrupt transition from subcritical to supercritical flow. |

hydraulic radius - The hydraulic radius is the cross sectional area of the flow divided by the wetted perimeter. For a circular pipe flowing full, the hydraulic radius is one-fourth of the diameter. For a wide rectangular channel, the hydraulic radius is approximately equal to the depth.

hydrograph - A plot of flow versus time.

hydrologic abstractions - Losses of rainfall that do not contribute to direct runoff. These losses include water retained in surface depressions, water intercepted by vegetation, evaporation, and infiltration.

hydroplaning - Separation of the vehicle tire from the roadway surface due to a film of water on the roadway surface.

hyetographs - A plot of rainfall intensity vs. time for a specific rainfall event. It is typically plotted in the form of a bar graph.

infiltration trenches - Shallow excavations which have been backfilled with a coarse stone media. The trench forms an underground reservoir which collects runoff and exfiltrates it to the subsoil.

intensity - The rate of rainfall typically given in units of millimeters per hour (inches per hour).

invert - The inside bottom elevation of a closed conduit.

Intensity-Duration-Frequency Curves - IDF curves provide a summary of a site's rainfall characteristics by relating storm duration and exceedence probability (frequency) to rainfall intensity (assumed constant over the duration).

infiltration basins - An excavated area which impounds stormwater flow and gradually exfiltrates it through the basin floor.

junction boxes - Formed control structures used to join sections of storm drains.

longitudinal slope - The rate of change of elevation with respect to distance in the direction of travel or flow.

major system - This system provides overland relief for stormwater flows exceeding the capacity of the minor system and is composed of pathways that are provided, knowingly or unknowingly, for the runoff to flow to natural or manmade receiving channels such as streams, creeks, or rivers.

mass rainfall curve - The cumulative precipitation plotted over time.

minor system - This system consists of the components of the storm drainage system that are normally designed to carry runoff from the more frequent storm events. These components include: curbs, gutters, ditches, inlets, manholes, pipes and other conduits, open channels, pumps, detention basins, water quality control facilities, etc.

| | | |
|---|---|---|
| mixed flow pumps | - | Mixed flow pumps are very similar to axial flow except they create head by a combination of lift and centrifugal action. An obvious physical difference is the presence of the impeller "bowl" just above the pump inlet. |
| open channel | - | A natural or manmade structure that conveys water with the top surface in contact with the atmosphere. |
| open channel flow | - | Flow in an open conduit or channel that is driven by gravitational forces. |
| orifice flow | - | Flow of water into an opening that is submerged. The flow is controlled by pressure forces. |
| permissible shear stress | - | Defines the force required to initiate movement of the channel bed or lining material. |
| power loss methodology | - | A method used to determine the energy lost at an access hole or junction box during a storm drainage design procedure. |
| pressure flow | - | Flow in a conduit that has no surface exposed to the atmosphere. The flow is driven by pressure forces. |
| radial flow pumps | - | Pumps that utilize centrifugal force to move water up the riser pipe. They will handle any range of head and discharge, but are the best choice for high head applications. Radial flow pumps generally handle debris quite well. |
| retention/detention facilities | - | Facilities used to control the quantity, quality, and rate of runoff discharged to receiving waters. Detention facilities control the rate of outflow from the watershed and typically produce a lower peak runoff rate than would occur without the facility. Retention facilities capture all of the runoff from the watershed and use infiltration and evaporation to release the water from the facility. |
| routing | - | The process of transposing an inflow hydrograph through a structure and determining the outflow hydrograph from the structure. |
| sand filters | - | Filters that provide stormwater treatment when runoff is strained through a sand bed before being returned to a stream or channel. |
| scupper | - | A small opening (usually vertical) in the deck, curb, or barrier through which water can flow. |
| shallow concentrated flow | - | Flow that has concentrated in rills or small gullies. |
| shear stress | - | Stress on the channel bottom caused by the hydrodynamic forces of the flowing water. |
| sheet flow | - | A shallow mass of runoff on a planar surface or land area in the upper reaches of a drainage area. |

slotted inlets - A section of pipe cut along the longitudinal axis with transverse bars spaced to form slots.

specific energy - The energy head relative to the channel bottom.

spread - A measure of the transverse lateral distance from the curb face to the limit of the water flowing on the roadway.

steady flow - Flow that remains constant with respect to time.

Stochastic methods - Frequency analysis used to evaluate peak flows where adequate gaged stream flow data exist. Frequency distributions are used in the analysis of hydrologic data and include the normal distribution, the log-normal distribution, the Gumbel extreme value distribution, and the log-Pearson Type III distribution.

storm drain - A particular storm drainage system component that receives runoff from inlets and conveys the runoff to some point. Storm drains are closed conduits or open channels connecting two or more inlets.

storm drainage systems - Systems which collect, convey, and discharge stormwater flowing within and along the highway right-of-way.

subcritical flow - Flow characterized by low velocities, large depths, mild slopes, and a Froude number less than 1.0.

supercritical flow - Flow characterized by high velocities, shallow depths, steep slopes, and a Froude number greater than 1.0.

synthetic rainfall events - Artificially developed rainfall distribution events.

time of concentration - The time for runoff to travel from the hydraulically most distant point in the watershed to a point of interest within the watershed. This time is calculated by summing the individual travel times for consecutive components of the drainage system.

total dynamic head - The combination of static head, velocity head, and various head losses in the discharge system caused by friction, bends, obstructions, etc.

tractive force - Force developed by the channel bottom to resist the shear stress caused by the flowing water.

unit hydrograph - The direct runoff hydrograph produced by a storm of given duration such that the volume of excess rainfall and direct runoff is 1 cm.

uniform flow - Flow in an open channel with a constant depth and velocity along the length of the channel.

unsteady flow - Flow that changes with respect to time.

| | | |
|---|---|---|
| varied flow | - | Flow in an open channel where the flow rate and depth change along the length of the channel. |
| water quality inlets | - | Pre-cast storm drain inlets (oil and grit separators) that remove sediment, oil and grease, and large particulates from paved area runoff before it reaches storm drainage systems or infiltration BMPs. |
| weir flow | - | Flow over a horizontal obstruction controlled by gravity. |
| wet-pit stations | - | Pump stations designed so that the pumps are submerged in a wet well or sump with the motors and the controls located overhead. |
| wet ponds | - | A pond designed to store a permanent pool during dry weather. |
| wetted perimeter | - | The wetted perimeter is the length of contact between the flowing water and the channel at a specific cross section. |

## APPENDIX F. REFERENCES


1. Federal Highway Administration, 1978. Hydraulics of Bridge Waterways. Hydraulic Design Series No. 1, Washington, D.C.

2. Normann, J. M., Houghtalen, R. J., and Johnston, W. J., 1985. Hydraulic Design of Highway Culverts. Hydraulic Design Series No. 5, Federal Highway Administration, McLean, VA.

3. American Association of State Highway and Transportation Officials, 1992. Highway Drainage Guidelines. "Vol. IV: Hydraulic Design of Highway Culverts." AASHTO, Inc., Washington, D.C.

4. American Association of State Highway and Transportation Officials, 1992. Highway Drainage Guidelines. "Vol. VII: Hydraulic Analysis for the Location and Design of Bridges." AASHTO, Inc., Washington, D.C.

5. Moulton, L. K., 1980. Highway Subdrainage Design. Federal Highway Administration Publication No. FHWA-TS-80-224, Washington, D.C.

6. McCuen, R. H., Johnson, P. A., and Ragan, R. M., 1995. Hydrology. Hydraulic Design Series No. 2, Federal Highway Administration, McLean, VA. (to be published).

7. Federal Highway Administration, 1996. Introduction to Highway Hydraulics. Hydraulic Design Series No. 4, Washington, D.C. (to be published).

8. American Society of Civil Engineers, 1992. Design and Construction of Urban Stormwater Management Systems. "ASCE Manuals and Reports of Engineering Practice No. 77, WEF Manual of Practice FD-20." New York, N.Y.

9. American Association of State Highway and Transportation Officials, 1991. Model Drainage Manual. "Chapter 4: Documentation," Washington, DC.

10. American Association of State Highway and Transportation Officials, 1992. Highway Drainage Guidelines. "Volume V: Legal Aspects of Highway Drainage," AASHTO, Inc., Washington, D.C.

11. American Association of State Highway and Transportation Officials, 1991. Model Drainage Manual. "Chapter 2: Legal Aspects," Washington, DC.

12. American Public Works Association Research Foundation and the Institute for Water Resources, 1981. Urban Stormwater Management. Special Report No. 49, American Public Works Association, Washington, D.C.

13. Soil Conservation Service, 1986. Urban Hydrology for Small Watersheds. Technical Release No. 55, U.S. Department of Agriculture.

14. American Society of Civil Engineers, 1960. Design Manual for Storm Drainage. New York, New York.

15. M.E. Jennings, W.O. Thomas, Jr., and H.C. Riggs, 1994. Nationwide Summary of U.S. Geological Survey Regional Regression Equations for Estimating Magnitude and Frequency of Floods for Ungaged Sites, 1993. US Geological Survey, Water-Resources Investigations Report 94-4002, prepared in cooperation with the Federal Highway Administration and the Federal Emergency Management Agency, Reston, Virginia.

16. V.B. Sauer, W.O. Thomas, Jr., V.A. Stricker, and K.V. Wilson, 1983. Flood Characteristics of Urban Watersheds in the United States. Prepared in cooperation with U.S. Department of Transportation, Federal Highway Administration, U.S. Geological Survey Water-Supply Paper 2207.

17. V.B. Sauer, 1989. Dimensionless Hydrograph Method of Simulating Flood Hydrographs. Preprint, 68th Annual Meeting of the Transportation Research Board, Washington, D.C., (January) pp. 22-26.

18. American Association of State Highway and Transportation Officials, 1991. Model Drainage Manual. "Chapter 13: Storm Drainage Systems.", AASHTO, Washington, D.C.

19. Johnson, F.L. and F.M. Chang, 1984. Drainage of Highway Pavements. Hydraulic Engineering Circular No. 12, Federal Highway Administration, Washington, D.C.

20. Anderson, D. A., Reed, J. R., Huebner, R. S., Henry, J. J., Kilareski, W. P., and Warner, J. C. 1995. Improved Surface Drainage of Pavements. NCHRP Project I-29, The Pennsylvania Transportation Institute, The Pennsylvania State University, Federal Highway Administration, Washington, D.C.

21. American Association of State Highway and Transportation Officials, 1990. A Policy on Geometric Design of Highways and Streets. AASHTO, Washington, D.C.

22. Gallaway, B.C., et al, December 1979. Pavement and Geometric Design Criteria for Minimizing Hydroplaning. Texas Transportation Institute, Texas A&M University, Federal Highway Administration, Report No. FHWA-RD-79-30, A Technical Summary.

23. Young, G.K. Walker, S.E., and Chang, F., 1993. Design of Bridge Deck Drainage. Publication number FHWA-SA-92-010, Federal Highway Administration, Washington, D.C.

24. Izzard, C.F., 1946. Hydraulics of Runoff from Developed Surfaces. Proc. Highway Research Board, Volume 26, p. 129-150, Highway Research Board, Washington, D.C.

25. Burgi, P.H., D.E. Gober, June 1977. Bicycle-Safe Grate Inlets Study, Volume 1 - Hydraulic and Safety Characteristics of Selected Grate Inlets on Continuous Grades. Report No. FHWA-RD-77-24, Federal Highway Administration.

26. Burgi, P.H., May 1978. Bicycle-Safe Grate Inlets Study, Volume 2 - Hydraulic Characteristics of Three Selected Grate Inlets on Continuous Grades. Report No. FHWA-RD-78-4, Federal Highway Administration.

27. Burgi, P.H., September 1978. Bicycle-Safe Grate Inlets Study, Volume 3 - Hydraulic Characteristics of Three Selected Grate Inlets in a Sump Condition. Report No. FHWA-RD-78-70, Federal Highway Administration.

28. Pugh, C.A., February 1980. Bicycle-Safe Grate Inlets Study, Volume 4 - Hydraulic Characteristics of Slotted Drain Inlets. Report No. FHWA-RD-79-106, Federal Highway Administration.

29. Bauer, W.J. and Woo, D.C., 1964. Hydraulic Design of Depressed Curb-Opening Inlets. Highway Research Record No. 58, Highway Research Board, Washington, D.C.

30. FHWA, Bicycle-Safe Grate Inlets Study, Vol. 1 & Vol. 2, June 1977 and April 1978, Final Report. Hydraulic and Safety Characteristics of Selected Grate Inlets on Continuous Grades. Report No. FHWA-RD-77-4.

31. Chow, V.T., 1959. Open-Channel Hydraulics. McGraw-Hill, New York, 1959.

32. Richardson, E.V., D.B. Simons, and P.Y. Julien, 1990. Highways in the River Environment. Prepared for the Federal Highway Administration, Washington, D.C. by the Department of Civil Engineering, Colorado State University, Fort Collins, Colorado.

33. AASHTO Task Force on Hydrology and Hydraulics, 1991. Model Drainage Manual. "Chapter 8 : Channels," American Association of State Highway and Transportation Officials, Washington, D.C.

34. Chang, Dr. Y. H., and G. K. Cotton, 1988. Design of Roadside Channels with Flexible Linings. Hydraulic Engineering Series No. 15, Publication No. FHWA-IP-87-7, Prepared for the U.S. Department of Transportation, Federal Highway Administration, Washington, D.C.

35. Federal Highway Administration, 1983. Hydraulic Design of Energy Dissipators. Hydraulic Engineering Circular No. 14, U.S. Department of Transportation, Washington, D.C.

36. Federal Highway Administration, 1977 reprint. Design Charts for Open-Channel Flow. Hydraulic Design Series No. 3, U.S. Department of Transportation, Washington, D.C.

37. American Society of Civil Engineers and the Water Pollution Control Federation, 1986. Design and Construction of Sanitary and Storm Sewers. ASCE Manuals and Reports of Engineering Practice No. 37, WPCF Manual of Practice No. 9, American Society of Civil Engineers, New York, New York, and Water Pollution Control Federation, Washington, DC.

38. American Association of State Highway and Transportation Officials, 1991. Model Drainage Manual. "Chapter 9: Culverts.", AASHTO, Washington, D.C.

39. American Iron and Steel Institute, 1990. Modern Sewer Design. AISI, Washington, D. C.

40. Federal Highway Administration, Revised 1993. Urban Drainage Design Participant Notebook, Course No. 13027. United States Department of Transportation, Federal Highway Administration, National Highway Institute Publication No. FHWA HI-89-035, Washington, D.C.

41. Federal Highway Administration, 1986. Culvert Inspection Manual. FHWA-IP-86-2, U.S. Department of Transportation, Federal Highway Administration, McKlean, VA.

42. Chang, F. M., Kilgore, R. T., et. al., 1994. Energy Losses through Junction Manholes. "Volume I: Research Report and Design Guide," U.S. Department of Transportation, Federal Highway Administration, McKlean, VA.

43. GKY & Associates, 1994. HYDRAIN -Integrated Drainage Design Computer System; Version 5.0. "Volume III: HYDRA - Storm Drains," FHWA-RD-92-061, U.S. Department of Transportation, Federal Highway Administration, McKlean, VA.

44. American Iron and Steel Institute, 1983. Handbook of Steel Drainage and Highway Construction Products. AISI, Washington, D. C.

45. American Concrete Pipe Association, 1978. Concrete Pipe Design Manual. ACPA, Washington, D. C.

46. Federal Highway Administration, 1979. Underground Disposal of Stormwater Runoff. Design Guidelines Manual FHWA-TS-80-218, Federal Highway Administration, Washington, D.C.

47. Boyd, M. J., 1981. Preliminary Design Procedures for Detention Basins. *Proceedings*. Second International Conference on Urban Storm Drainage, Urbana, IL.

48. Wycoff, R.L. and U.P. Singh, 1986. Preliminary Hydrologic Design of Small Flood Detention Reservoirs. Water Resources Bulletin, Vol. 12, No. 2.

49. Brater, E. F. and H.W. King, 1976. Handbook of Hydraulics. 6th ed., McGraw Hill Book Company, New York, NY.

50. Sandvik, A., 1985. Proportional Weirs for Stormwater Pond Outlets. *Civil Engineering*, American Society of Civil Engineers, New York, NY.

51. U.S. Department of Agriculture - Soil Conservation Service, 1969. Standards and Specifications for Soil Erosion and Sediment Control in Urbanizing Areas. College Park, MD.

52. Lever, W. F., 1982. Manual for Highway Storm Water Pumping Stations. Volume 1 & 2, FHWA-IP-82-17, PB 84-152727 and 152735, U.S. Department of Transportation, Federal Highway Administration, Washington, D.C.

53. Flygt. "Cost Savings In Pumping Stations".

54. "Hydraulic Institute Engineering Data Book", Hydraulic Institute, Cleveland, OH.

55. "Hydraulic Institute Standards for Vertical Turbine Pumps", Hydraulic Institute, Cleveland, OH.

56. American Association of State Highway and Transportation Officials, 1992. Highway Drainage Guidelines. "Vol. III: Erosion and Sediment Control in Highway Construction." AASHTO, Inc., Washington, D.C.

57. V.P. Malhotra and J.M. Normann, 1994. Best Management Practices Computer Model. SDN Water Resources.

58. T.R. Shueler, 1987. Controlling Urban Runoff: A Practical Manual for Planning and Designing Urban BMP's. Metropolitan Council of Governments, Washington, DC.

59. American Association of State Highway and Transportation Officials, 1991. Model Drainage Manual. "Chapter 15: Surface Water Environment," Washington, DC.

60. R.J. Hicks, et al., November 1993. Memorandum: Development of Consistent Stormwater Management Water Quality Criteria. Commonwealth of Virginia, Department of Conservation and Recreation.

61. E.D. Driscoll, April 1990. Pollutants Loadings and Impacts from Highway Stormwater Runoff; Volume II. FHWA/RD-88-007, Woodward-Clyde Consultants, Federal Highway Administration, Washington, DC.

62. Occoquan Watershed Monitoring Laboratory (OWML), 1983. Final Contract Report: Washington Area NURP Project. Prepared for Metropolitan Washington Council of Governments, Manassas, Virginia.

63. Occoquan Watershed Monitoring Laboratory (OWML), 1986. 1986a Interim Progress Report, Loudoun Commons Extended Detention Pond Monitoring Study. Prepared for the Virginia Department of Conservation and Historic Resources, Richmond, Virginia.

64. M.E. Dorman, et al., March 1988. Retention, Detention and Overland Flow for Pollutant Removal from Highway Stormwater Runoff: Interim Guidelines for Management Measures. FHWA/RD-87/056, Federal Highway Administration, McLean, Virginia.

65. G.K. Young and F.R. Graziano, August 1989. Outlet Hydraulics of Extended Detention Facilities. Prepared for the Northern Virginia Planning District Commission, Annandale, Virginia.

66. Northern Virginia Planning District Commission, 1987. BMP Handbook for the Occoquan Watershed. Annandale, Virginia.

67. T.R. Shueler, March 1992. A Current Assessment of Urban Best Management Practices. Metropolitan Council of Governments, Washington, DC.

68. GKY and Associates, Inc., 1991. BMP Facilities Manual. Rappahannock Area Development Commission, Fredericksburg, Virginia (September).

69. S.L. Yu and R.J. Kaghn, January 1992. VDOT Manual of Practice for Planning Stormwater Management. Virginia Transportation Research Council, Charlottesville, Virginia.

70. City of Alexandria, Virginia, 1992. Alexandria Supplement to the Northern Virginia BMP Handbook. Department of Transportation and Environmental Protection, Alexandria, Virginia.

71. F.J. Galli, 1990. The Peat Sand Filter: An Innovative BMP for Controlling Urban Stormwater. Anacostia Restoration Team, Washington, DC.

72. Washington State Department of Transportation, February 1995. Highway Runoff Manual.

73. R.R. Horner, 1988. Biofiltration Systems for Storm Runoff Water Quality Control. Prepared for Washington State Department of Ecology.

74. R. Lowrance, et al., 1984. Riparian Forests as Nutrient Fillers in Agricultural Watersheds. BioScience 34(6).

75. E.W. Stricker, et al., 1992. The Use of Wetlands for Controlling Stormwater Pollution. Woodward-Clyde Consultants for the Terrene Institute, Washington, DC (April).

76. Virginia Erosion and Sediment Control Handbook, 1980. Division of Soil and Water Conservation, Virginia Department of Conservation and Historic Resources, Richmond, Virginia.

77. G.K. Young and J.S. Krolak, 1993. HYDRAIN-Integrated Drainage Design Computer System, Version 5.0. Federal Highway Administration, McLean, Virginia.

78. Soil Conservation Service, 1982. TR-20, Project Formulation-Hydrology. Technical Release 20, Lanham, Maryland.

79. U.S. Army Corps of Engineers, 1990. HEC-1, Flood Hydrograph Package, User's Manual. Hydrologic Engineering Center, Davis, California.

80. W.C. Huber, et al., 1988. Storm Water Management Model User's Manual, Version IV. U.S. Environmental Protection Agency, Athens, Georgia.

81. L.A. Roesner, et al., 1989. Stormwater Management Model User's Manual, Version IV. EXTRAN Addendum, Athens, Georgia.

82. G. Aron, et al., 1992. Penn State Runoff Quality Model User Manual. Department of Civil Engineering, The Pennsylvania State University.

83. W.M. Alley and P.E. Smith, 1990. Distributed Routing Rainfall-Runoff Model-Version II, User's Manual. Open-File Report 82-344, United States Geological Survey, NSTL Station, Mississippi.

84. E.D. Driscoll, P.E. Shelley, and E.W. Strecker, 1990. Pollutant Loadings and Impacts from Highway Stormwater Runoff, Volumes I-IV. FHWA-RD-88-006/009, Office of Engineering and Highway Operations R&D, Federal Highway Administration, McLean, VA

85. Pennsylvania Department of Transportation, 1994. Standards for Roadway Construction. Publication No. 72, Harrisburg, Pennsylvania (March).






☆ U. S. GOVERNMENT PRINTING OFFICE: 1997-430-272/80117