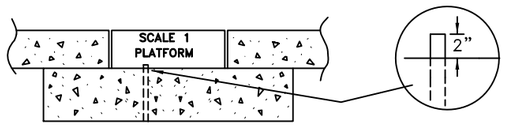

STUB UP CONDUIT 2" ABOVE FOUNDATION NEAR CENTER LINE OF SCALE (TYPICAL).

NOTES:

1. FOR LOOP INSTALLATION DETAILS SEE DRAWING KC583388.
2. THE 2" CONDUITS FROM THE WIM SCALE FRAME TO THE WIM ENCLOSURE SHOULD BE RUN AS STRAIGHT AS POSSIBLE TO FACILITATE FUTURE REPLACEMENT OF A LOAD CELL.
3. ROADWAY MUST BE CONCRETE FOR AT LEAST 150 FEET BEFORE THE WIM SCALES AND AT LEAST 150 FEET AFTER THE WIM SCALE. LANE WIDTH SHALL BE AT LEAST 12 FEET.
4. IF THE JOB SPECIFICATION REQUIRES A MINIMUM CONDUIT SIZE THAT IS LARGER THAN MINIMUM SIZE SHOWN ON THIS DRAWING THEN THE JOB SPECIFICATION MINIMUM SHALL APPLY.
5. THE ACCURACY OF A WIM SCALE IS GREATLY AFFECTED BY THE APPROACH TO THE SCALE. ANY VERTICAL MOVEMENT (BOUNCING) OF THE VEHICLE AS IT CROSSES THE WIM SCALES WILL DEGRADE THE ACCURACY OF THE SCALE. FOR THIS REASON IT IS CRITICAL THAT THE APPROACH BE AS SMOOTH AS POSSIBLE, AND IN ACCORDANCE WITH ASTM SPECIFICATIONS E1318–94.

   THE IDEAL WIM INSTALLATION IS ON STRAIGHT ROADWAY THAT IS LEVEL. THE APPROACH AND EXIT ARE CONCRETE AND ARE SMOOTH FOR A DISTANCE OF 150 FEET IN FRONT OF THE SCALE AND 150 FEET AFTER THE SCALE. THIS AREA MUST BE GROUND SMOOTH IF NECESSARY.

   THE WIM SCALES CAN BE PLACED ON A GRADE BUT THE GRADE SHOULD BE CONSTANT (AVOID VERTICAL CURVES AS THESE ARE DIFFICULT TO MAKE SMOOTH). WIM SCALES SHOULD NOT BE PLACED ON A HORIZONTAL CURVE BECAUSE VEHICLES WILL TEND TO MISS THE SCALE WITH ONE OR MORE AXLES.

   THE GRADE FROM SIDE TO SIDE (PERPENDICULAR TO THE DIRECTION OF TRAVEL) MUST BE UNIFORM FOR THE FULL WIDTH OF THE LANE AND MUST BE CONSISTENT FOR THE APPROACH AND EXIT SECTIONS.
6. THE OFF SCALE DETECTOR SHOULD BE PLACED SO THAT THERE WILL BE A GAP OF APPROXIMATELY 0.5 FEET BETWEEN THE DETECTOR AND THE SCALE FRAME. THIS IS TO AVOID CONCRETE CRACKING.

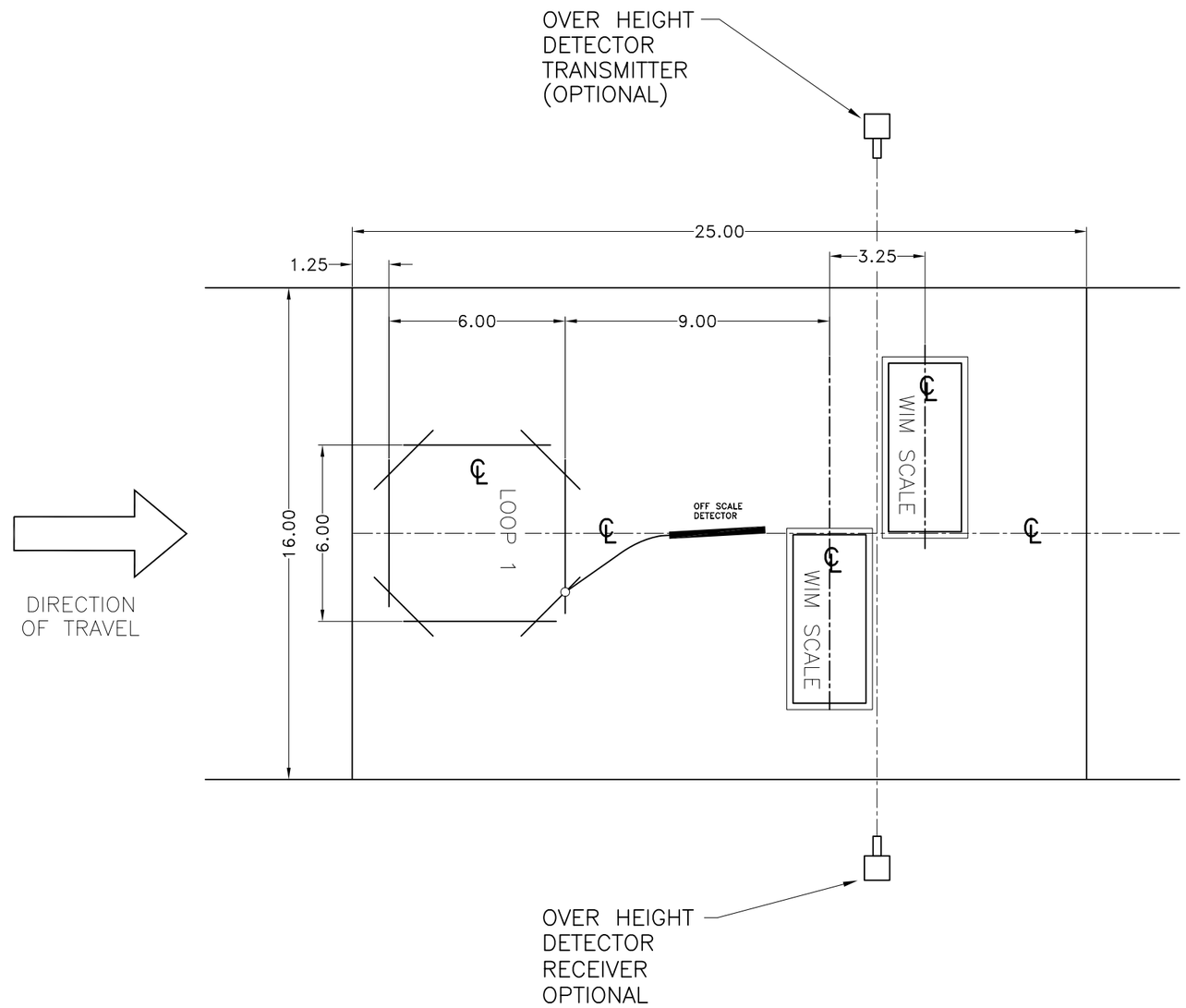

NO.	ZONE	DESCRIPTION	BY	CHK'D	APP'D	E.R. NO.	DATE
		RECORD OF CHANGES					

MATERIAL SPEC. AS SHOWN
T.S. CODE
FINISH DESCRIPTION
FINISH CODE
DIMENSION TOLERANCE UNLESS OTHERWISE SPECIFIED
.XX=±.02
.XXX=±.005
ANGULAR
FRACTIONAL
DO NOT SCALE DRWG.
ORIGINAL
SCALE 1:1
SUPERSEDES
PROJ. NO./SPEC. NO.
SUPERSEDED BY
DWG. RELEASE NO.

METTLER TOLEDO

THIS PRINT IS FURNISHED WITH UNDERSTANDING THAT THE ESSENCE THEREOF WILL NOT BE REPRODUCED IN WHOLE OR IN PART WITHOUT WRITTEN AUTHORIZATION OF METTLER-TOLEDO, INC. ALL DESIGNS ARE THE PROPERTY OF METTLER-TOLEDO, INC. AND WILL BE PROTECTED BY PATENTS.

NAME WIM DIMENSIONAL LAYOUT

DRN ROWLANDS 19-DEC-11 DSGN ROWLANDS 19-DEC-11
CHKD APPD
SHEET 1 OF 1
64088004